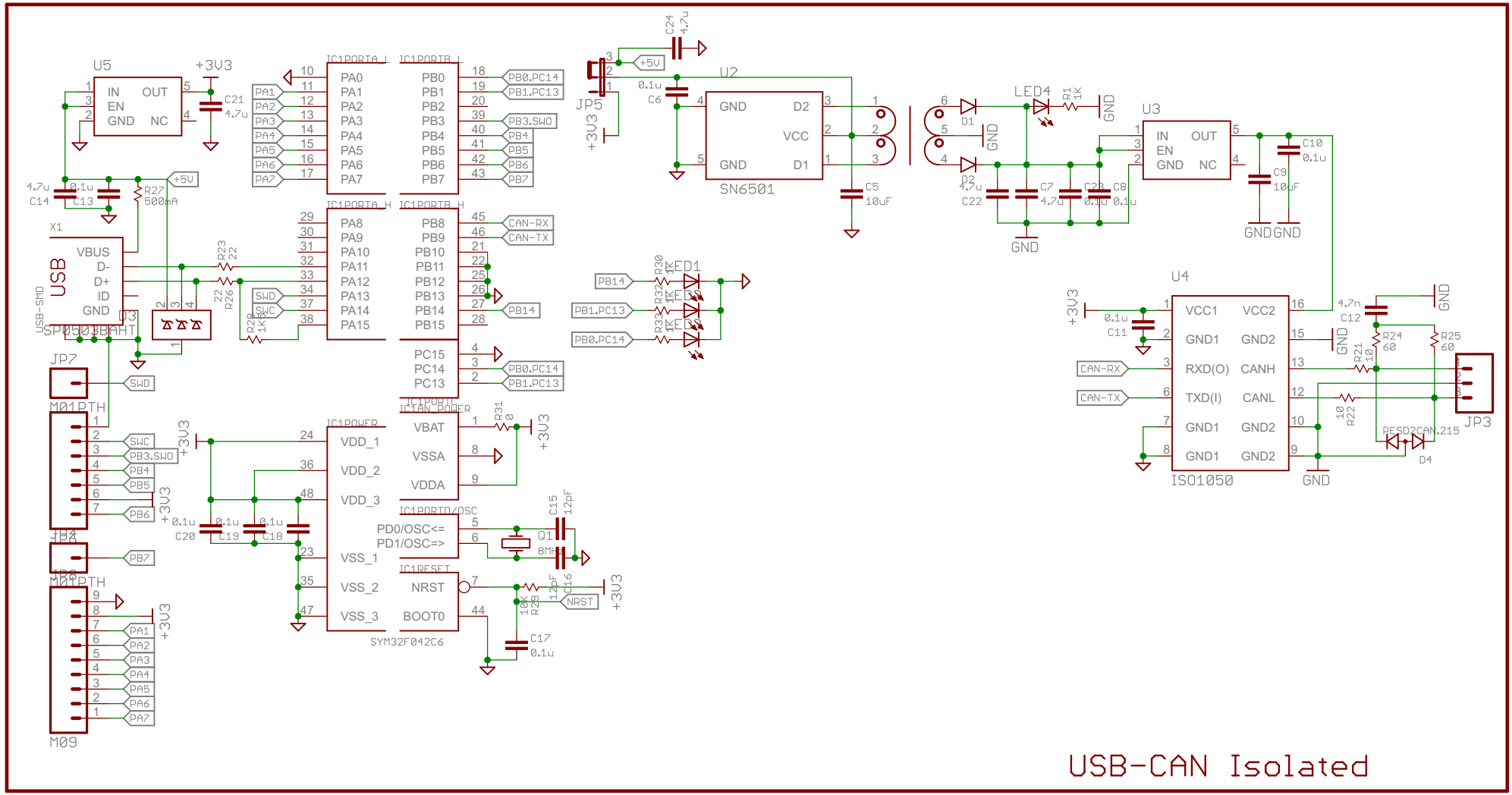
USB-CAN Isolated
U5
IN
OUT
EN
GND
NC
+3V3
C21
4.7u
C14
4.7u
C13
0.1u
R27
500mA
+5V
X1
USB
VBUS
D-
D+
ID
GND
USB-SMD
SP0503BAHT
R23
22
R26
22
R28
1K
SWD
SWC
JP7
M01PTH
JP4
M09
PA1
PA2
PA3
PA4
PA5
PA6
PA7
PB3.SWO
PB4
PB5
PB6
PB7
IC1PORTA_L
IC1PORTB_L
IC1PORTA_H
IC1PORTB_H
IC1POWER
IC1PORTC
IC1AN_POWER
IC1PORTD/OSC
IC1RESET
PA0
PA1
PA2
PA3
PA4
PA5
PA6
PA7
PA8
PA9
PA10
PA11
PA12
PA13
PA14
PA15
PB0
PB1
PB2
PB3
PB4
PB5
PB6
PB7
PB8
PB9
PB10
PB11
PB12
PB13
PB14
PB15
PC15
PC14
PC13
PB0.PC14
PB1.PC13
CAN-RX
CAN-TX
VDD_1
VDD_2
VDD_3
VSS_1
VSS_2
VSS_3
VBAT
VSSA
VDDA
PD0/OSC<=
PD1/OSC=>
NRST
BOOT0
SYM32F042C6
R31
0
C20
0.1u
C19
0.1u
C18
0.1u
C15
12pF
Q1
8MHz
R29
10K
C16
12pF
C17
0.1u
C24
4.7u
JP5
C6
0.1u
U2
GND
D2
VCC
D1
SN6501
C5
10uF
D1
D2
4.7u
C22
LED4
R1
1K
C7
4.7u
C23
0.1u
C8
0.1u
U3
C10
0.1u
C9
10uF
GND
LED1
R30
1K
R32
1K
R33
1K
U4
VCC1
VCC2
GND1
GND2
RXD(O)
CANH
TXD(I)
CANL
ISO1050
C11
0.1u
C12
4.7n
R21
10
R22
10
R24
60
R25
60
PESD2CAN.215
D4
JP3