Power

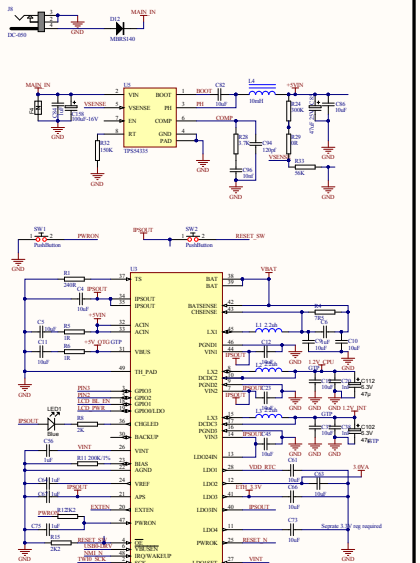

DRAM Power

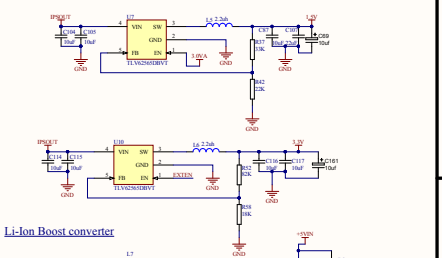

Li-Ion Boost converter

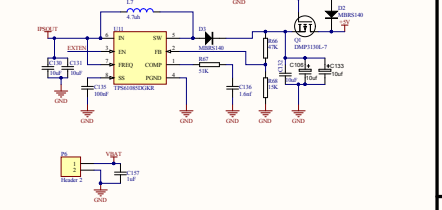

LCD Backlight Driver

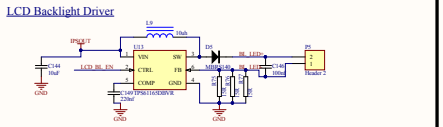

CPU

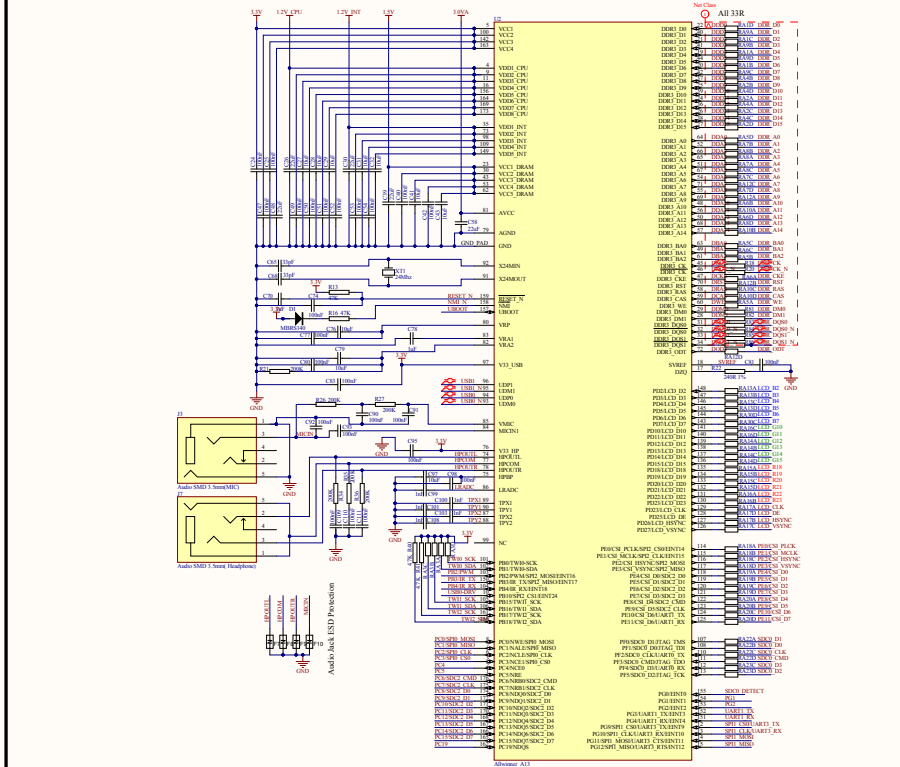

Expension Headers

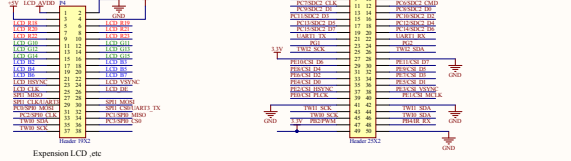

SD Card, Flash, JTAG,Debug UART

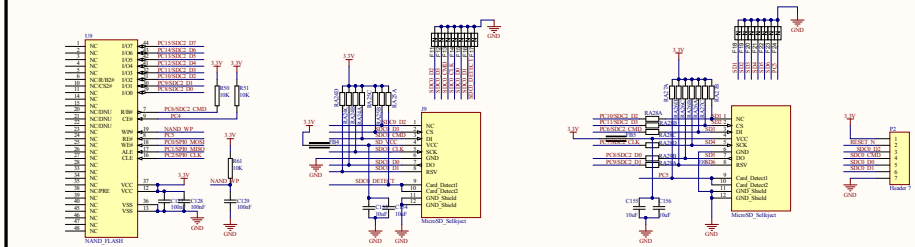

RAM

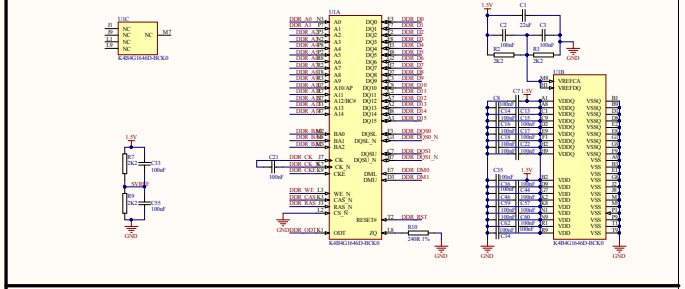

USB

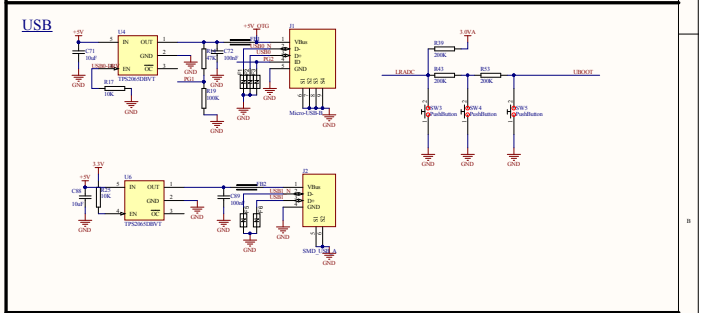

LCD

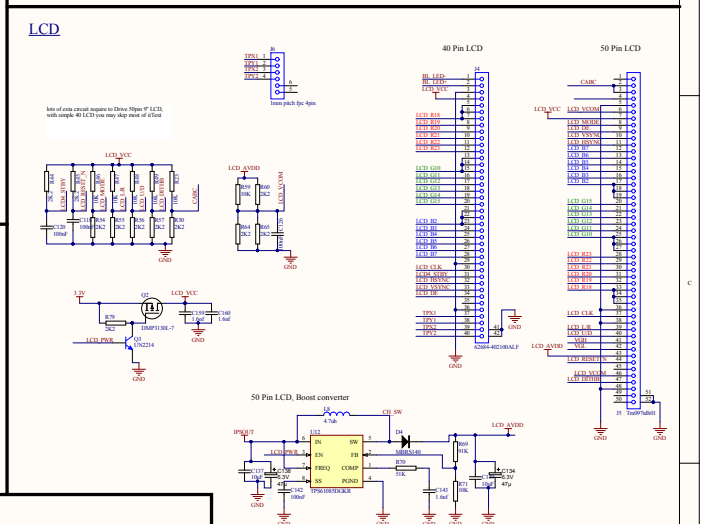

Title: * tryMay			Gaurav Singh
Size: A1	Number: *	Revision: *	www.circuitvalley.com
Date: 12/7/2013	Time: 11:44:15 PM	Sheet* of *	
File: C:\Users\Gaurav\Documents\Allwin Designs\A13\Allwinner_A13_SCH.SchDoc			