Microcontroller unit

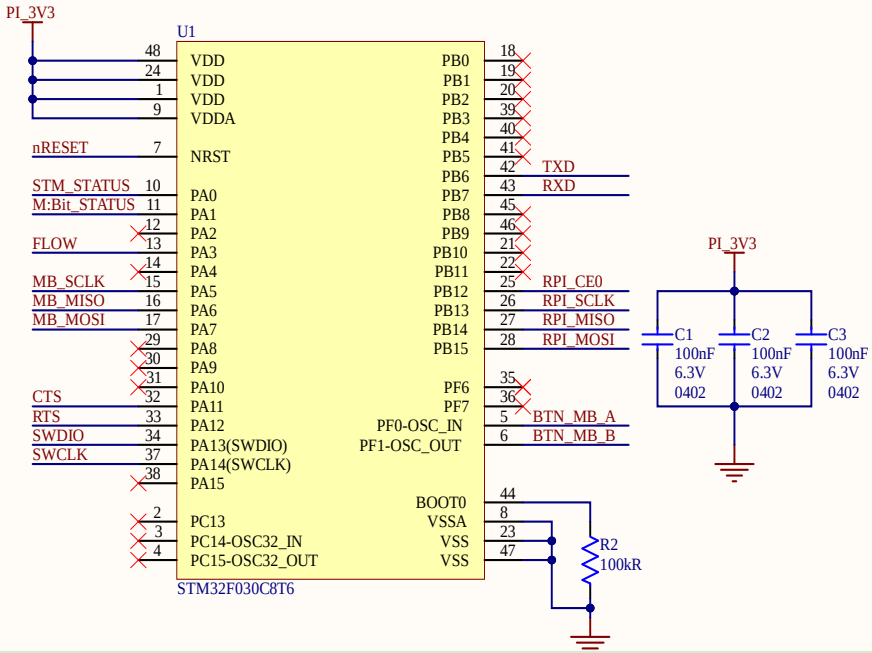

micro:bit connections

190 mA max current draw from micro:bit V2.

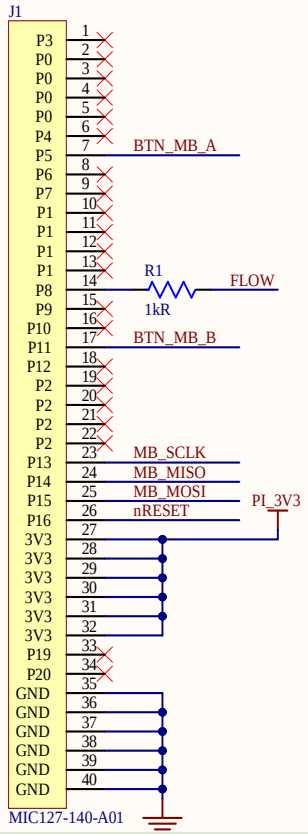

LEDs

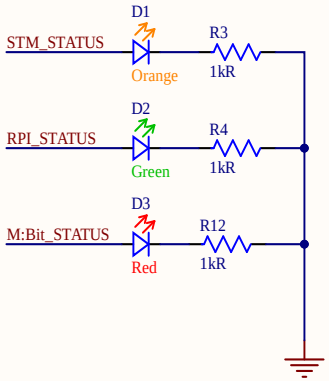

Programming/debug connector

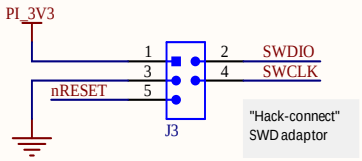

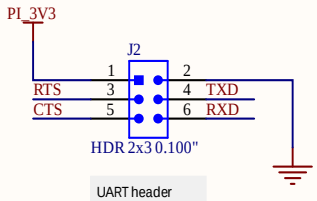

Key:

- TO-DO
- Silkscreen & layout notes
- Block name
- Design notes

PROJECT FILENAME ArcadeRpiSmartShield 33.PrjPCB	PROJECT CODENAME ArcadeRpiSmartShield	Microsoft	PROJECT DESCRIPTION Pi SPI display extension for the Microbit Arcade.
SHEET FILENAME ArcadeRpiSmartShield 33 MCU.SchDoc	LICENCE Attribution 4.0 International (CC BY 4.0)	LAST MODIFIED 3/4/2021	PAGE 1 OF 2
DRAWN BY C.K, D. G, S.H & Michal	SHEET DESCRIPTION MCU and associated circuitry	REVISION 1.0	PCB ID 33-1.0

R Pi header connections

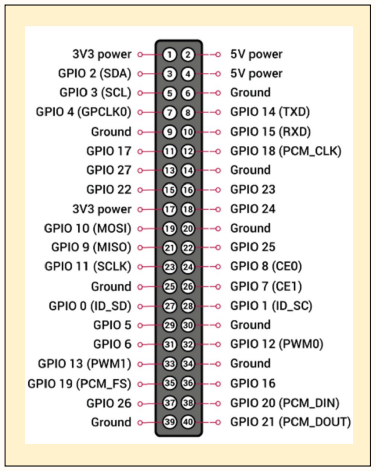

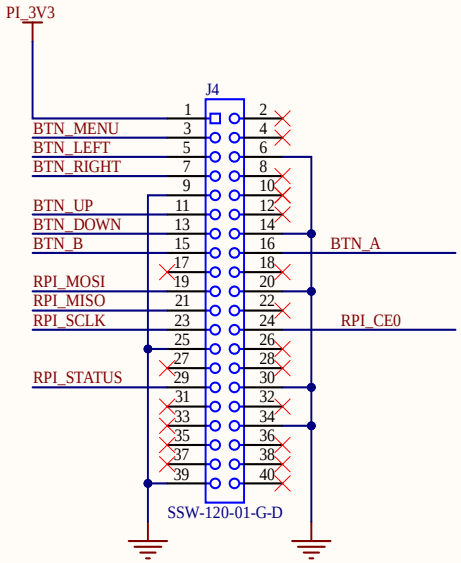

Buttons header

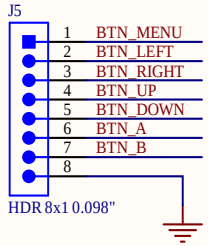

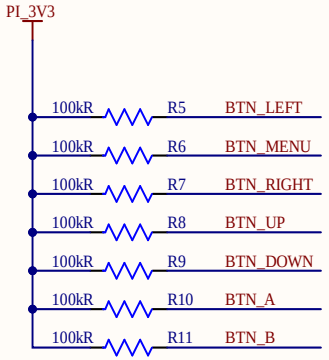

Key:
- TO-DO
- Silkscreen & layout notes
- Block name
- Design notes

PROJECT FILENAME ArcadeRpiSmartShield 33.PrjPCB	PROJECT CODENAME ArcadeRpiSmartShield	Microsoft	PROJECT DESCRIPTION Pi SPI display extension for the Microbit Arcade.
SHEET FILENAME ArcadeRpiSmartShield 33 Pi interface.SchDoc	LICENCE Attribution 4.0 International (CC BY 4.0)	LAST MODIFIED 3/4/2021	PAGE 2 OF 2
DRAWN BY C.K, D. G, S.H & Michal	SHEET DESCRIPTION R Pi interface circuitry	REVISION 1.0	PCB ID 33-1.0

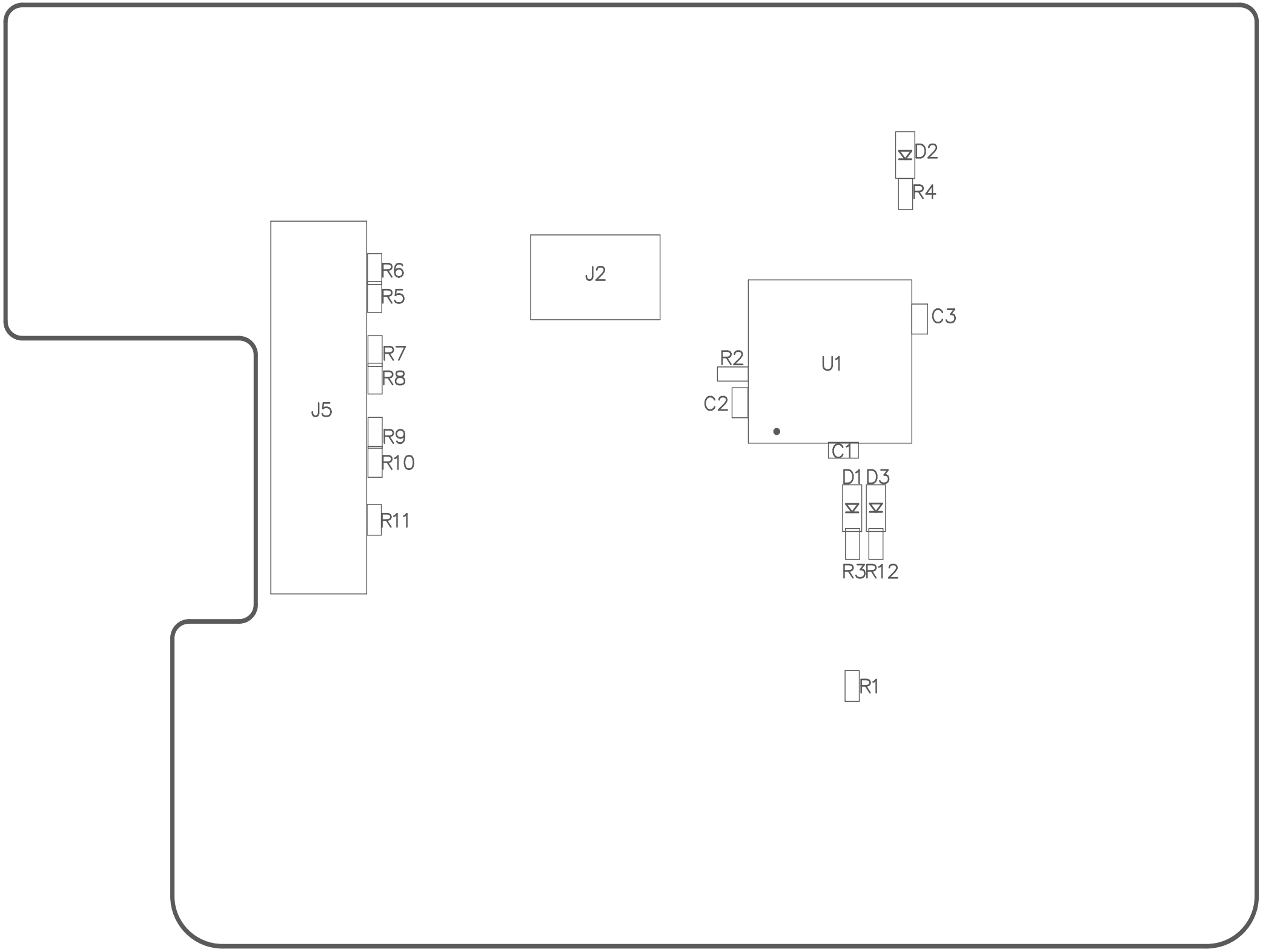
D2
R4
J2
R6
R5
C3
R7
R8
R2
U1
J5
C2
R9
R10
C1
D1
D3
R11
R3
R12
R1

J4
1

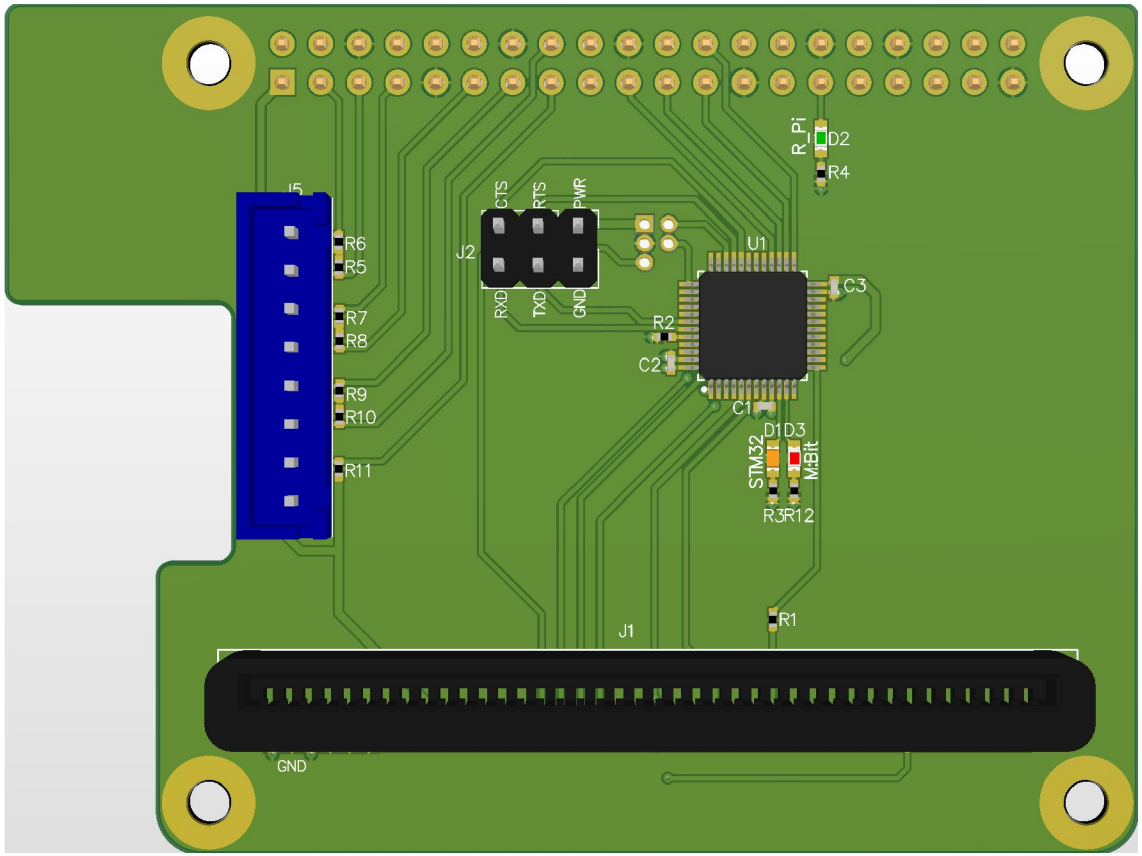
J5
R6
R5
R7
R8
R9
R10
R11
J2
CTS
RTS
PWR
RXD
TXD
GND
U1
C3
R2
C2
C1
R_Pi
D2
R4
STM32
D1
D3
M:Bit
R3
R12
R1
J1
GND

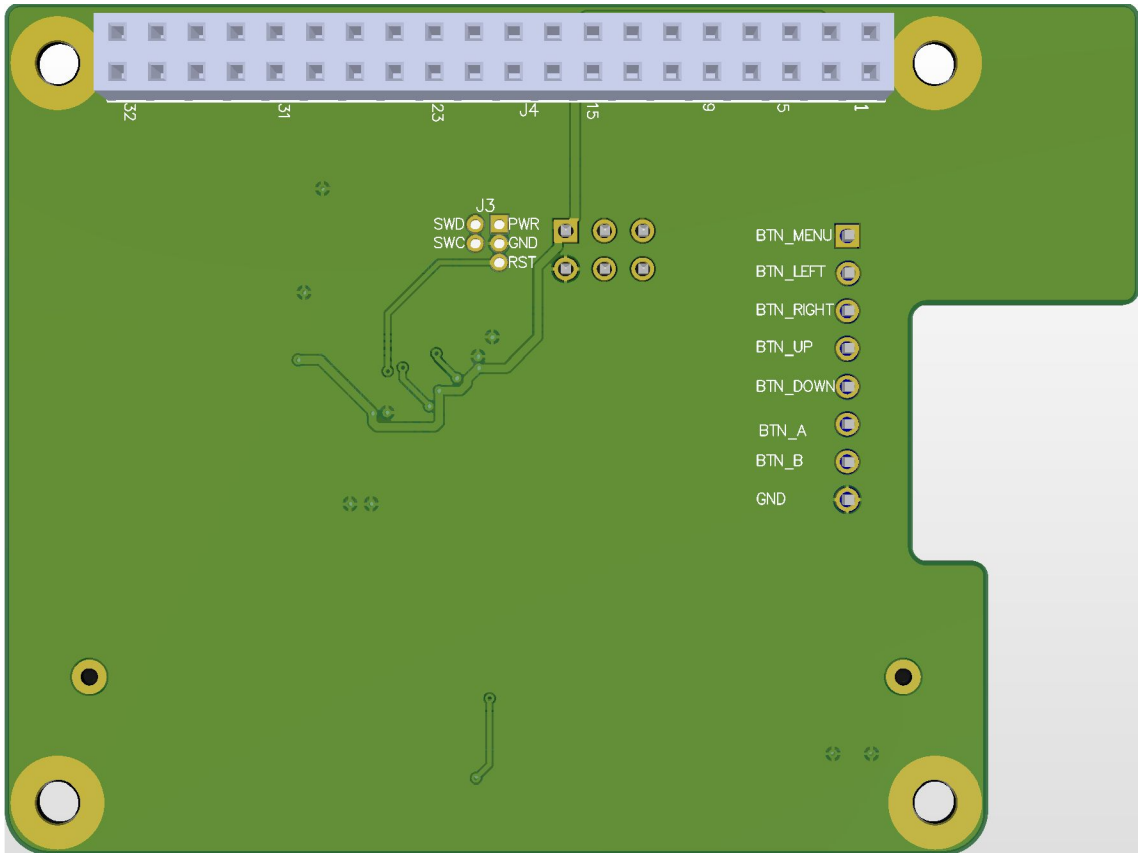
32
31
23
J4
15
9
5
1
J3
SWD
SWC
PWR
GND
RST
BTN_MENU
BTN_LEFT
BTN_RIGHT
BTN_UP
BTN_DOWN
BTN_A
BTN_B
GND

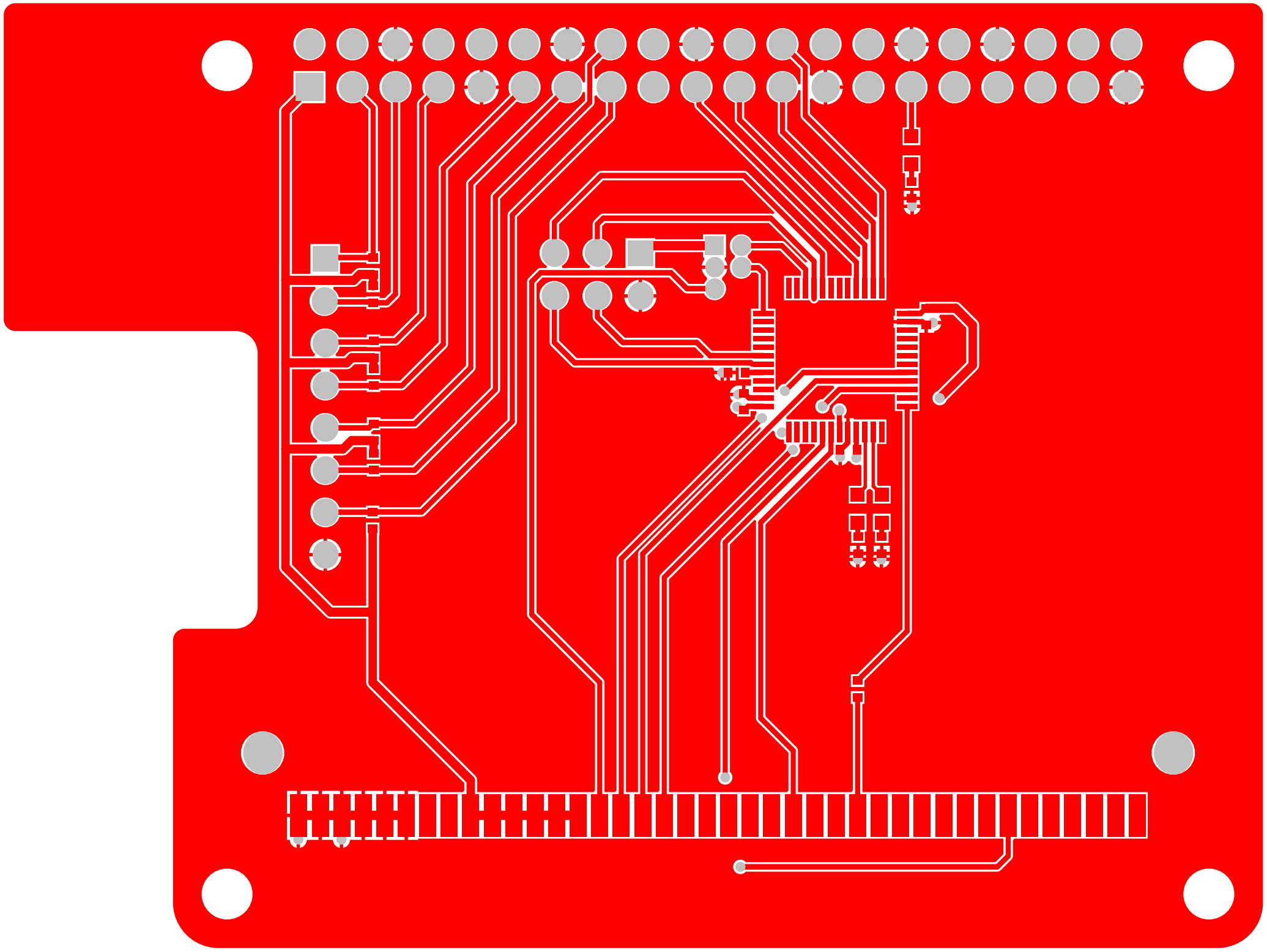

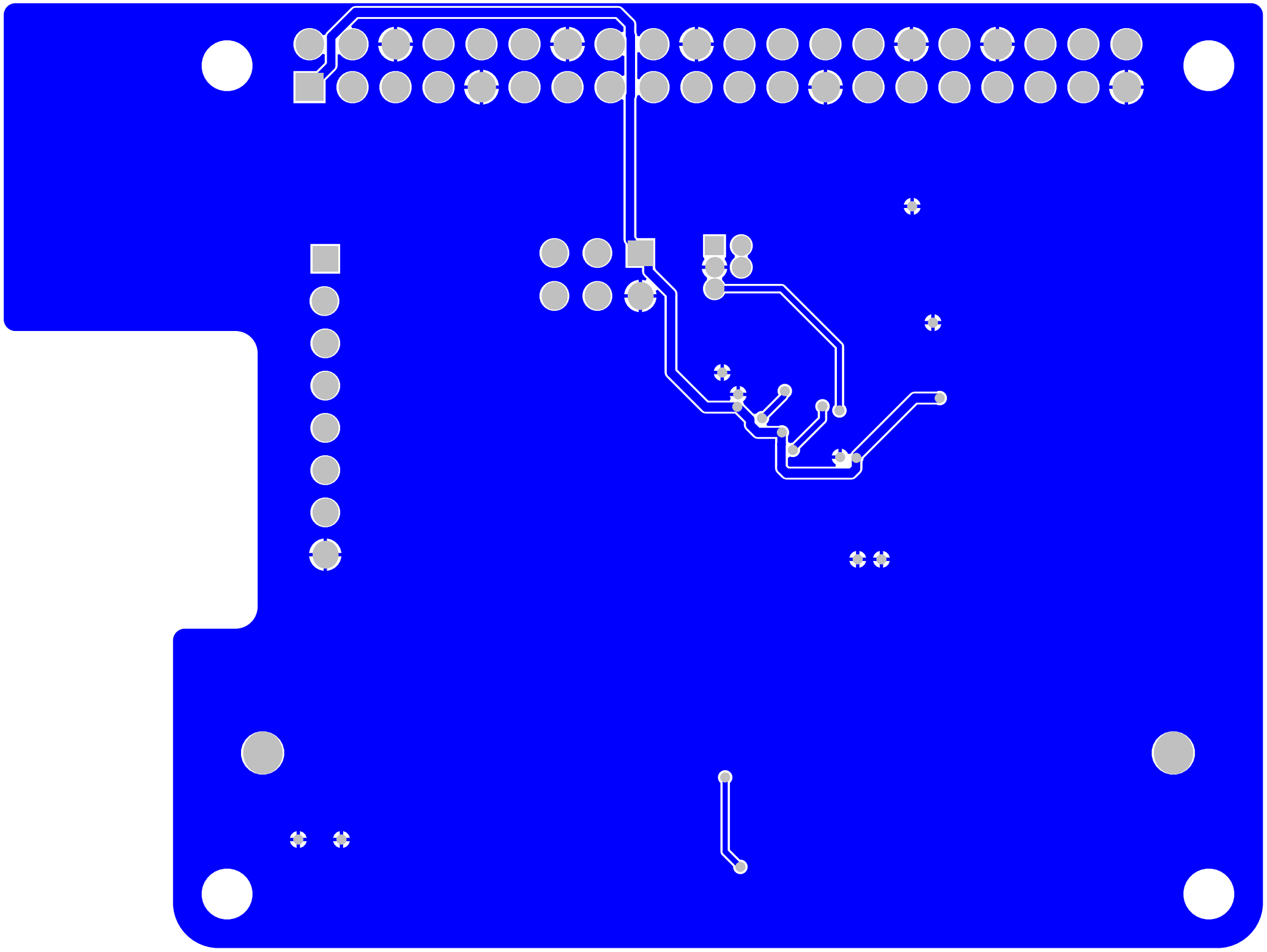

J5
R6
R5
R7
R8
R9
R10
R11
J2
CTS
RTS
PWR
RXD
TXD
GND
U1
R2
C2
C1
C3
R4
R_Pi
D2
D1
D3
STM32
M:Bit
R3
R12
J1
R1
GND

J3

SWD PWR
SWC GND
RST

BTN_MENU

BTN_LEFT

BTN_RIGHT

BTN_UP

BTN_DOWN

BTN_A

BTN_B
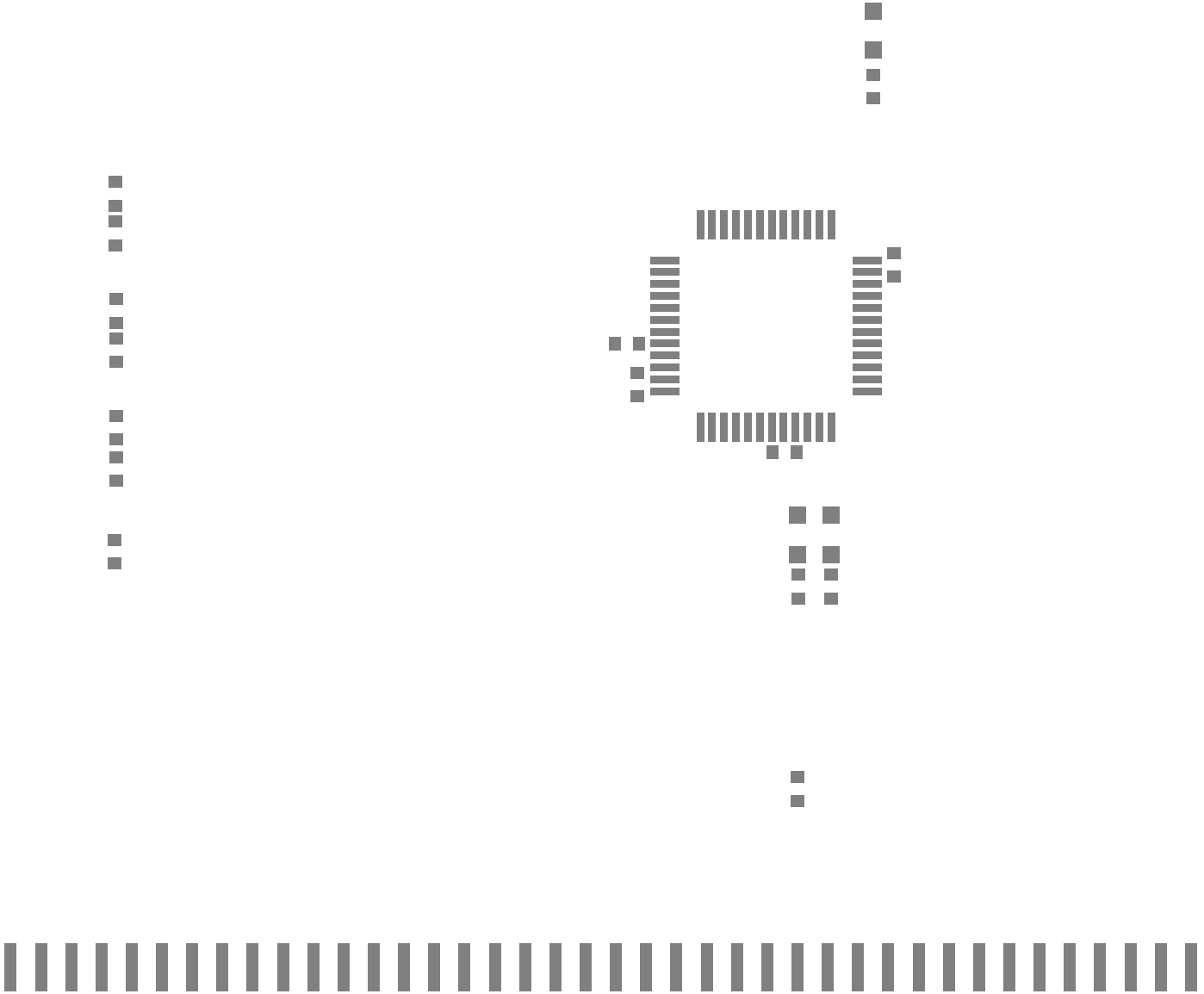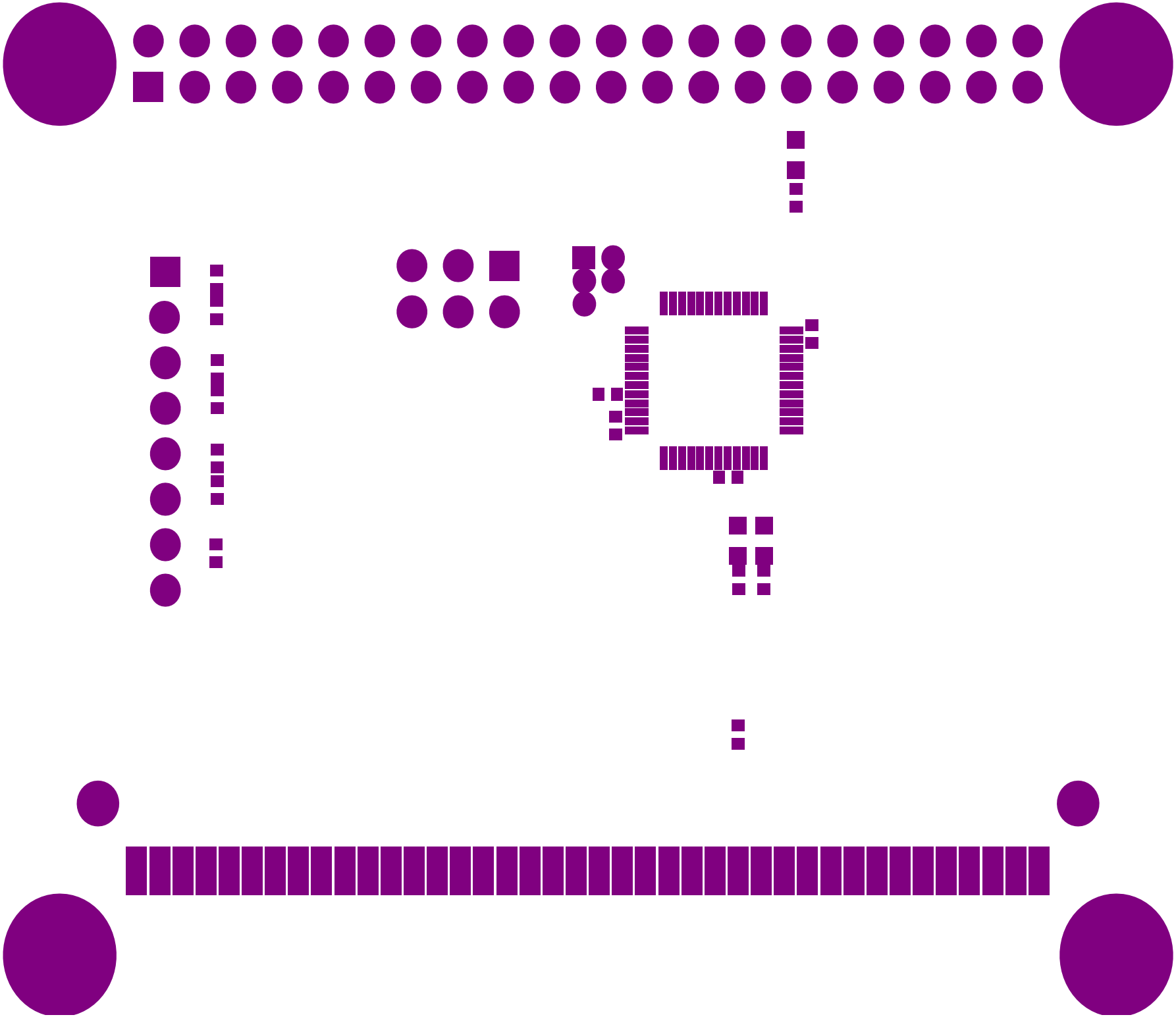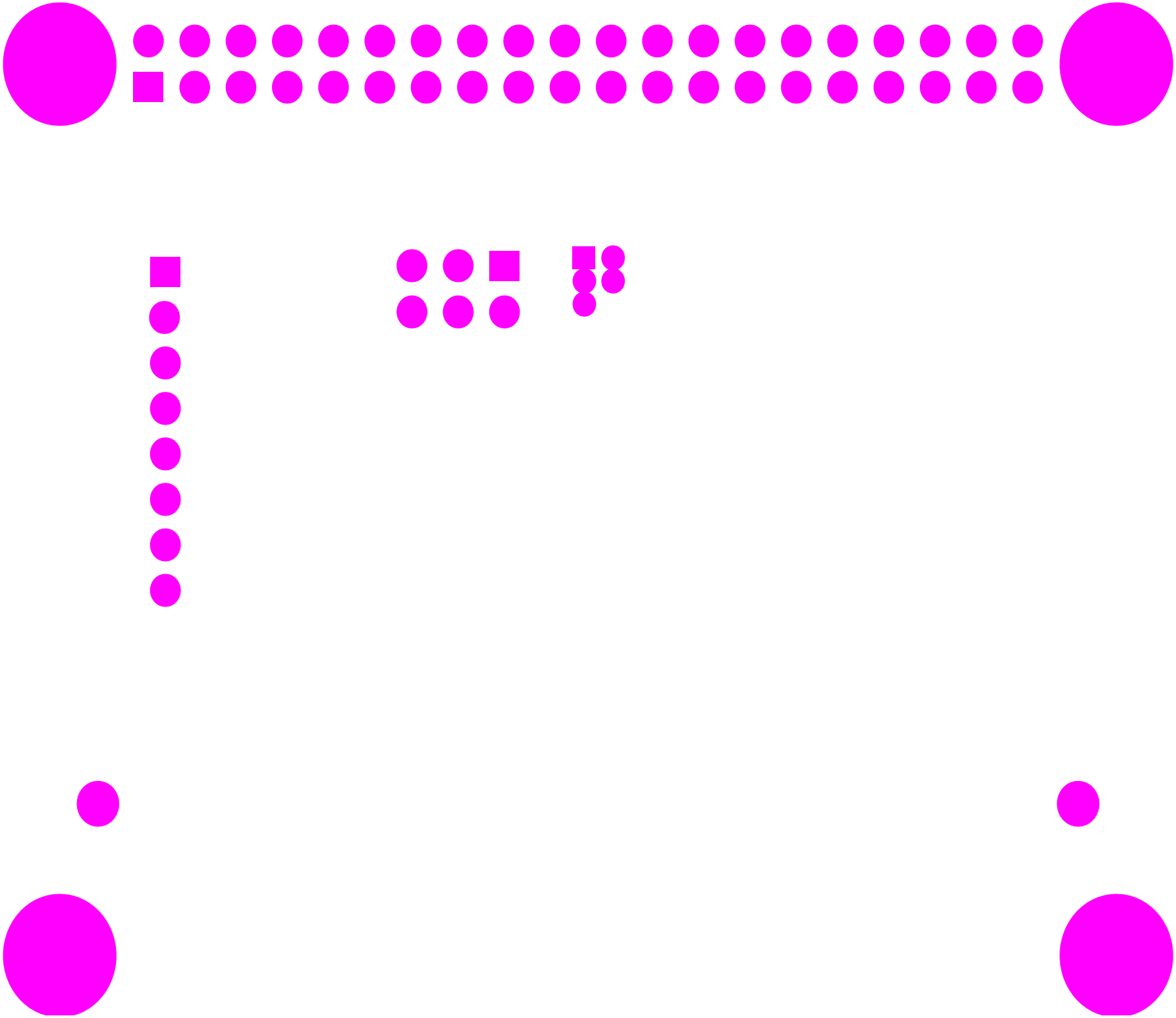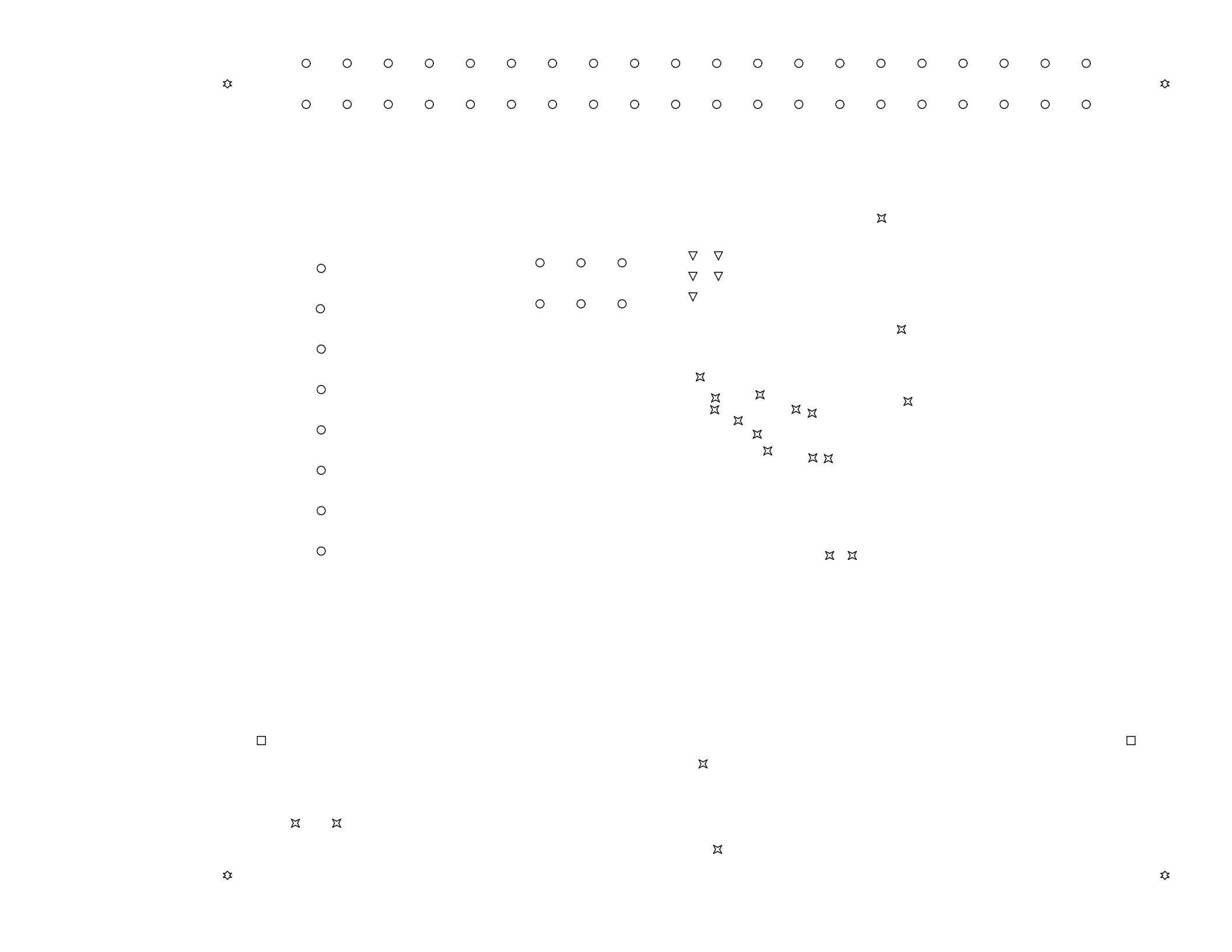
GND