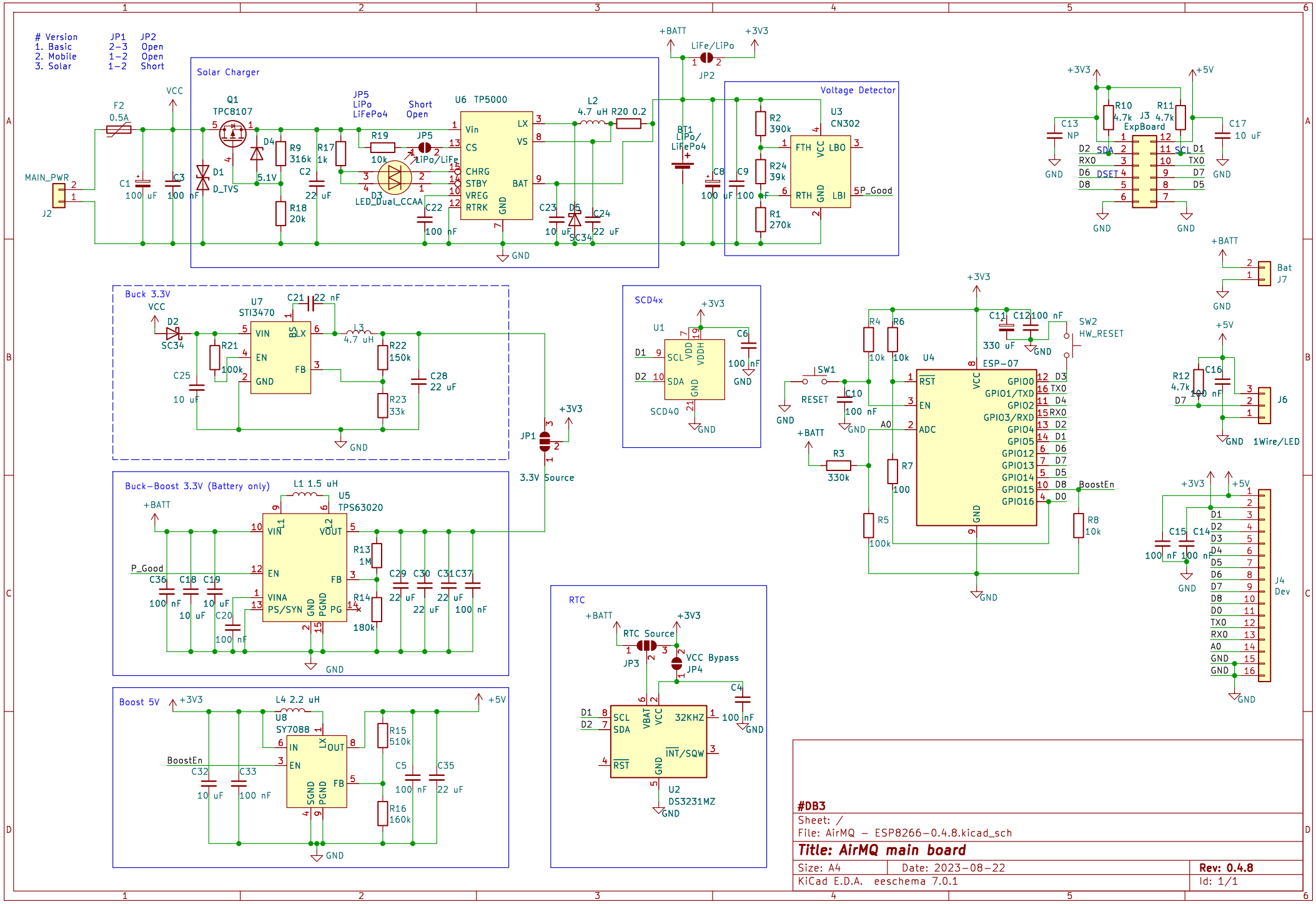
Version JP1 JP2
1. Basic 2-3 Open
2. Mobile 1-2 Open
3. Solar 1-2 Short
Solar Charger
Voltage Detector
Buck 3.3V
SCD4x
Buck-Boost 3.3V (Battery only)
Boost 5V
RTC
U6 TP5000
U3 CN302
U7 STI3470
U1 SCD40
U5 TPS63020
U8 SY7088
U4 ESP-07
U2 DS3231MZ
J3 ExpBoard
J4 Dev
J6 1Wire/LED
J7 Bat
SW1 RESET
SW2 HW_RESET
3.3V Source
RTC Source
VCC Bypass
LiFe/LiPo
LiPo/LiFe
LED_Dual_CCAA
MAIN_PWR
BoostEn
P_Good
#DB3
Sheet: /
File: AirMQ - ESP8266-0.4.8.kicad_sch
Title: AirMQ main board
Size: A4
Date: 2023-08-22
Rev: 0.4.8
KiCad E.D.A. eeschema 7.0.1
Id: 1/1