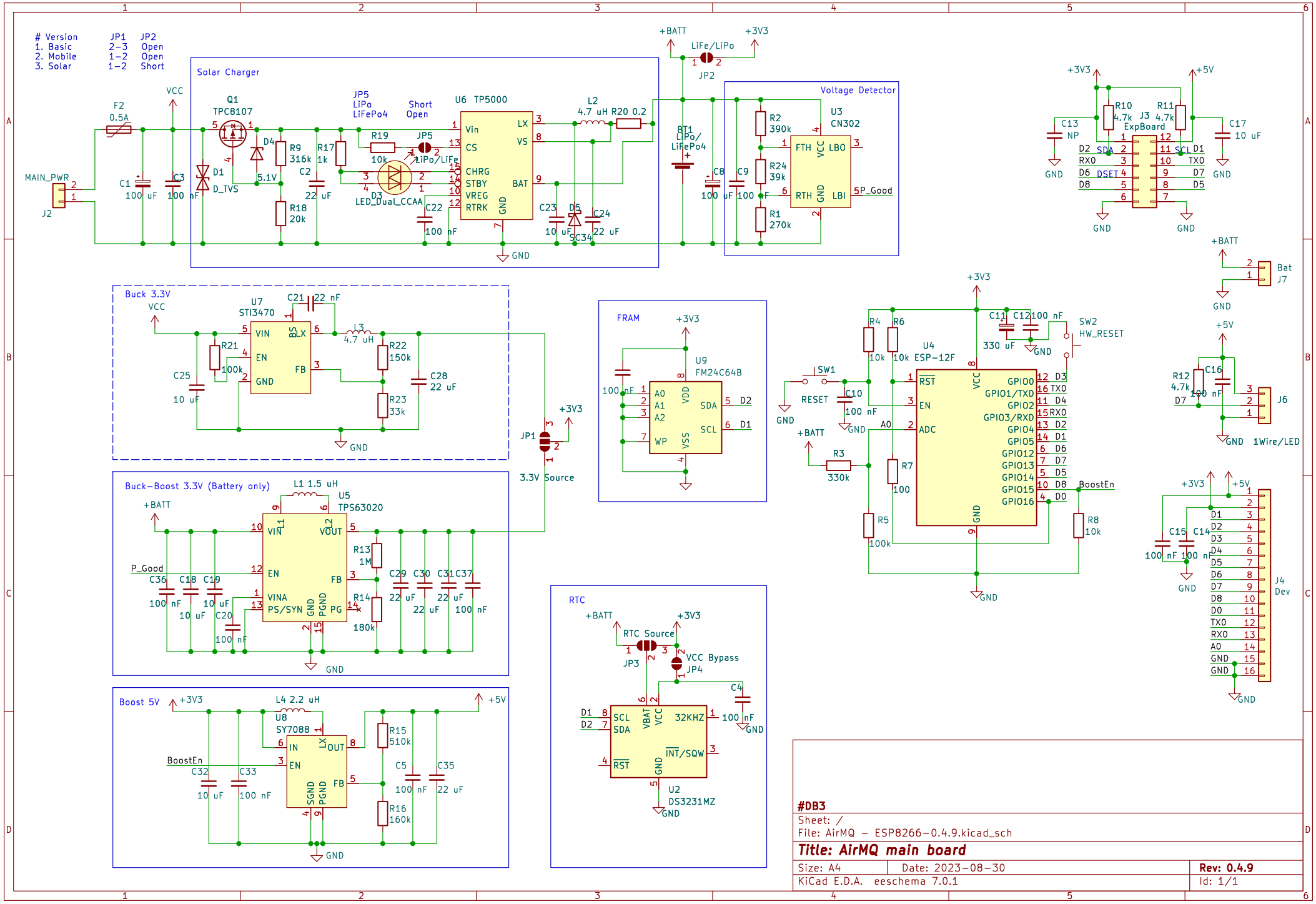
Version JP1 JP2
1. Basic 2-3 Open
2. Mobile 1-2 Open
3. Solar 1-2 Short
Solar Charger
Voltage Detector
Buck 3.3V
Buck-Boost 3.3V (Battery only)
Boost 5V
FRAM
RTC
U6 TP5000
U3 CN302
U7 STI3470
U5 TPS63020
U8 SY7088
U9 FM24C64B
U2 DS3231MZ
U4 ESP-12F
J3 ExpBoard
J4 Dev
J6 1Wire/LED
J7 Bat
J2 MAIN_PWR
Q1 TPC8107
D3 LED_Dual_CCAA
D1 D_TVS
BT1 LiPo/LiFePo4
JP1 3.3V Source
JP2 LiFe/LiPo
JP3 RTC Source
JP4 VCC Bypass
JP5 LiPo/LiFe
SW1 RESET
SW2 HW_RESET
#DB3
Sheet: /
File: AirMQ - ESP8266-0.4.9.kicad_sch
Title: AirMQ main board
Size: A4
Date: 2023-08-30
Rev: 0.4.9
KiCad E.D.A. eeschema 7.0.1
Id: 1/1