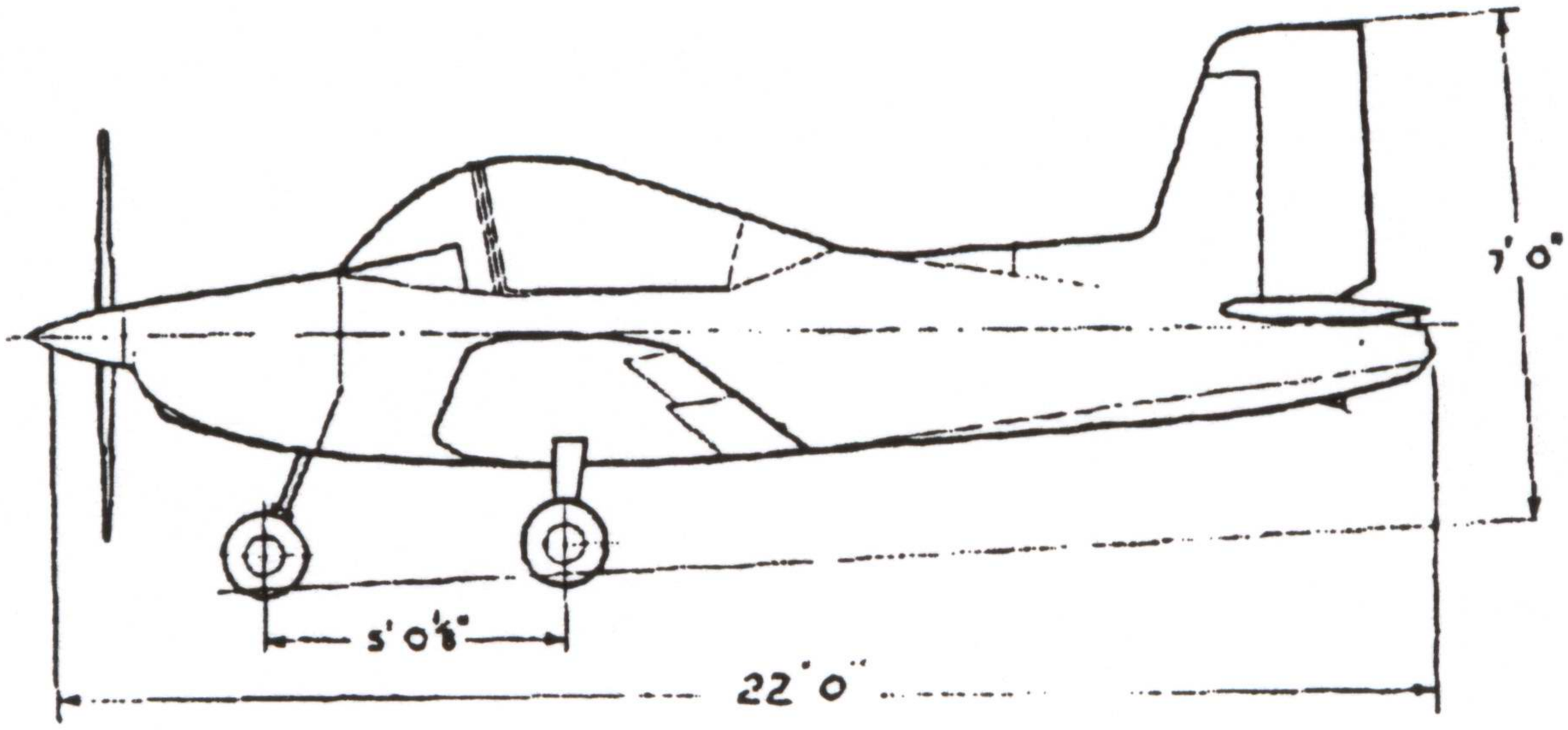
7' 0"
5' 0 1/8"
22' 0"

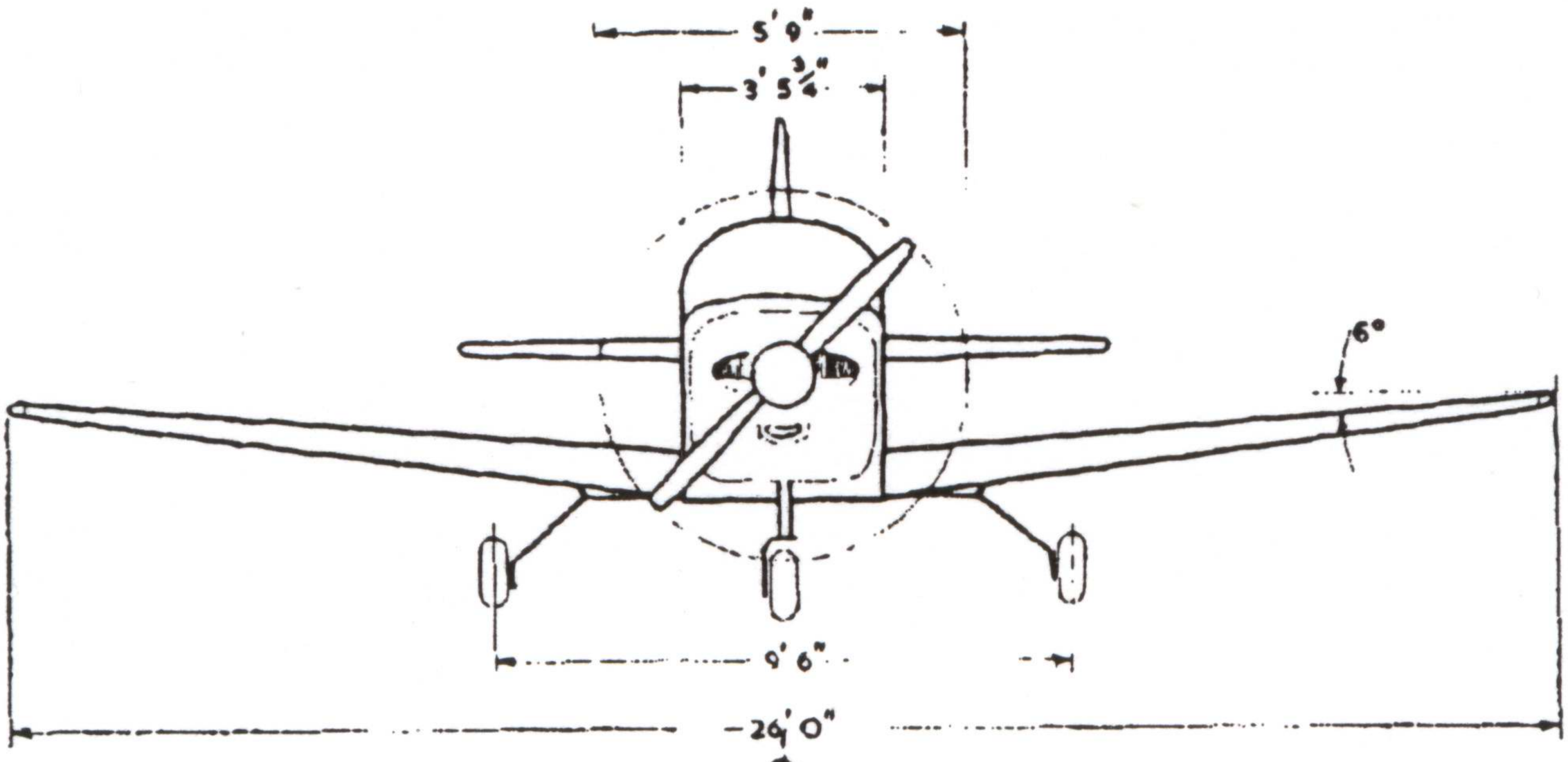
5' 9"
3' 5 3/4"
6°
9' 6"
29' 0"

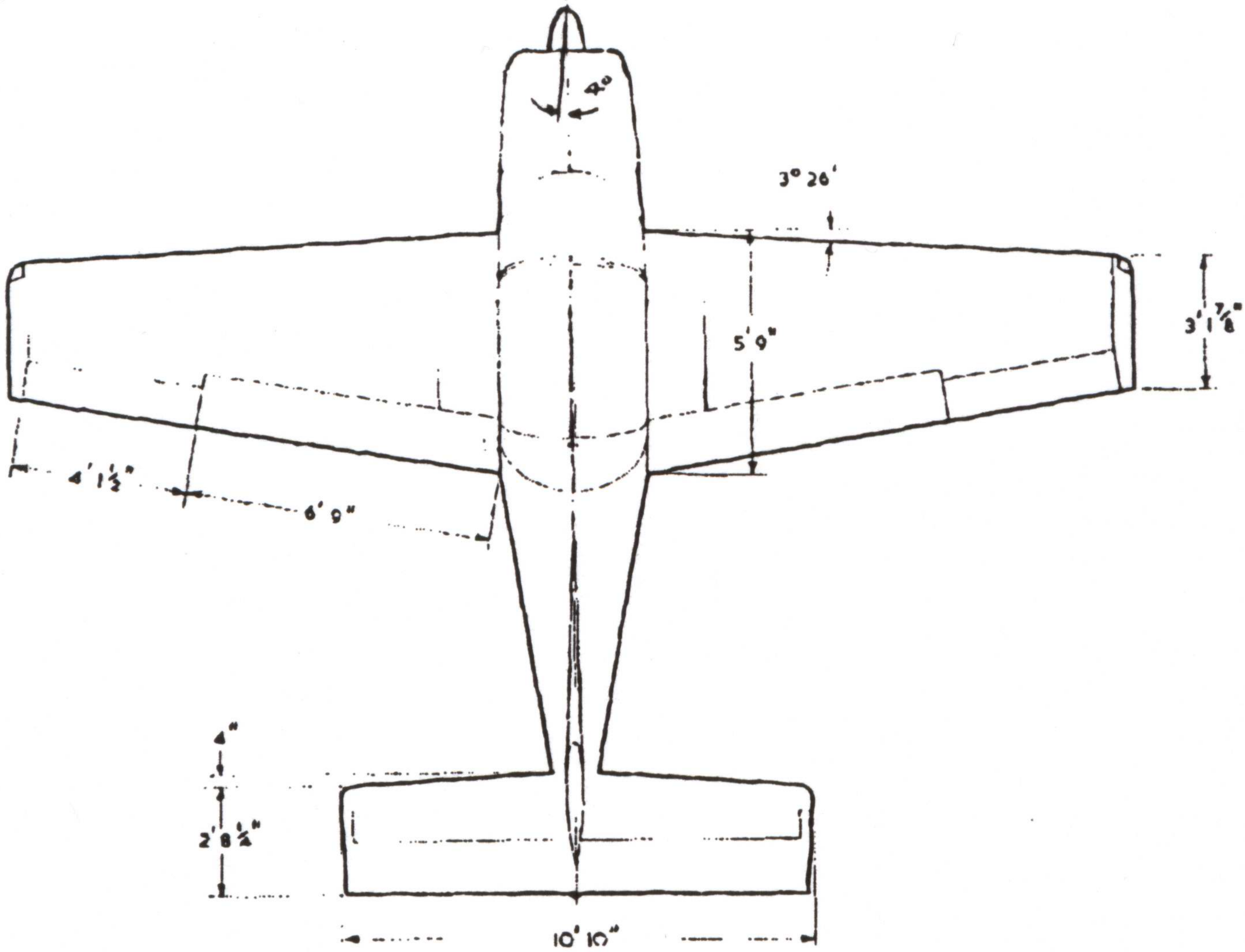
4°
3° 26'
5' 9"
3' 1 7/8"
4' 1 1/2"
6' 9"
4"
2' 8 1/2"
10' 10"