VICTA

DATE: 7/9/62

SERVICE BULLETIN NO. A.1.

ALERT SERVICE BULLETIN

SUBJECT: Dunlop main wheel and brake assembly. Pt.Nos. DM 1050 & 1

PURPOSE: To institute an inspection of drive blocks retaining screws on wheel hub.

REASON: An instance has been found where a retaining screw allowed a drive block to fall between the brake friction disc and the wheel hub wit consequent wheel blocking.

EQUIPMENT AFFECTED: ·Airtourer 100 & Airtourer 115

COMPLIANCE: Immediate and subsequent daily checks until this Alert Bulletin i superseded by a Service Bulletin containing rectification information.

DETAILS: Six drive blocks (Pt.No. DW.1128) are fitted to each main wheel assembly. Each of these blocks is retained by a countersunk socket headed screw (Unbrako type K 3/16 B.S.W. x 1/2" long). The wheel assembly drawing requires these screws to be locked with LOCTITE GRADE C.

If any screws are found to be loose the aircraft concerned is to be grounded until the screws have been removed, cleaned, refitted and locked with Loctite.

The following method of fitting is to be used:-

(i) Clean all traces of old Loctite from the thread and countersunk head of the screw and also from the countersunk hole in the wheel hub.

(ii) Treat the screw and countersunk hole with LOCQUIC cleaner, which effectively cleans and speeds the hardening of the LOCTITE.

(iii) Apply LOCTITE C (4-1) to the thread and head of the screw.

(iv) Insert screw in countersunk hole and tighten with Allen key.

PARTS REQUIRED: Nil

PARTS REMOVED: Nil

SPECIAL TOOLS REQUIRED: 1. Allen key - wrench type
Loctite C (4-1)
Locquic cleaner

EFFECT ON WEIGHT: Nil

PUBLICATIONS AFFECTED: Nil

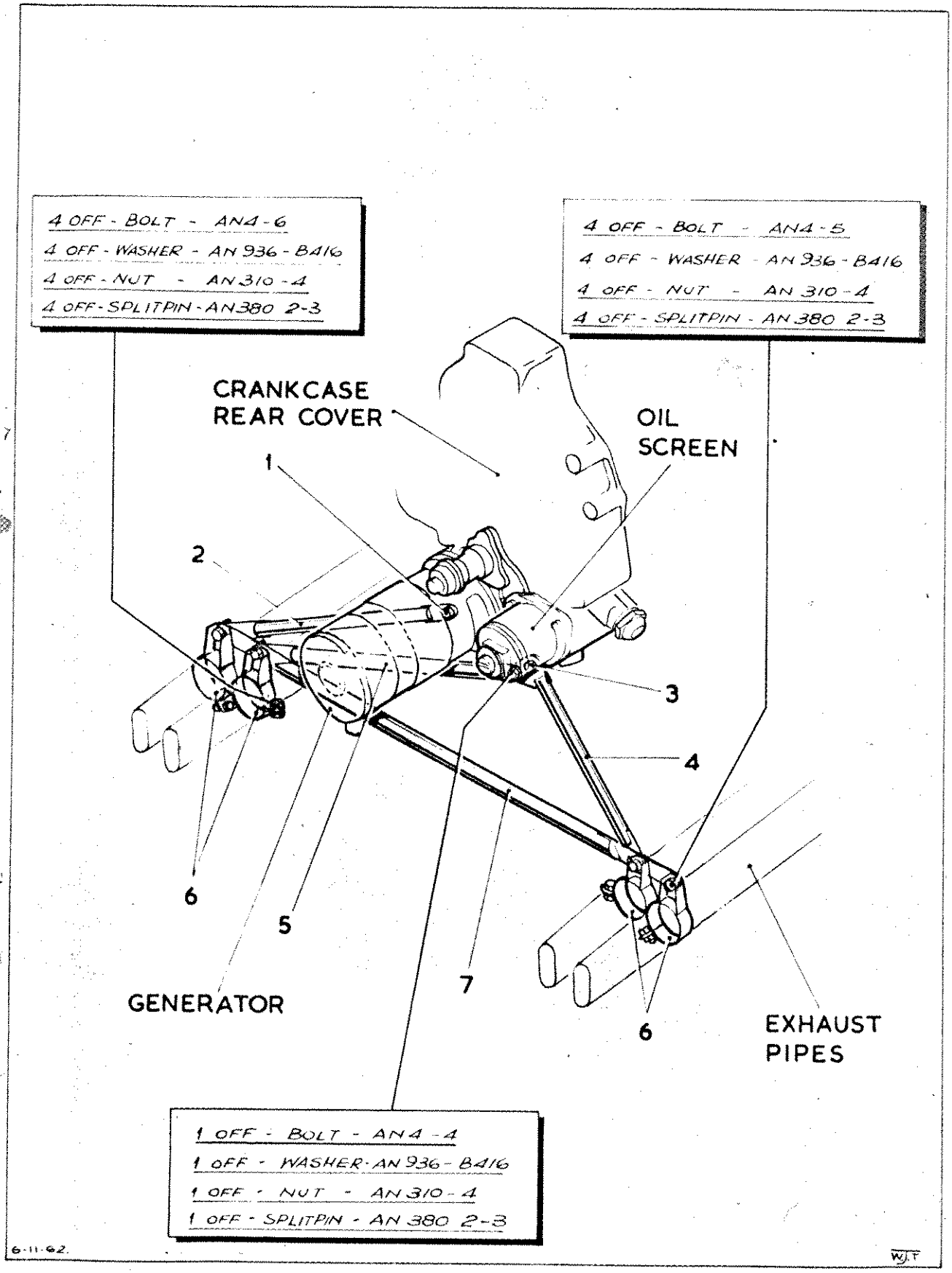

FIG. 1 EXHAUST STAY ATTACHMENT.

(k) Fully tighten exhaust flange nuts.

(l) Fully tighten all nuts and bolts of stay structure.

(m) Replace cowl and propeller. LOCKWIRE propeller bolts.

PARTS REQUIRED.

MOD. KIT NO. B2/1 consisting of the following parts:-

Part No.	Description	No. Off
04036/21	Exhaust pipe stay - bottom	1
04036/22	" " " - R/H	1
04036/23	" " " - inner	1
04036/24	" " " - L/H.	1
04036/25	" " clamp - inner L/H.	1
04036/26	" " " - " R/H.	1
04036/27	" " " - outer L/H.	1
04036/28	" " " - outer R/H.	1
AN4-4	Bolt hex. h'd. 17/32" long	1
AN4-5	" " " 21/32" long	4
AN4-6	" " " 25/32" long	4
AN936-B416	Washer, shakeproof - 1/4" I.D.	9
AN936-B516	" " - 5/16" I.D.	8
AN310-4	Nut, castellated - 1/4" - 28	9
AN380-2-3	Split pin	9

PARTS REMOVED

Two washers

SPECIAL TOOLS REQUIRED

Nil

EFFECT ON WEIGHT & C.G. Approx. 2 lb. at station 40" from datum.

PUBLICATIONS EFFECTED

Nil.

VICTA

DATE: 6/11/196

SERVICE BULLETIN NO. 2

SUBJECT Exhaust pipe stay assembly - Mod. No.B.2.

PURPOSE To prevent exhaust pipe flanges cracking

REASON Instances have occurred when the exhaust pipe flanges have failed due to the vibration of the unsupported exhaust pipes.

EQUIPMENT EFFECTED Airtourer 100 - prior to and including aircraft Serial No.7 not incorporating Mod. No. B.1.

COMPLIANCE Immediately - except aircraft Serial Nos.2, 4 & 5 - next 100 hourly inspection.

DETAILS Rectification of the exhaust flange cracking consists of installing a triangulated tubular structure picking up on two points at the rear of the engine and supporting the rear ends of the exhaust pipes. Refer to attached Fig. 1 in conjunction with details listed below when installing the stay structure.

(a) Remove propeller and cowls (refer to chapters 31 and 41 respectively of the maintenance manual).

(b) Remove exhaust pipes (refer chapter 46 of the maintenance manual).

(c) Inspect flanges of exhaust pipes for cracks. If flanges show signs of cracking replace exhaust pipe assembly. If exhaust pipe shows signs of cracking repair by welding is permitted.

(d) Install exhaust pipes using Shakeproof washers Part No.AN936-B516 under each flange nut. DO NOT TIGHTEN FULLY AT THIS STAGE, but only sufficient to allow ends of exhaust pipes to be aligned with augmentors.

(e) (Refer to Fig.1) Remove bottom left hand nut and washer (1) from generator attachment flange. Discard washer and fit L/H. outer stay (2).

(f) Remove bottom nut and washer (3) from oil screen attachment flange. Discard washer and fit R/H. outer stay (4).

(g) Attach inner stay (5) to lug on R/H. outer stay

(h) Fit exhaust pipe clamps (6) to rear of exhaust pipes.

(j) Attach bottom stay (7) to exhaust pipe clamps and inner and outer stays. DO NOT TIGHTEN BOLTS AT THIS STAGE

NOTE When positioning clamps on exhaust pipes ensure that no tension resulting in deflection of the pipes is incurred.

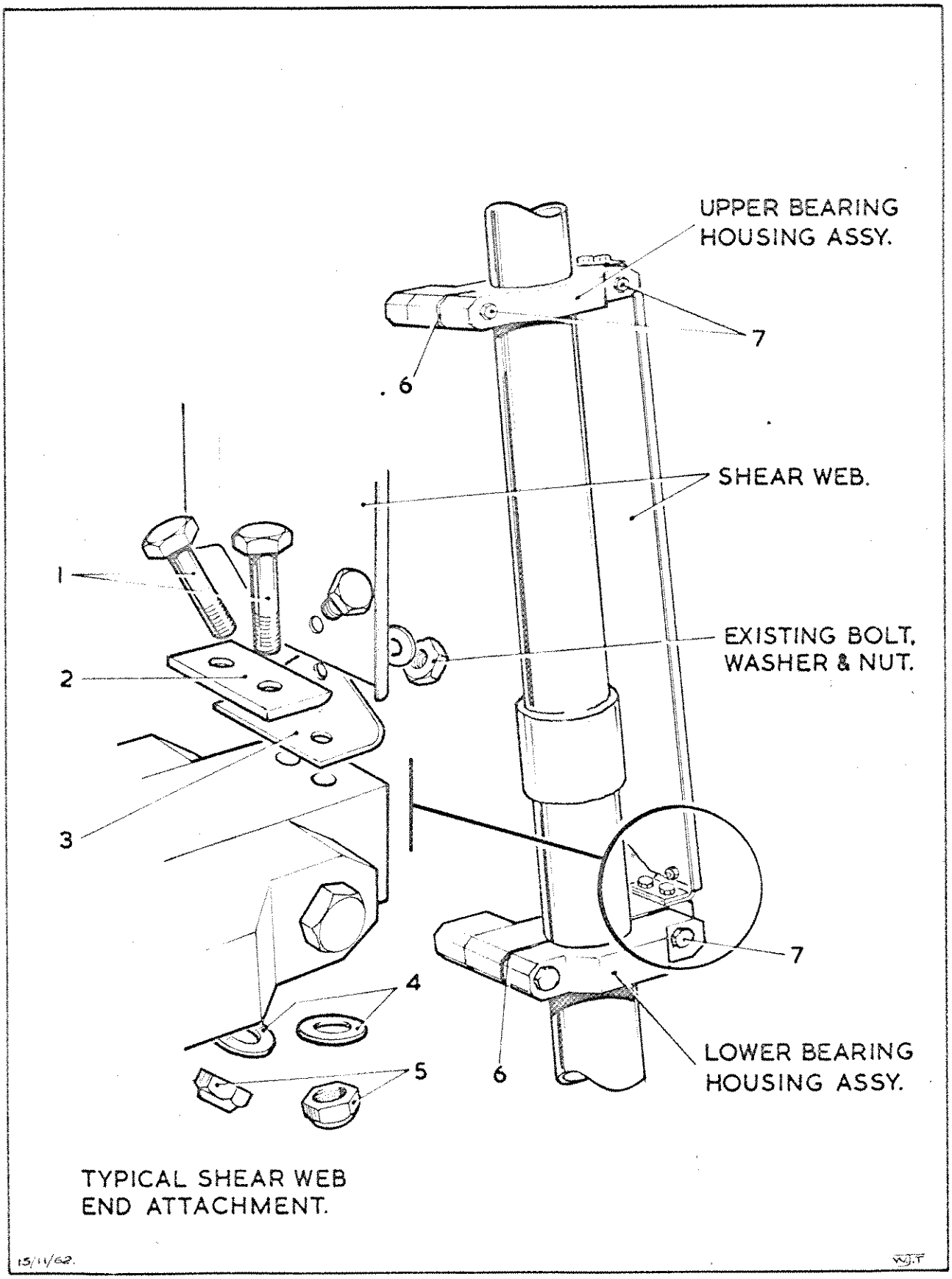

FIG. 1. NOSE-LEG SHEAR WEB ATTACHMENT

PARTS REQUIRED Mod Kit No.B3/1 consisting of the following parts:-

Part No.	Description	No.Off
60005/2	Attachment Angle	2
60008/1	Aluminium packer	2
AN3-11A	Bolt 1 5/32" long	4
AN960-10L	Washer 1/32" thick	4
AN365-1032	Nut. Self locking	4

PARTS REMOVED 2 Aluminium alloy angles
4 bolts.
4 washers.
4 nuts.

SPECIAL TOOLS REQUIRED Nil.

EFFECT ON WEIGHT & C.G. Nil.

PUBLICATIONS EFFECTED. Nil.

VICTA

DATE: 6/11/19(

SERVICE BULLETIN NO. 3

SUBJECT Nose leg shear web top and bottom attachment angles - Mod. No.B.3

PURPOSE To prevent cracking of attachment angles.

REASON Failure of the top and bottom attachment angles has occured due to flexing of the upper and lower nose leg bearing housings.

EQUIPMENT EFFECTED Airtourer 100.

COMPLIANCE. Immediately.

DETAILS Rectification of the failure of the attachment angles is achieved by fitting heavier gauge steel angles in place of aluminium alloy angles and 10 SWG aluminium alloy packers under the attachment bolts.
Refer to Fig. 1 attached in conjunction with details listed below

(a) Check that upper and lower bearing housing attachment bolts (7) have not worked loose.

(b) Check that the packer (6) is in position between the faces of the bearing housing segments and that tightening of the attachment bolts (7) does not tighten bearing onto nose leg.

(c) Remove nuts, bolts and washers securing angles to upper and lower bearing housings and discard.

(d) Remove angles from shear web and discard, but retain attaching bolts, washers and nuts.

(e) Replace old aluminum angles with steel angles (3) and aluminium packer (2) which is inserted beneath the heads of new bolts (1) which secure the angles to the bearing housing in conjunction with washers (4) and nuts (5).

(f) Before securing shear web to angles in it may be necessary to trim the end of the web to clear the aluminium packer.

(h) Lift complete rudder pedals assembly and brake torque tube upwards and rearwards at approximately 45° in order to withdraw rudder operating lever from keel member and to give sufficient clearance between ends of rudder pedals assembly and sides of fuselage to remove the two bearing blocks.

(i) Remove bearing blocks from ends of rudder pedals assembly and refer to Fig. 1 attached.

(j) Drill out ⅛" dia. rivets attaching tapered plate (1) to base plate (2).

(k) Remove rear bush and replace with new long bush (3).

(l) Open up the four existing rivet holes with a No. 21 drill and countersink the outer face of the base plate to .286" dia. at 100° to suit 5/32" dia. countersunk rivets.

(m) Rivet tapered plate complete with bushes to the base plate with 5/32" dia. rivets (4) and assemble bearing blocks to ends of rudder pedals assembly.

(n) To reassemble rudder pedals assembly reverse dismantling procedure.

NOTE: Care should be taken to replace the packing between the bearing blocks and the fuselage so that the rudder operating lever is positioned centrally in the slot in the top of the centre keel member.

Use new self locking nuts when attaching rudder pedals assembly to fuselage.

PARTS REQUIRED

Mod. Kit No. B4/1 consisting of the following parts:

Part No.	Description	No. off
52425	Bush - long	2
AN 426AD 5-12	Rivet, c'sunk head 5/32" dia.	8
AN 365 - 428	Nut, self locking	8