DETAILS: (continued)

CAUTION

Advance toward final dimension slowly. Winding it another half turn inwards is not difficult, but it is not possible to turn the heli-coil backwards if it is inserted too deeply.

(v) Break off tang of insert by tapping with a rod having a diameter that fits into the insert.

(vi) Repeat installation on other side.

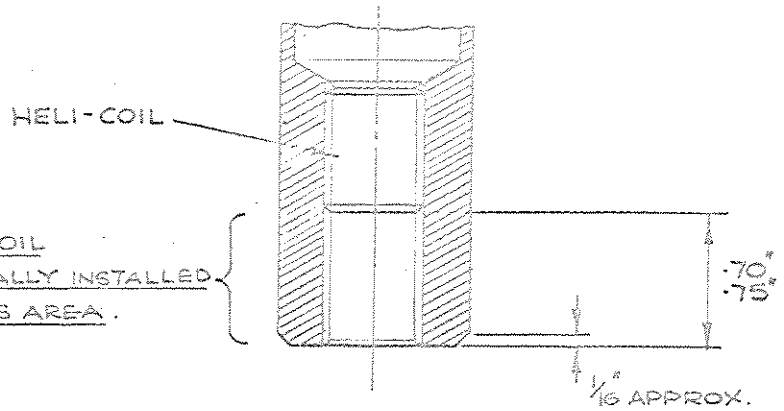


(vii) Re-instal main landing gear in accordance with Maintenance Manual, chapter 16, Part 3. Use conical cup, Part No. 02-61034/1, conical washer Part No. 07-61035/1, and bolt Part No. 07-61033/1 as shown.

NOTE

(i) Ensure washer 02-61035/1 is installed with conical face against leg.

(ii) Delete undercarriage fairing inner attachment bracket Part No. 10043/1 if fitted.

(viii) After 50 hours flying time, drop undercarriage fairings, lift weight off main wheels and re-torque inner attachment bolts to 38-42 ft.lbs. (456-504 in.lbs) with dry thread. Lockwire and replace fairings.

(ix) No further inspection is required until bolt replacement at 500 hours.

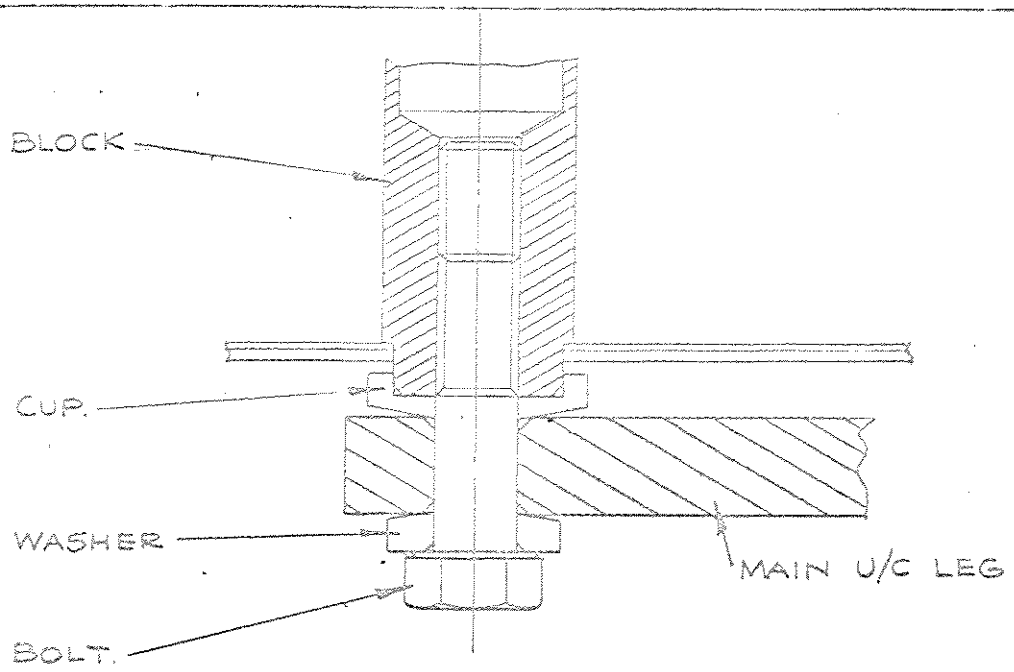


PARTS REQUIRED: Mod Kit 62/1 consisting of:-

| Part No. | Description | No. Off |
|---|---|---|
| 02-61033/1 | Bolt M.L.G. | 2 |
| 02-61034/1 | Conical Cup | 2 |
| 02-61035/1 | Conical Washer | 2 |
| 1191-7CN x 2D | 7/16 UNF. Helicoil Insert | 2 |

PARTS REMOVED:

| Part No. | Description | No. Off |
|---|---|---|
| 02-61032/1 | Bolt | 2 |
| 02-61C26/2 | Washer | 2 |
| 1191-7CN x 2D | 7/16 UNF. Helicoil Insert | 2 |

DRAWINGS REQUIRED: Nil

SPECIAL TOOLS REQUIRED: Heli-coil inserting tool Part No. 535-7

EFFECT ON WEIGHT & C.G.: Negligible.

PUBLICATIONS AFFECTED: Make ink amendment to Airtourer Spare Parts Catalogue, page 72.

ITEM 10. Delete 61C26/1, add 02-61035/1

11. Delete AN7H11A, add 02-61033/1

Add new item
02-61035/1 Conical Washer 1

VICTA

# SERVICE BULLETIN

AVIATION DIVISION [illegible]

Date: 11th August, 1966.

No. 63
Issue 1
D.C.A. APPROVED

SUBJECT: Aerobatic oil trap, crankcase breather.

PURPOSE: To remove trap.

REASON: Several cases have been reported in service where unexplained oil loss has occurred in normal flight operation. Removal of the oil trap and the substitution of a straight out crankcase breather has in each case reduced the oil consumption to normal.

This trap has, in the majority of cases, given no trouble, and has contributed significantly toward minimising oil loss during aerobatics. If the trap is removed, care must be taken to monitor oil pressure during extended aerobatics and to check oil level before flight after an aerobatic period.

EQUIPMENT AFFECTED: All Airtourer 115 aircraft fitted with Mod. B199.

COMPLIANCE: At owners discretion, or upon evidence of any unexplained oil loss and indication of excess oil passing through crankcase vent lines.

DETAILS:

1. Remove hose lines from lower outlet from trap, return outlet from vacuum pump oil separator, and from crankcase oil return.
2. Using section of hose removed from trap, re-connect separator drain to crankcase return. Omit tee piece.
3. Remove trap and plastic hose from crankcase breather.
4. Re-run crankcase breather, using new hose. Follow original route and clipping, but by-pass area where trap was mounted.

PARTS REQUIRED: Mod Kit 63/1, consisting of

| Part No. | Description | No. Off |
|---|---|---|
| HOS 1-10- | Nylex Hose 5/8 ID x 30" | 1 |

PARTS REMOVED:

| Part No. | Description | No. Off |
|---|---|---|
| 02-43262/1 | Oil Trap | 1 |
| 02-51309/1 | Tee Piece | 1 |

DRAWINGS REQUIRED: Nil

SPECIAL TOOLS REQUIRED: Nil

EFFECT ON WEIGHT & C.G.: Negligible

PUBLICATIONS AFFECTED: Nil

VICTA

# SERVICE BULLETIN

AGRICULTURAL DIVISION  MURRAY ROAD, PARRAMATTA, N.S.W. AUSTRALIA  [illegible]

10th January, 1967  No. 65
Issue 1

SUBJECT: SAFETY HARNESS UPPER ATTACHMENT

PURPOSE: To replace the sideplates at the safety harness upper attachment points, left and right hand seats

REASON: Although existing sideplates meet requirements for a load applied fore and aft, an angled pull will effect the load sharing between the links and may adversely effect the strength of the connection. The new sideplates are of thicker material and will provide an adequate margin for angle restraint.

EQUIPMENT EFFECTED: All Airtourer 100 and 115 aircraft.

COMPLIANCE: Within 50 hours flying time.

DETAILS:

(a) Remove and discard existing sideplates Part No. 72004/1. Refer Spare Parts Catalogue, Page 143 Item 1.

(b) Replace, using new sideplates Part No. 72004/2. Use existing bolts and spacer.

(c) Repeat for other seat attachment.

PARTS REQUIRED

| PART NO. | DESCRIPTION | NO. OFF |
|---|---|---|
| 72004/2 | Sideplate | 4 |

PARTS REMOVED

| PART NO. | DESCRIPTION | NO. OFF |
|---|---|---|
| 72004/1 | Sideplate | 4 |

SPECIAL TOOLS REQUIRED. Nil

AFFECT ON WEIGHT AND C.G. Nil

PUBLICATIONS EFFECTED

Ink change Spare Parts Catalogue, Page 144 Index No. 1
Delete Part No. 72004/1
Add Part No. 72004/2

D.C.A. APPROVED

VICTA

# SERVICE LETTER

AVIATION DIVISION HANSLEY ROAD, MASCOT, N.S.W. AUSTRALIA. [illegible]

Vol. 66 No. 2
D.C.A. APPROVED

February, 1966.

## H.F. RADIO PERFORMANCE, VICTA AIRCRAFT

The range and general performance of AWA Skyranger HC-5 H.F. Transceiver, when fitted to aircraft with a fixed aerial, has not been as might be expected. It has been found that significant mis-match occurs with the usual aircraft aerial, using the normal series loading coil. This mis-match causes a loss of power output which may be very considerable.

Victa Airtourer aircraft with their small physical dimensions and consequently, short aerial, are particularly affected.

A.W.A. have issued their Aviation Service Bulletin No. R 15 to describe a modification to improving the transceiver/aerial matching and obtain greatly improved results from the equipment.

Owners desiring to have this A.W.A. Service Bulletin incorporated in existing equipment may have materials supplied at no charge by application to A.W.A. anytime before 12th August, 1966.

VICTA AVIATION DIVISION

A unit of the Victa Group

HORSLEY ROAD, MILPERRA, N.S.W., AUSTRALIA

TELEPHONE: 77-0122. CABLE ADDRESS: "VICTAMO," SYDNEY

VICTA AVIATION DIVISION

A unit of the Victa Group

318 HORSLEY ROAD, MILPERRA, N.S.W., AUSTRALIA TELEPHONE: 77-0122. CABLE ADDRESS: "VICTAMO," SYDNEY

16th September, 1965.

SERVICE LETTER No. 65/1

FUEL CONTENTS INDICATING SYSTEM.

AIRTOURER 100 & 115 AIRCRAFT.

Service Letter 64/3 was issued to inform all Airtourer operators that the fuel contents indicating system fitted to Airtourer aircraft may be susceptible to drift and fluctuations. Since that time, however, the cause was finally located in an intermittent and varying earth return within the transmitter. The provision of a bonding jumper across the float arm pivot has eliminated this problem.

Before the cause of the unsatisfactory operation of the original system was located, a new type of fuel indicator was being developed. Because of several desirable features, the new type development was continued and finally introduced into production at aircraft Serial No. 118. The new system is based on components with years of successful and reliable automotive history, and is highly damped to give a steady reading even while flying in rough air. This damping, however, does make it necessary to delay approximately 30 seconds to take a fuel reading after first switching on the master switch. After this time, the indicator will show the contents continuously until the master switch is switched off.

As with most mechanical or electrical devices, it is unwise to rely entirely on them without an occasional check. The dip stick provides an easy and convenient method to do this. However, as the contents transmitter is toward the rear of the large flat tank, and the dip stick measures toward the front, the aircraft must be approximately level both longitudinally and spanwise. Any error on the dip stick due to aircraft attitude will reflect in the opposite sense on the indicator, giving a wide discrepancy between the two.

The new transmitter and indicator may be retrofitted if desired. The trimmer is deleted and a voltage stabilizer added. Some rewiring is necessary, but is straight forward. The system may be factory installed at a price of £29.15.6. ($59.55) or mod. kit No. B188/1 can be supplied at a cost of £16.5.6. ($32.55)

D.C.A. APPROVED

(iii) The new fabric patch securing a new fastener may now be cemented to the tank, or cemented on top of the flange of the old patch, if it cannot be removed completely. Before a new fastener is attached to the tank, it is advisable, if possible, to have it checked for fit to the mating part in the aircraft structure.

(iv) The press stud fastener assembly is designed to allow lateral float to assist location with the corresponding part in the aircraft structure.

(v) The new "Flexayn" impregnated patch is cemented to the disc and tank surface.

(vi) The cement to be used is the cold-curing adhesive "Boscoprene" J.761, Parts A and B, which should be mixed as described in 1(b)(vii).

The tanks should be touched up where necessary with Neoseal Maintenance Neoprene N.7 Approved No. ABM.20/B/94 applying 2 brush coats.

5. Pressure Test.

Blank off all outlets and pour into tank 2 gallons of Aviation Fuel and then inflate to a pressure of NOT MORE THAN ¼ psi. It is advisable to check the pressure with a mercury manometer. This pressure should be maintained for a period of 20 minutes. If a leak is present, the fuel will reveal its position, in which case it must be marked with a yellow crayon for repair or remedial action.

D.C.A. APPROVED.

3. Replacement of Buttons - Part No. DC.1001. (Continued)
Satisfying this condition will exert less strain on the cement during its initial setting period.

Two coats of mixed J.761 cement should be applied to each surface, allowing ten minutes drying time between each coat. Fifteen minutes after the application of the final coat, the two surfaces should be joined together. If the cement bond breaks at the edge and the cement is pulled into "legs", it is useless to attempt to secure by merely pressing together. The two surfaces must be allowed to dry and be re-cemented locally.

Superbond can be used as an alternative for Boscoprene for the attachment of the buttons. It can be used straight from the tube, no accelerator is required. The method of application and drying times for the cement is the same as for Boscoprene. If the button should be incorrectly positioned it can be released by applying a small quantity of toluol to the join between the two cemented surfaces.

When the button has been replaced, touch up with paint as before.

No load should be put on the button until a period of twenty-four hours has elapsed.

4. Replacement of Press Stud Fasteners.

The fasteners to which this repair instruction applies are the press stud type mounted on a hard disc, which is so assembled as to provide a certain amount of side float. The fasteners are secured to the tank by means of a "Flexayn" impregnated fabric patch.

In the event of the fasteners or their mounting patches becoming damaged, it is necessary to replace the parts completely, adopting the following procedure:-

(i) Carefully peel away the fabric patch securing the fastener to the tank. To assist removal, acetone may be applied sparingly, using a camel hair brush, to the edges of the patch. Thoroughly clean the surface of the tank locally with acetone to remove all paint and any traces of fuel or grease.

In many cases, it may not be possible to peel off the fabric without the risk of causing damage to the tank itself. It is then necessary to cut away the centre of the patch, taking care not to injure the tank, and then remove the damaged fastener and the rigid base to which it was originally attached. Cut away any loose edges and clean the surface as above.

(ii) Obtain a new fastener and patch. Part No. DC.1170.

../6

(b) (vii) Continued.
trapping any air. If a patch is incorrectly positioned, it should be released by applying a small quantity of acetone. After removal the patch and the tank should be re-coated with one layer of "Boscoprene" cement, and after fifteen minutes interval, the patch may be repositioned.

(viii) When the patch is in position, it should be well rolled down, using a hand roller and supporting the underside by a smooth block of material placed on the other side of the tank wall. Care in rolling down the extreme edges of the patch is important.

(ix) When the fabric on the outside of the tank is damaged, a new patch, No. 586, extending 2 inches from the area of the damage, must be treated with one coat of the mixed J.761 cement, and when tacky, secured in position. Finally, apply two coats of Neoseal Maintenance Neoprene N.7 approved No. ABM. 20/B/94 over the area of the new fabric patch.

(x) A period of at least twenty-four hours must elapse before the tank is tested.

2. Repair to Minor Damage to External Coverings.

Where the fabric (No. 586) has been ruptured, it should be peeled back, and one coat of mixed J.761 cement applied to the rubber surface of the bag. When the cement has become tacky, the fabric should be placed carefully into position, using the cement brush for this purpose. A second coat of cement should be added over the area of the damage.

Where the fabric has merely become dislodged from the tank lining, it is only necessary to secure the loosened area by an application of mixed J.761 cement, through the fabric. When the cement has become tacky, the fabric should be held in position until dry.

3. Replacement of Buttons - Part No. DC.1001.

If the head of a moulded button is broken off, the complete button must be replaced. To do this, remove the complete button if possible, but if it is so firmly attached that damage to the tank liner seems inevitable when endeavouring to peel it off, then it must be carefully trimmed with a sharp knife wetted in water, until a reasonable smooth surface is obtained. Since the new button flange is the same dimensionally as the old one, the operator will be able to see the best shape to trim the old flange by trying the new flange on top of the old one during the trimming operation. It is important to try to match the surfaces as nearly as possible, to ensure that the edge of the flange on the new button can be pressed into contact with the old one without undue effort.

../5