AESL

Form No. A.E.S./AIR/1012

SERVICE BULLETIN

AERO ENGINE SERVICES Ltd.
HAMILTON AIRPORT, HAMILTON, NEW ZEALAND

AIRTOURER 100/115/150

No. 001
Issue 5

DATE: 25 July 1972

SUBJECT: Aileron/Flapperon Control System

PURPOSE: Elimination of aileron overbalance by the incorporation of leaf springs and buffer bolts.

EQUIPMENT AFFECTED: Airtourer 100.115 and 150 aircraft. Embodied on aircraft S/N 501 and subsequent.

COMPLIANCE: Optional.

DETAILS: In accordance with Sheets 2, 3 and 4 of this service bulletin.

PARTS REQUIRED: Kit Service Bulletin 001.

APPROVAL: This Service Bulletin is approved in accordance with certificate of design approval No. 71/1.

AFFECT OF WEIGHT & C OF G: Negligible.

PUBLICATIONS AFFECTED: 100 hour Inspection Schedule
Cabin Section
Airtourer Maintenance Manual, Chapter 13.
Paragraphs 1-9.

AESL

Form No. A.E.S./AIR/1012

SERVICE BULLETIN

AERO ENGINE SERVICES Ltd.
HAMILTON AIRPORT, HAMILTON, NEW ZEALAND

INSTALLATION INSTRUCTION

No. 001
Issue 5

1. Remove seats, trim and luggage bay floor.
2. Disconnect trim cables and remove trim lever and arm rest assembly.
3. Disconnect control rods from waggler assembly and control column.
4. Loosen spigots and remove control column assembly.
5. Remove waggler assembly from torque box assembly.
6. Drill two letter "F" holes in waggler in accordance with Drawing No. 52115/A4 and fit buffer bolts and spacers.
7. Refit waggler to control column assembly.
8. Fit reinforcing channels Pt. No. 31736-2 to lower flange of torque tube housing assembly in accordance with Drawing 31710, Issue 2, and drill No. 11 holes for springs and striker attachment in accordance with Drawing 31001, Sht. 6.
9. Fit striker assemblies. Note: If not already present fit AN960-10 washer between head of striker Pt. No. 31739-1 and AN315-3 lock nut.
10. Locate springs Pt.No. 31737-1 and packers Pt.No. 31738-1 in channels and tighten hardware.
11. Refit control column assembly applying grease spec MIL-G-7711A to spring faces and buffer bolts. Note: Buffer bolts should be polished to prevent possibility of scuffing.
12. Reconnect push rod, Pt.No. 52045-1 to waggler. Adjust tube length so that with flaps up, measurement from centre line of push rod Pt. No. 52045-1, attaching bolt to rear flange of torque box support member Pt.No. 31008 is 0.65" (nominal).
    Note: This measurement is taken with control column held in neutral position and a straight edge held on support member flanges. Measure from straight edge to centre line bolt head, with rule held parallel to aircraft centre line.
13. Reconnect push rods Pt. No. 52039-2 to waggler, adjusting for neutral position. If ball ends become out of safety reduce nominal measurement given in Para 12. Adjustment should not exceed 0.10". Use AN24-17A bolts for the attachment of these rods to waggler.
14. Check neutral position, safety, locking of ball-end lock nuts on all push rods and split-pinning of slotted nuts.

SERVICE BULLETIN

AERO ENGINE SERVICES Ltd.
HAMILTON AIRPORT, HAMILTON, NEW ZEALAND

No. 001
Issue 5

Installation Instruction cont.

15. With spring balance check stick force to achieve full aileron.

    Full flap position (4th notch) stick force 7-8 lbs
    " " " (3rd notch) " " 6-7 lbs

    Hook spring balance inside upper corner of spade grip. Record reading as contact is made with travel stop.

16. Adjust striker using AN960-10L washers if required. Increase washers to increase force.

17. Refit trim lever and arm rest assembly. Reconnect elevator trim cables, and elevator control rod.

18. Refit luggage bay floor, trim and seats.

AESL

Form No. A.E.S./AIR/1012

SERVICE BULLETIN

AERO ENGINE SERVICES Ltd.
HAMILTON AIRPORT, HAMILTON, NEW ZEALAND

No. 001
Issue 5

PARTS REQUIRED: Kit Service Bulletin 001
Comprising of:

Qty	Description	Pt. No.
2	Channel	31736-1
4	Spring	31737-1
2	Packer	31738-1
2	Striker	31739-1
2	Nut	AN315-3
2	Washer	AN960-10
4	Washer	AN960-10L
4	Screw	AN525-10-12
6	Nut	AN365-1032
4	Rivet	TLP/D/424
2	Spacer	52115-16
2	Screw	AN24-10A
2	Nut	AN364-428
2	Washer	AN960-416L
2	Screw	AN24-17
6	Pin	AN380-2-2
1	Drawing	31001
1	Drawing	31710
1	Drawing	31737
1	Drawing	31739
1	Drawing	52775

AESL

Form No. A.E.S./AIR/1012

SERVICE BULLETIN

AERO ENGINE SERVICES Ltd.

HAMILTON AIRPORT, HAMILTON, NEW ZEALAND

AIRTOURER 100/115

No. 002
Issue 1
Sheet 1 of 3

DATE: 16-11-67

SUBJECT: Engine Starter Electrical Circuit.

PURPOSE: To provide means of isolating Battery from Starter Circuit.

REASON: To comply with N.Z. Civil Airworthiness Requirements Part III, Leaflet A-2.

EQUIPMENT AFFECTED: All Airtourer 115 Aircraft.

COMPLIANCE: Mandatory for aircraft on N.Z. Register. Recommended all other Airtourer 115 Aircraft.

DETAILS:

Refer to Sheet 3 of this Bulletin and Airtourer Maintenance Manual Chapter 11, Figure 2.

(a) Ensure that Relay is a Cutler Hamer P/N 604H/105A or equivalent, the Relay Contacts are to have a current carrying capacity of 200 AMPS.

(b) Replace Wire P/N 54306/1 connecting + (Positive) Terminal of the Battery to Terminal 1 of Relay, with Wire P/N 54307/2 which has the same current rating as Wire P/N 54304/1 - (Negative)

D. C. A. APPROVED

AESL

Form No. A.E.S./AIR/1012

SERVICE BULLETIN

AERO ENGINE SERVICES Ltd.

HAMILTON AIRPORT, HAMILTON, NEW ZEALAND

AIRTOURER 100/115

No. 002
Issue 1
Sheet 2 of 3

Terminal of Battery to Ground.

(c) Remove and discard Wire P/N 54502/2 - (Negative) Terminal of Battery to Ground and replace with Wire P/N 54504/1.

(d) Remove and discard Wire P/N 54307/1 + (Positive) Terminal of Battery to Starter Relay.

(e) Install Wire P/N 54505/1 and connect between Terminal 2 of Battery Relay and Starter Relay.

PARTS REQUIRED:

Part No.	Description	Qty
54307/2	Wire	1
54504/1	Wire	1
54505/1	Wire	1

PARTS REMOVED:

Part No.	Description	Qty
54306/1	Wire	1
54307/1	Wire	1
54502/2	Wire	1

AFFECT ON WEIGHT AND C. OF G.: Negligible.

PUBLICATIONS AFFECTED: Nil.

D. C. A. APPROVED

AESL

Form No. A.E.S./AIR/1012

SERVICE BULLETIN

AERO ENGINE SERVICES Ltd.

HAMILTON AIRPORT, HAMILTON, NEW ZEALAND

No. 002
Issue 1
Sheet 3 of 3.

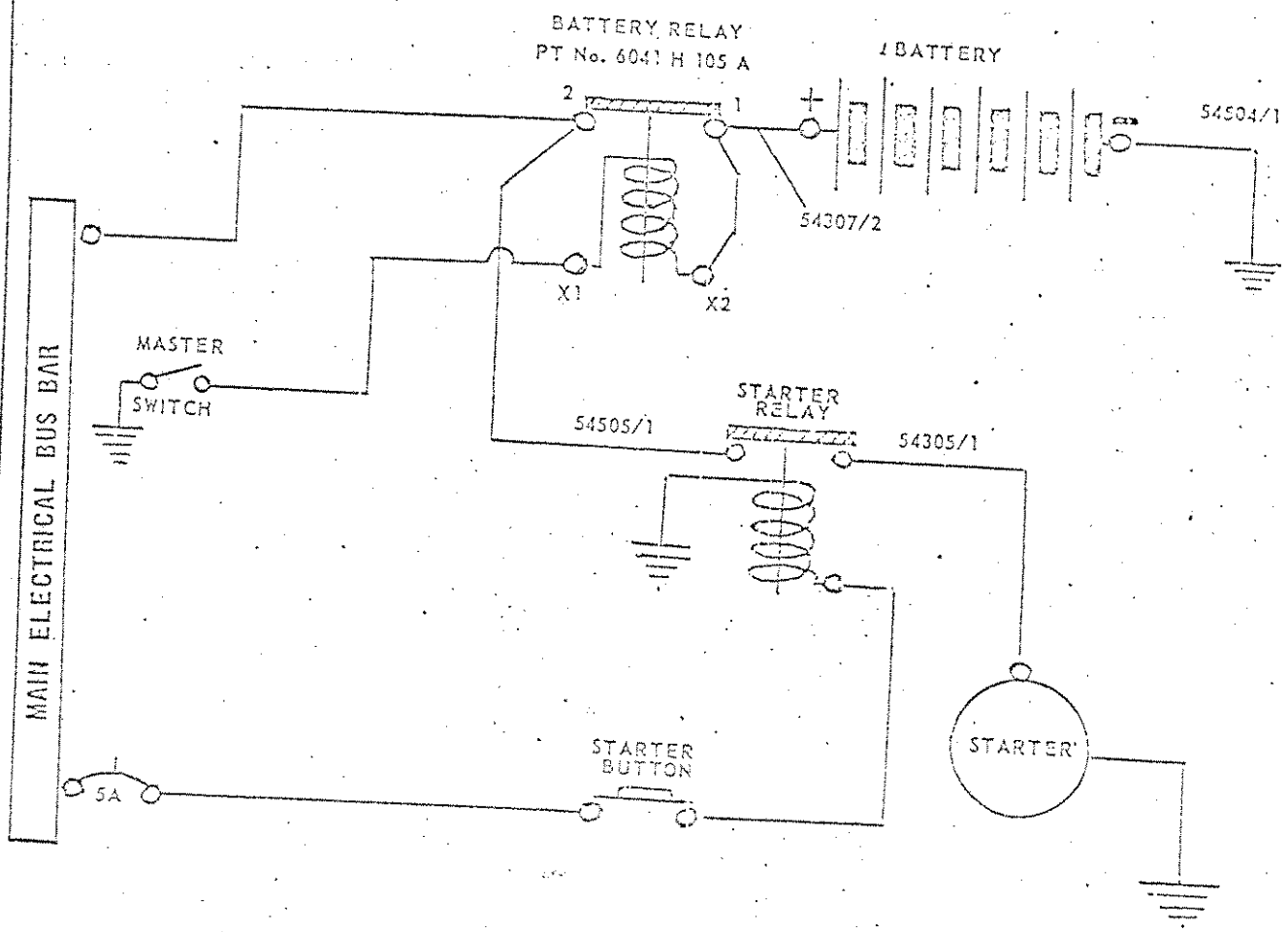

AESL

Form No. A.E.S./AIR/1012

SERVICE BULLETIN

AIRCRAFT ENGINEERING SERVICES Ltd.

HAMILTON AIRPORT, HOMATON, NEW ZEALAND

Date: 5-5-69.

No. 002
Issue 2

Subject: Main Undercarriage Bolts Part No. 02-61033/1

Purpose: To restrict life of bolts.

Reason: To prevent fatigue failure.

Equipment Affected: All A.E.S.L. Airtourer Series 100, 115 and 150 aircraft.

Compliance: Replace bolts at every 500 hours flight time. After 50 hours flight time take weight off main wheels and re-torque inner attachment bolts to 38-42 ft. lbs. with dry thread.

Details:

Remove and discard existing bolts.
Install new bolt in accordance with Airtourer Maintenance and Repair Manual Chapter 16 Para.3.

Parts Required:

Bolt Qty 2. Part No. 02-61033/1

Affect of Weight and C of G:

Nil

Publications Affected:

Nil

D.C.A. Approved

AESL

Form No. A.E.S./AIR/1012

SERVICE BULLETIN

AERO ENGINE SERVICES Ltd.
HAMILTON AIRPORT, HAMILTON, NEW ZEALAND

AIRTOURER 100/115/150

No. 004
Issue 2
Sheet 1 of 2

DATE: 25 July 1972

SUBJECT: Flap Movement

PURPOSE: To reintroduce 4th notch position on flap quadrant.

REASON: To improve short field performance.

EQUIPMENT AFFECTED: Victa Airtourer series and AESL Airtourer 100, 115 and 150 aircraft prior to S/No. 516.

COMPLIANCE: Optional for Victa and AESL Airtourer aircraft in New Zealand. Operators wishing to comply with this Service Bulletin are advised that aircraft S/N 501 through 515 inclusive, except S/N 506 and 509 must be test flown by an appropriately licenced pilot to determine whether -

(a) any excessive wing drop or other undesirable characteristics occur when the aircraft is stalled power on and power off in both level and turning flight, and

(b) approaches and landings including precautionary landings can be safely executed under all normal operating conditions. Overseas operators should contact their local Civil Aviation Authority.

DETAILS:

1. Remove 5 pop rivets attaching retainer plate to rear of flap segment.
2. Remove plate.
3. Refit 2 new rivets attaching segment to rear channel.

PARTS REQUIRED: Qty 2 tucker pop rivet part no. TLP/K/429.

AESL

Form No. A.E.S./AIR/1012

SERVICE BULLETIN

AERO ENGINE SERVICES Ltd.
HAMILTON AIRPORT, HAMILTON, NEW ZEALAND

No. 004
Issue 2
Sheet 2 of 2

APPROVAL: This Service Bulletin is approved in accordance with certificate of design approval no. 71/1.

AFFECT OF WEIGHT & C OF G: Negligible

PUBLICATIONS AFFECTED: Nil.

ARSL

Form No. A.E.S./AIR/1012

SERVICE BULLETIN

AIRCRAFT ENGINEERING SERVICES Ltd.
HAMILTON AIRPORT, HAMILTON, NEW ZEALAND

Airtourer 100/115/150

No. 005
Issue 2

26 October 1969

Sheet 1 of 2

Subject: Fuel System - Flexible Fuel Cells - Preservation.

Purpose: To obviate the possibility of the inner lining drying out and cracking when fuel is not present, a preservation procedure to coat the liner with oil to act as a temporary plasticizer is introduced.

Reason: When synthetic rubber fuel cells are placed in service, the gasoline has a tendency to extract the plasticizer from the inner line of the cell. This extraction of plasticizer is not detrimental as long as gasoline remains in the fuel cell, inasmuch as the gasoline itself will act as a suitable plasticizer.

Equipment Affected: A.E.S.L. Airtourer aircraft with Dunlop Flexible fuel tank, pt. no. DC 1311, DC 3681 or DC 3824 installed.

Compliance:

1. Whenever it is evident that all serviceable fuel cells which have contained gasoline will remain without fuel for more than five days, whether installed in aircraft or not, or if fuel cells are to be collapsed or deformed inside their bays, the preservation procedure detailed below is to be implemented.

2. Any flexible fuel cell which is unserviceable, but is classified "Repairable" should be treated in a similar manner.

Details:

1. For cells installed in aircraft - blank off main fuel feed line prior to preservation treatment.

2. A thin coating of light grade engine oil should be flushed, sprayed or rubbed onto all faces of the cell inner liner.

3. The cell should not be removed or handled until 24 hours after the oil has been applied.

C.A.A. Approved

ABSL

Form No. A.E.S./AIR/1012

SERVICE BULLETIN

HAMILTON AIRCRAFT, HAMILTON, NEW ZEALAND Ltd.

Airtourer 100/115/150

No. 005
Issue 2

4. At reassembly the internal and external faces of the sump and filler neck apertures must be completely dry. Before offering up the stud nuts, clamp plates etc., wipe over internal and external faces of all apertures with a petrol soaked cloth to remove all traces of inhibiting oil.

5. Flush out oil and fuel lines with gasoline prior to further service.

Effect on Weight and C.G.: N.A.

Source: Dunlop Aviation Australia letter 570 dated 13 August, 1968.

Publications Affected: Nil.

SUPPLEMENTARY DRAWING INDEX TO INCLUDE
AT 150 SERIES AND DESIGN IMPROVEMENTS
TO ALL SERIES.

90,000

GA Dynafocal Engine Mounting	90011
Details of Saddle (Dynafocal Mounting)	90012
Split Engine Cowling	× 90013
Reinforcement of Wing Front Spar	× 90014
Repositioning of Battery Box	× 90019
Reinforcement of Tailplane Rear Spar	× 90015
Baffle Assembly Schedule	× 90020
Exhaust Manifold	90021
Modification to Fuselage	× 90022
G.A. Engine Installation	× 90025
Spinner and Propeller Installation F.P.	× 90027 90026
Spinner Back Plate	90028
Spinner Front Plate Fixed Pitch	90029
Spinner Fixed Pitch	90030
Spinner and Propeller Constant Speed Installation.	× 90031
Spinner Front Plate Constant Speed Installation.	90032
Spinner For Constant Speed Propeller	90033
Installation Lever Type Throttle Controls	90034
Electrical Wiring Diagram	90035
Instrument Panel Layout	90036
Instrument Panel Layout (Constant Speed Propeller)	90037
Electric Flap System	90038
Details Electric Flap	90039
Oil Separator	90040
Details Oil Separator	90041
Front Fuse. Assy. 115,150, and Super 150	90042
Fuselage Assy. 115,150 and Super 150	90043
Front Spar Assy. 115,150 and Super 150	90044
Frame Assy. Wing, 115, 150 and Super 150	90045
Covered Wing Assy. 115, 150 and Super 150	90046
Frame Assy - Tailplane 115, 150 and Super 150	90051
Covered Assy - Tailplane 115, 150 and Super 150	90052
Aircraft Assembly 150 & Super 150	90053

AESL

Form No. A.E.S./AIR/1012

SERVICE BULLETIN

AERO ENGINE SERVICES Ltd.
HAMILTON AIRPORT, HAMILTON, NEW ZEALAND

Airtourer 100/115

No. 006
Issue 3
Sheet 1 of 8

Date: 24th July 1969

This Issue Supercedes and Cancels Issue 2 of this Service Bulletin.

Subject: Strengthening of Structure and conversion to 150 H.P. Lycoming engine.

Purpose: To increase maximum all up weight and improve performance.

Equipment affected: All A.E.S.L. & Victa aircraft on the New Zealand Register with the exception of aircraft S/N 530 and subsequent. These aircraft have Parts A, B, and C incorporated during manufacture.

Compliance: Optional

This conversion may only be carried out by Maintenance Organisations approved by Aero Engine Services Limited.

Operators wishing to comply with this Bulletin must advise Serial Number of aircraft affected.

Details:

Part A.	Reinforcement of wing front spar.
Part B.	Reinforcement of fuselage.
Part C.	Reinforcement of tailplane rear spar.
Part D.	150 H.P. Lycoming engine installation with fixed pitch propeller and repositioning of battery box.
Part E.	150 H.P. Lycoming engine Installation with constant speed propeller.

Refer to Maintenance and Repair Manual for removal of Mainplane and Tailplane.

NOTE On completion of this modification, the Serial Number of the Aircraft must be prefixed by the letter "A".

M.O.T. Approved

M.O.T. [illegible]

AESL

Form No. A.E.S./AIR/1012

SERVICE BULLETIN

AERO ENGINE SERVICES Ltd.
HAMILTON AIRPORT, HAMILTON, NEW ZEALAND

Parts Required: "Kit A" Comprising of: -

Qty	Part No.	Description
2	90026-4	ZED Member
2	90014-3	Strap
1	90014-4	Doubler
1	90014-5	Doubler
1	90014-6	Doubler
1	90014-7	Doubler
160	AN470-AD4-9	Rivet
70	AN470-AD4-10	Rivet
20	AN470-AD5-4	Rivet
12	AN470-AD5-8	Rivet
30	AN470-AD5-12	Rivet

Drawing No's: 90014
90026

"Kit B" Comprising of: -

Qty	Part No.	Description
2	90022-1	Reinforcing
2	90022-2	Packer
1	90022-3	Channel
1	90022-4	Channel
2	90022-5	Tie Plate
2	90022-6	Reinforcing
1	90022-7	Reinforcing
1	90022-8	Reinforcing
1	90022-9	Tie Plate
1	90022-10	Tie Plate
1	90022-11	Gusset

M.O.T. Approved

AESL

Form No. A.E.S./AIR/1012

SERVICE BULLETIN

AERO ENGINE SERVICES Ltd.
HAMILTON AIRPORT, HAMILTON, NEW ZEALAND

"Kit B" Continued: -

Qty	Part No.	Description
1	90022-12	Gusset
2	90022-13	Strap
20	TLP/D/426	Rivet
91	TLPD-424BS	Rivet
50	TLPD-428BS	Rivet
8	AN 470-AD5-5	Rivet
20	AN 470-AD5-6	Rivet
14	AN 470-AD5-7	Rivet
4	AN 470-AD5-20	Rivet
20	AN 470-AD4-7	Rivet
2	AN 470-AD4-8	Rivet
14	AN 470-AD4-21	Rivet
2	AN 470-AD4-18	Rivet
16	AN 426-AD5-7	Rivet
14	AN 426DAD4-4	Rivet
14	AN 4022/0510	Rivet
2	AN 3-12	Bolt
4	AN 3-11	Bolt
6	AN 960-10	Washer
6	AN 310-3	Nut
6	AN 380-2-3	Split Pin
5	270	Oddie Stud
1	54100/2	Mount - Battery
5	212	Oddie Clip
5	214	Oddie Washer
1	90019-1	Doubler

M.O.T. Approved

AESL

Form No. A.E.S./AIR/1012

SERVICE BULLETIN

AERO ENGINE SERVICES Ltd.
HAMILTON AIRPORT, HAMILTON, NEW ZEALAND

"Kit C" Continued: -

Qty	Part No.	Description
8	90015-4	Gusset
2	90015-3	Gusset
1	90015-2	Reinforcing
1	90015-1	Reinforcing
20	AN 470-AD-4	Rivet

Drawing No. 90015.

"Kit D" Comprising of: -

Qty	Part No.	Description
1	Lyconing 0-320-E2A	Engine
1	74DM6S5	Propeller Kit
1	90011/1	Dynafocal Engine Mount
4	475-110	Shock Mount Kit
1	90021-1	Exhaust Muffler Shroud
1	90030-1	Spinner
1	90028-1	Spinner Back Plate
1	90029-1	Spinner Front Plate
1	90020	Set Cooling Baffles
1	54603/1	Bonding Lead
1	3526250	Oil Cooler "Harrison"
1	90012	Split Cowl
1	90025-20	Lug
2	AN6-H11A	Bolt
4	AN6-H17A	Bolt
4	AN7-34	Bolt
1	AN4-4A	Bolt

N.O.T. Approved

AESL

Form No. A.E.S./AIR/1012

SERVICE BULLETIN

AERO ENGINE SERVICES Ltd.
HAMILTON AIRPORT, HAMILTON, NEW ZEALAND

"Kit D" Continued: -

Qty	Part No.	Description
12	AN 960-616L	Washer
8	AN 960-716	Washer
1	AN 960-416	Washer
4	AN 960-PD10	Washer
4	AN 310-7	Nut
1	AN 365-428	Nut
4	AN 365-1032C	Nut
4	AN 525-10-7	Screw
8	AN 526-6-8	Screw
8	AN 960-6	Washer
1	48017/2	Tube
1	48303/2	Hose
1	AN 816-5	Adapter

Drawing NO's: 90013, 90020, 90027, 90025, 90024

"Kit E" Comprising of: -

Qty	Part No	Description
1	Lycoming O-320-E1A	Engine
1	Hartzell HC-C2YL-1A	Propeller
1	H-1	Constant Speed Unit
1	345-001-109	Constant Speed Control
1	AN 816-2	Union
1		Manifold Pressure Gauge
1	90031-1	Stay
1	90021-2	Manifold Press Line
1	90032-1	Spinner Front Plate
1	90031-4	Spinner Back Plate
1	90033-1	Spinner

AESL

Form No. A.E.S./AIR/1012

SERVICE BULLETIN

AERO ENGINE SERVICES Ltd.

HAMILTON AIRPORT, HAMILTON, NEW ZEALAND

No. 006
Issue 3
Sheet 7 of 8

"Kit E" Continued : -

Qty	Part No.	Description
5	AN4-4A	Bolt
5	AN 960-416	Washer
8	AN 526-6-8	Screw
8	AN 960-6	Washer
4	AN 526-10-6	Screw
1	90011/1	Dynafocal Engine Mount
4	475-110	Shock Mount Kit
1	90020	Set Cooling Baffles
1	54602/1	Bonding Lead
1	8526250	Oil Cooler "Harrison"
1	90013	Split Cowl
1	90021-1	Exhaust Muffler Shroud
1	90025-20	Lug
2	AN6-H11A	Bolt
4	AN6-H17A	Bolt
4	AN7-34	Bolt
12	AN960-616L	Washer
8	AN960-716	Washer
4	AN960-PD10	Washer
4	AN 310-7	Nut
1	AN 365-428	Nut
4	AN 365-1032C	Nut
4	AN 525-10-7	Screw
1	48017/2	Tube
1	48303/2	Hose
1	AN 816-5	Adapter

M.O.T. Approved.

AESL

Form No. A.E.S./AIR/1012

SERVICE BULLETIN

AERO ENGINE SERVICES Ltd.
HAMILTON AIRPORT, HAMILTON, NEW ZEALAND

No. 006
Issue 3
Sheet 8 of 8

"Kit E" Continued: -

Drawing No. 90018, 90020, 90025, 90031, Sheets 1,2, & 3.

NOTE: When all parts A,B,C,D or E are incorporated the maximum all up weight is increased to: -

1750 lbs	Normal Category
1650 lbs	Aerobatic Category

Effect of Weight & C. of G.

Part A	4lbs	+84.5	338.0
Part B	2lbs	+80.0	160.0
Part C	2lbs.	+236	472.0
Total A,B,C.	8lbs	+121.25	970.0
Part D	50lbs	+93.0	4650.0
Total A,B,C,D.	58lbs	+96.8	5620.0
Part E	56lbs	+72.0	4680.0
Total A,B,C,E.	73lbs	+77.4	5650.0

Publications Affected:

Flight Manuals - A59 for 150: A61 For Super 150.

Pilots Handbook - Issued March 1969

Maintenance & Repair Manual - Issued April 1969

Parts Book - Issued June 1969

M.O.T. Approved

AMSL

Form No. A.M.S./AIR/1012

SERVICE BULLETIN

AMSL AVIATION LTD.
WINTON AIRPORT, HAMILTON, NEW ZEALAND

AIRCOMMAND 115/150/Super 150

No. 007
Issue 1

DATE: 23-5-80

SUBJECT: Oil Trap in Engine Breather System. Mod AES/AT/1007

PURPOSE: To prevent Oil Spillage During Aerobatic Manoeuvres.

APPLICABLE AIRCRAFT: All A.M.S.L. 115, 150 & Super 150 Aircraft
All Victa 115 Aircraft.

COMPLIANCE: OPTIONAL

DETAILS: Carry out Installation in Accordance with Drawing No. 90040.

PARTS REQUIRED: Kit Comprising Of: -

	Qty 1	Oil Trap	Part No. 90041-1
	Qty 4	Jubilee Clip	Size "0"
	Qty	Nylon Hose	N.P.N.
	Qty 1	Flexible Hose	Part No. SF111-300-340-10-0210
	Qty 1	Tube	Part No. 90041-2
	Qty 1	Elbow	Part No. AN838-10D
	Qty 17	Rivet	Part No. TLP/D/410
(115 Only)	Qty 1	Grommet	Part No. AN931-11-16
	Qty 1	Drawing	90040

MODIFICATIONS AUTHORISED: NIL

NOT Approved:

AESL

Form No. A.E.S./AIR/1012

SERVICE BULLETIN

AERO ENGINE SERVICES Ltd.

HAMILTON AIRPORT, HAMILTON, NEW ZEALAND

Airtourer 100/115/150 Series.

No. 008
Issue 1
Page 1 of 2

Date: 14 July 1969

Subject: Introduction of Spring Suspension Type Fuel Cell Part No. DC 8881 in lieu of, or by conversion of Rubber Stud Type Part No. DC 1311. MOD/AES/AT/1008

Purpose: Design improvement subsequent to reported defects in service of fuel cell DC 1311.

Equipment Affected: All A.E.S.L. Airtourer series aircraft.

Compliance: Optional

Details: Remove existing fuel cell Part No. DC 1311 in accordance with Airtourer Maintenance Manual Chapter 14 Paragraph 18.

Install modified type cell Part No. DC 8881 as follows:-

Cut 4 Only 1¼" Holes in Underpan Outer Skin to Provide Access to Suspension Holes in Underpan Inner Skin in accordance with Drawing 48144 Issue 2.

Remove Luggage Bay Floor & Seat Upholstry.

Layout Fuel Cell in correct position in Mainplane.

Carefully Hook one End of Each Suspension Wire Into Relative Holes in Under and Overpan.

Feed A Loop of Lockwire Into Tank Bay and Hook on to the Free End of the Suspension Wires and One at a Time Pull Through Holes & Secure. Top Wires First.

Check All Suspension Wires are Correctly fitted and fit sealing Grommets Part No. GRO 1-1 to Access Holes In Cockpit Lower Skin and Underpan Outer Skin.

Fit Filler Neck and Sump Plate.

AESL

Form No. A.E.S./AIR/1012

SERVICE BULLETIN

AERO ENGINE SERVICES Ltd.
HAMILTON AIRPORT, HAMILTON, NEW ZEALAND

New Zealand operators can have their existing tanks modified by A.E.S.L. Hamilton Airport.

Australian operators should despatch existing cells to A.E.S.L. Australia Limited, Bankstown Airport, New South Wales for modification.

Operators in other countries should contact their local A.E.S.L. Distributor for details.

Parts Required:

Qty	1	Fuel Cell Part No. DC 3601
Qty	4	Grommet Part No. GRO 1-1
Qty	1	Drawing No. 48144 Issue 1.

Affect of Weight & C. of G. Nil

Publications Affected: Nil

M.C.T. Approved.

Form No. A.E.S./AIR/1012

SERVICE BULLETIN

MOTOR UNITS Ltd.

HAMILTON AIRPORT, HAMILTON, NEW ZEALAND

No. 009
Issue 1

Date: 3 July 1969

Subject: Alternative Larger Tyres on Main Wheel Units
MOD. AM3/AT/1011.

Reason: To Improve Ground Handling On Uneven Surface.

Equipment Affected: All A.E.S.L. and Victa Aircraft

Compliance: Optional

Details: Refer Airtourer Maintenance and Repair Manual
Chapter 16, Paragraph 3.
Remove Main Wheels
Remove Existing 500-5 Tyres
Fit 600-5 Tyres using existing 500-5 Tube. Inflate Tyre to 25 P.S.I.
Refit Main Wheels.

Note: The Above Details apply only to Wheels fitted with tubed tyres.
To embody this Service Bulletin on Wheels fitted with tubeless tyres, Hubs must be reworked by an A.E.S.L. Approved Servicing Depot.

Parts Required: Qty 2 Tyre 16 x 6.00-5

M.O.T. Approved.

AESL

Form No. A.E.S./AIR/1012

SERVICE BULLETIN

AERO ENGINE SERVICES Ltd.
HAMILTON AIRPORT, HAMILTON, NEW ZEALAND

No. 010
Issue 1

AIRTOURER 100/115/150

Date: 29 October 1969

Subject: Fuel contents check, with dip stick.

Purpose: To allow for discrepencies between dip stick and gauge readings.

Reason: As the fuel contents transmitter and fuel filler neck are not on the same plane, readings will differ if the aircraft is not level.

Equipment Affected: All Airtourer aircraft except S/N A526, A536, A538, A542 and subsequent.

Compliance: Whenever dip stick readings are taken.

Details: Make notice from local sources, containing the following information, and adhere to starboard fuselage side adjacent to the fuel filler access.

1. Ensure aircraft is level fore and aft.
2. Check dip stick reading at least three times.
3. Use carefully to ensure maximum accuracy.

Parts Required: Nil

Publications Affected: Nil

M.O.T. Approved

AHSL

Form No. A.E.S./AIR/1012

SERVICE BULLETIN

AERO ENGINE SERVICES Ltd.

HAMILTON AIRPORT, HAMILTON, NEW ZEALAND

Airtourer 115/150

No. 011
Issue 1

DATE: 28 October 1969

SUBJECT: Loss of oil steering crank mechanism bolt end.

REASON: To prevent failure of bolt and its sources.

DETAIL: Cases have been reported of the bolt and threaded end to the nose wheel steering rod. Inspection of the threaded portion, which has been attributed to the existing bolt end having a hollow shank, a solid shank bolt end is now available.

INSTRUMENT AFFECTED: Airtourer aircraft prior to Serial No. 516

COMPLIANCE: Mandatory

DETAIL: Remove existing bolt and part No. TRE-4. Install bolt and part No. RM4GU. Check adjustment, safety and lock nut. Ensure slotted nut attaching bolt and to rudder linkage is secure and split pinned.

PARTS REQUIRED: Bolt end, Part No. RM4GU.

PUBLICATIONS AFFECTED: Airtourer Parts Book.

AESL

Form No. A.E.S./AIR/1012

SERVICE BULLETIN

AERO ENGINE SERVICES Ltd.
HAMILTON AIRPORT, HAMILTON, NEW ZEALAND

AIRTOURER 115/150

No. 012
Issue 1
MOD AES/AT/1012

Date: 28 October 1969

Subject: Fuel filler access.

Purpose: To improve fuel tank filling and obtain accurate dip stick readings with comparable fuel gauge readings.

Reason: Existing tanks have been difficult to fill and dip stick readings inaccurate.

Equipment Affected: All Airtourer aircraft prior to Serial No. A5.4, except A526, A536 and A538. Aircraft Serial No. A542 and subsequent will have this modification embodied during manufacture.

Compliance: Optional

Details: The fuel filler access is now repositioned further aft, thus allowing "straight in" filling. The original rubber elbow and dip stick is discarded and a straight dip stick provided.

Operators in New Zealand requiring this modification (AES/AT/1012) should contact Aero Engine Services Ltd, Hamilton Airport, Phone 36-144, regarding kitsets and rework details.

Operators in other countries should contact their local A.E.S.L. distributor.

Australia - Aero Engine Services Ltd,
Bankstown Airport,
N.S.W. Phone 709 4622

United Kingdom - Glos-Air Limited
Staverton Airport
Cheltenham,
Gloucestershire. Phone Churchdown [illegible]

N.O.T. Approved

AESL

Form No. A.E.S./AIR/1012

SERVICE BULLETIN

AERO ENGINE SERVICES Ltd.
HAMILTON AIRPORT, HAMILTON, NEW ZEALAND

No. 013
Issue 1

DATE: 6.6.70

SUBJECT: Introduction of Airtourer T6/12 and T6/24 aircraft.

PURPOSE: To increase all up weight to 1900 lbs semi aerobati and 1800 lbs fully aerobatic and comply with F.A.R Part 23.

REASON: To provide greater endurance for aerobatic sorties.

EQUIPMENT AFFECTED: Production aircraft.

COMPLIANCE: N.A.

DETAILS: Refer manufacturer

PARTS REQUIRED: N.A.

PUBLICATIONS AFFECTED: Airtourer Maintenance Manual
Airtourer Parts Book

AESL

Form No. A.E.S./AIR/1012

SERVICE BULLETIN

AERO ENGINE SERVICES Ltd.
HAMILTON AIRPORT, HAMILTON, NEW ZEALAND

PART A

No. 014
Issue 1

DATE: 6.10.70

SUBJECT: Landing Light Airtourer Aircraft

PURPOSE: To introduce dual landing lights in port mainplane in lieu of single unit in nose cowl.

REASON: To provide improved night landing facilities and stand-by light if one fails.

EQUIPMENT AFFECTED: All Airtourer aircraft.

APPROVAL: This Service Bulletin is M.O.T./C.A.D. approved.

COMPLIANCE: Optional

DETAILS: Refer manufacturer.

PARTS REQUIRED: Refer manufacturer.

PUBLICATIONS AFFECTED: Servicing schedules.

M.O.T. APPROVED

AESL

Form No. A.E.S./AIR/1012

SERVICE BULLETIN

AERO ENGINE SERVICES Ltd.
HAMILTON AIRPORT, HAMILTON, NEW ZEALAND

No. 014
Issue 1
Sheet 2 of 2

PART B

DATE: 6.10.70

SUBJECT: Stall Warning Lift Detector

PURPOSE: To reposition lift detector to starboard wing.

REASON: When dual landing lights are fitted in port wing. Refer part A of this Service Bulletin.

EQUIPMENT AFFECTED: All Airtourer aircraft with dual landing lights incorporated.

APPROVAL: This Service Bulletin is M.O.T./C.A.D. approved.

COMPLIANCE: Optional.

DETAILS: Refer Drawing No. 12022.

PARTS REQUIRED: Refer manufacturer.

PUBLICATIONS AFFECTED: Nil.

M.O.T. APPROVED

AESL

Form No. A.E.S./AIR/1012

SERVICE BULLETIN

AERO ENGINE SERVICES Ltd.
HAMILTON AIRPORT, HAMILTON, NEW ZEALAND

No. 015
Issue 1

DATE 24-2-71

This Service Bulletin is cancelled.

AESL

Form No. A.E.S./AIR/1012

SERVICE BULLETIN

AERO ENGINE SERVICES Ltd.
HAMILTON AIRPORT, HAMILTON, NEW ZEALAND

No. 016
Issue 1

DATE: 17.11.70

SUBJECT: Fireproofing of service lines.

REASON: To satisfy requirements for final certification of aircraft certificated in New Zealand under provisional C.T.A. only.

EQUIPMENT AFFECTED: All Airtourer T6 aircraft prior to Serial No. B557.

APPROVAL: This Service Bulletin is M.O.T./C.A.D. approved and is classified as mandatory by M.O.T./C.A.D.

COMPLIANCE: All affected T6 aircraft at next 100 hour inspection. Optional on all other Airtourer series.

PARTS REQUIRED: Refer manufacturer.

DETAILS: Refer manufacturer.

PUBLICATIONS AFFECTED: Nil

M.O.T. APPROVED.

AESL

Form No. A.E.S./AIR/1012

SERVICE BULLETIN

AERO ENGINE SERVICES Ltd.
HAMILTON AIRPORT, HAMILTON, NEW ZEALAND

No. 017
Issue 1

DATE: 17.11.70

SUBJECT: Installation of water drain cock in fuel filter bowl.

REASON: To satisfy requirements for final certification of aircraft certificated in New Zealand under provisional C.T.A. only.

EQUIPMENT AFFECTED: All Airtourer T6 aircraft prior to Serial No. B558

APPROVAL: This Service Bulletin is M.O.T./C.A.D. approved and is classified as mandatory by M.O.T./C.A.D.

COMPLIANCE: All affected T6 aircraft at next 100 hour inspection. Other Airtourer series optional.

DETAILS: Refer manufacturer.

PARTS REQUIRED: Refer manufacturer.

PUBLICATIONS AFFECTED: Nil

AESL

Form No. A.E.S./AIR/1012

SERVICE BULLETIN

AERO ENGINE SERVICES Ltd.
HAMILTON AIRPORT, HAMILTON, NEW ZEALAND

No. 018
Issue 1

DATE: 19.11.70

SUBJECT: Brake Unit

ORIGIN: Dunlop Service Bulletin 32-08

PURPOSE: Introduction of six drive block units in lieu of twelve.

REASON: To reduce manufacturing costs and reduce maintenance.

EQUIPMENT AFFECTED: All AESL production Airtourer series aircraft when existing stocks are exhausted.

APPROVAL: This Service Bulletin is M.O.T./C.A.D. approved.

COMPLIANCE: All future production from aircraft S/No. A554. Replacement spares for aircraft prior to this will be supplied as for six block units not twelve.

DETAILS:

A. Embodiment Instructions

1. From each main wheel, remove 6 (six) intermediate drive blocks leaving 6 (six) number equally spaced on wheel periphery.
2. From the 6 number drive blocks remaining, remove existing attaching screws and securing split pins. Replace with new screws introduced.
   NOTE: It is essential that new type screws are fitted dry and fully tightened.
3. If the existing brake friction disc is in a serviceable condition, and is of the "12 slot" configuration this can be re-installed. Future spares supplies will be of "6 slot" configuration.

B. Method of Identification

Compliance with this service bulletin changes unit and detail part numbers as follows:-
Re-identify accordingly.

C. Parts Affected

AESL

Form No. A.E.S./AIR/1012

SERVICE BULLETIN

AERO ENGINE SERVICES Ltd.
HAMILTON AIRPORT, HAMILTON, NEW ZEALAND

No. 018
Issue 1

Parts affected cont'd

New Part No.	Qty Per Unit	Description	Old Part NO	Instructions Disposition
(a) 5.00 - 5 Tubeless Tyre Unit				
DM.1175	-	Main Wheel, Tyre, Brake & Axle Unit STBD	DM.1130	Modified
DM.1176	1	Main Wheel, Tyre, Brake & Axle Unit PORT	DM.1131	Modified
		Comprising:-		
DW.1404	1	Main Wheel	DW.1190	Modified
DW.1405	1	Half Hub - Drive	DW.1182	Modified
-	12	Unbrako Screw C'sk Type K Socket Head	3/16" BSW x ½"long	Redundant
-	12	Split Pin	SP.9/C6	Redundant
3/16" B.S.W.	6	Unbrako Screw "Locwell" type C'sk Socket Head Screw	-	
DW.1406	6	Drive Block	DW.1295	Redundant
DB.1582	-	Brake Unit STBD	DB.1462	Modified
D.B.1580	-	Brake Unit PORT	DB.1460	Modified
DB.1579	1	Friction Disc	DB.1339	Redundant
(b) 16 x 6.00 - 5 tyre and tube Unit				
DM.1173	-	Main Wheel, Tyre, Tube Brake & Axle Unit STBD	DM.1130	Modified
DM.1174	1	Main Wheel, Tyre, Tube Brake & Axle Unit PORT	DM.1131	Modified
		Comprising:-		
DW.1401	1	Main Wheel	DW.1190	Modified
DW.1402	1	Half Hub Drive	DW.1182	Modified
DW.1403	1	Half Hub Valve	DW.1147	Modified

..... 3

AESL

Form No. A.E.S./AIR/1012

SERVICE BULLETIN

AERO ENGINE SERVICES Ltd.
HAMILTON AIRPORT, HAMILTON, NEW ZEALAND

No. 018
Issue 1

-	12	Unbrako Screw C'Sk Type	3/16" B.S.W.	Redundant
-	12	Split Pin	SP9/C6	Redundant
3/16" B.S.W. x ½" long	6	Unbrako Screw "Locwell" Type C'Sk Socket Head Screw	-	
DW.1406	6	Drive Block	DW.1295	Redundant
DB.1582	-	Brake Unit STBD	DB.1462	Modified
DB.1580	-	Brake Unit PORT	DB.1460	Modified
DB.1579	1	Friction Disc	DB.1339	Redundant

PUBLICATIONS AFFECTED: Airtourer Parts Book

M.O.T. APPROVED

AESL

Form No. A.E.S./AIR/1012

SERVICE BULLETIN

AERO ENGINE SERVICES Ltd.
HAMILTON AIRPORT, HAMILTON, NEW ZEALAND

DOT AD. VPT 37

No. 019
Issue 1

DATE: 24-11-70

SUBJECT: Airtourer undercarriage attachment assy. in mainplane.

PURPOSE: To prevent ribs part No. 13002/15, 13002/16, 10217/1, 10217/2, 10219/1 & 10219/2 cracking at flanges in service.

REASON: A number of cases have been reported of subject ribs on earlier aircraft being found cracked.

EQUIPMENT AFFECTED: All Victa and A.E.S.L. aircraft; all series with the exception of Serial No. B542, B546, B552, B553, A555, B557 and subsequent.

APPROVAL: This Service Bulletin is MOT/CAD approved.

COMPLIANCE: Optional but recommended at complete overhaul.

AESL

Form No. A.E.S./AIR/1012

SERVICE BULLETIN

AERO ENGINE SERVICES Ltd.
HAMILTON AIRPORT, HAMILTON, NEW ZEALAND

No. 019
Issue 1
Sheet 2 of 8

DETAILS: Part A. For operators who wish to carry out this repair scheme as a preventative measure if subject ribs are found to be serviceable :

1. Support aircraft at jacking and trestle points with wheels off ground.

2. Lower undercarriage fairings and disconnect brake pipes.

3. Remove undercarriage attachment bolts and remove main undercarriage legs complete.

4. Remove walkway material.

5. Remove wingroot fairings.

6. Remove wing skins, inboard upper, port & stbd.

7. Refer Parts B or C if ribs found cracked.

8. Remove lower ¼" Dia bolts 2 port and 2 Stbd. and rivets in outboard box spar rib flanges to facilitate fitting of steel brackets Pt. No. 90110-1.

9. Position bracket Pt. No 90110-1 & clamp to rib ensuring existing ¼" Dia holes are equidistant between 4 strengthening webs on bracket.

10. Back drill 2 15/64" Dia holes and ream ¼"Dia slave bolt bracket in position & drill six No. 21 Dia rivet holes in bracket and rib.

    NOTE: AN10-32 bolts may be used to replace rivets if desired. Drill 5/32" Dia rivet holes through bracket flange from rib flange.

11. Remove slave bolts, deburr, apply coat of jointing

compound to mating surfaces and bolt and rivet bracket in position. Do not rivet rib flange until doubler Part No. 90107-1 is in position.

12. Drill out 5/32" rivets in bottom skin, removing existing doublers to facilitate fitting of doublers 90107-1 & 10055-1.

13. Ensure tight fit between doublers & back drill from existing 5/32" Dia holes.

14. Csk. Rivets in doubler 90107-1.

15. Remove doublers, deburr, apply jointing compound to mating surfaces and rivet.

16. Clean and inspect internally and refit top skin using avdel and pop rivets as required.

17. Replace walk way material.

18. Refit undercarriage, connect and bleed brake system and refit fairings.

19. Lower aircraft.

Part B. For operators who find subject ribs cracked and wish to have complete undercarriage box section reworked by manufacturer :

1. Support aircraft at jacking and trestle points with wheels off ground.

2. Lower undercarriage fairings and disconnect brake pipes.

3. Remove undercarriage attachment bolts and remove main undercarriage legs complete.

SERVICE BULLETIN

AERO ENGINE SERVICES Ltd.
HAMILTON AIRPORT, HAMILTON, NEW ZEALAND

4. Remove walkway material.

5. Remove wing root fairings.

6. Remove wingskin, upper inboard, port & stbd.

7. Remove unserviceable undercarriage box assy. by drilling out rivet through bottom skin, main spar and rear spar.

8. Dispatch unserviceable undercarriage box to AESL Hamilton. Retain intercostals for re-use.

9. Fit modified undercarriage box and rivet to bottom skin, leaving out rivets covered by doublers Part No. 90107-1 and 10055-1, and spars.

10. Re-rivet intercostals to undercarriage box.

11. Position doublers on bottom skins and rivet in position. Note Two outboard rows csk 120° to suit rivets supplied.

12. Clean and inspect internally and rivet top skin using avdel and pop rivets as required.

13. Replace walkway material.

14. Refit undercarriage, connect and bleed brake system and refit fairings.

15. Lower aircraft.

SERVICE BULLETIN

AERO ENGINE SERVICES Ltd.
HAMILTON AIRPORT, HAMILTON, NEW ZEALAND

No. 019
Issue 1

Part C. For operators who find subject ribs cracked and wish to carry out complete repair scheme of their own facilities :

1. Support aircraft at jacking and trestle points with wheels off ground.

2. Lower undercarriage fairings and disconnect brake pipes.

3. Remove undercarriage attachment bolts and remove main undercarriage legs complete.

4. Remove walkway material.

5. Remove wing root fairings.

6. Remove wings skins, upper inboard port & stdb.

7. Drill out rivets securing damaged rib.

8. Remove bolts and intercostals as required to enable removal of damaged rib.

9. Locate new rib, drill off, deburr, apply jointing compound to mating surfaces and rivet in position.

10. If both ribs are cracked, complete installation of first rib before drilling off second.

11. Remove lower ¼" dia bolts 2 port and 2 stbd. and rivets in outboard box spar rib flanges to facilitate fitting of steel brackets Part No. 90110-1

12. Position bracket Part No 90110-1 and clamp to rib ensuring existing ¼" Dia holes are equidistant between 4 strengthening webs on bracket.

13. Back drill 2 15/64" Dia holes and ream ⅛" Dia. Slave bolt bracket in position and drill six No. 21 Dia rivet holes in bracket and rib.

    NOTE: AN 10-32 Bolts may be used to replace rivets if desired. Drill 5/32" Dia rivet holes through bracket flange from rib flange.

14. Remove slave bolts deburr, apply coat of jointing compound to mating surfaces and bolt and rivet bracket in position. Do not rivet rib flange until doubler Part No. 90107-1 is in position.

15. Drill out 5/32" rivets in bottom skin removing existing doublers to facilitate fitting of doublers 90107-1 & 10055-1.

16. Ensure tight fit between doublers and back drill from existing 5/32 Dia holes.

17. CSK. Two outboard rows to suit 120° Csk rivets in doubler 90107-1.

18. Remove doublers deburr, apply jointing compound to mating surfaces and rivet.

19. Clean and inspect internally and refit top skin using avdel and pop rivets as required.

20. Replace walk way material.

21. Refit undercarriage, connect and bleed brake system and refit fairings.

22. Lower aircraft.

PARTS REQUIRED

Part A.

90107-1	Doubler	2 off
90110-1	Bracket	2 off
90000-22	Cork strip	2 off
-	Walk way material	7 ft.
4002 -0500	Avdel Rivet	228
4002 -0510	Avdel Rivet	14
4002 -0512	Avdel Rivet	24
4002 -0514	" "	16
4002 -0415	" "	6
4002 -0413	" "	2
4002 -0411	" "	6
4002-0400	" "	42
TLP/D/419	Pop	20
TLP/D/424	Pop	72
TLP/D/429	Pop	4
TLP/D/520	Pop	24
AS 2230-506	120° Solid	26
AS 2230-507	" "	26
AN 470-AD 5-5	Solid	33
Drawing No. 10223		

Part B.

AS FOR PART C.

Minus following :-

AN 470-AD 5-5	Solid rivet	20
AN 470-AD 5-5	Solid rivet	30

SERVICE BULLETIN

AERO ENGINE SERVICES Ltd.
HAMILTON AIRPORT, HAMILTON, NEW ZEALAND

No. 019
Issue 1
Sheet 8 of 8

Part C.

90107-1	Doubler	2 off
90110-1	Bracket	2 off
00006-22	Cork strip	2 off
-	Walkway material	7 ft.
4002 -0508	Avdel Rivet	228
4002 -0510	" "	14
4002 -0512	" "	24
4002 -0514	" "	16
4002 -0415	" "	8
4002 -0413	" "	14
4002 - 0411	" "	26
4002 -0409	" "	86
4022 -0413	" "	4
TLP/D/419	Pop	48
TLP/D/424	Pop	172
TLP/D/429	Pop	10
TLP/D/435	Pop	38
TAP/D/320	Pop	24
AN-470-AD 4-5	Solid Rivet	28
AN 470-AD 4-7	" "	8
AN 470-AD 4-10	" "	14
AN 470-AD 5-9	" "	14
AN 470-AD 5-8	" "	24
AN 470-AD 5-6	" "	100
AN 470-AD 5-5	" "	136
AS 2230-507	120° Solid	26
AS 2230-506	" "	26

Drawing No. 10223

FIRST

Form No. A.E.S./ATR/1012

SERVICE BULLETIN

ABRO ENGINE SERVICES

Hamilton Airport, Hamilton, New Zealand Ltd.

No. 007

Issue 1

Sheet 1 of 1

DATE: 1.3.71

To be issued at a later date.

Form No. [illegible]

[illegible]

AERO ENGINE SERVICES

[illegible] Ltd.

No. 001

Issue

[illegible]

DATE: 5.11.70

SUBJECT: Improved Bearings in Rudder Bar Shafts

PURPOSE: To provide improved bearings as parts for aircraft [illegible] all up weight of 1900 lbs, certificated in New Zealand under provisional C.T.A. in order to satisfy requirements for final certification.

REASON: Existing needle roller bearings, Part No. D66 are inadequate for loads imposed at max. all up weight of 1,00 lbs.

EQUIPMENT AFFECTED: All Airtourer T6 aircraft prior to Serial No. D501.

APPROVAL: This Service Bulletin is M.O.T./C.A.D. approved and has been classified as mandatory by M.O.T./C.A.D.

COMPLIANCE: All affected T6 series aircraft. At next 100 hour inspection. Optional for all other series.

DETAILS:

1. Refer manufacturers parts book, part [illegible], [illegible] 33.
2. Disconnect and remove port and starboard brake handles at brake torque tube.
3. Disconnect brake master cylinder push rod at torque tube.
4. Disconnect rudder push rod Part No. 530A9/1 from rudder pedal torque tube hanger.
5. Disconnect nose wheel steering push rod part no. 530A7/5 from rudder pedal torque tube hanger.
6. Remove qty 4 bolts port and qty 4 bolts starboard attaching rudder pedal torque tube bearing blocks Part No. 52A15/2 port and 52A15/1 starboard to fuselage.
7. Lift rudder pedal torque tube and remove blocks from each end.

Form No. A.E.S./AIR/1612

SERVICE BULLETIN

AERO ENGINE SERVICES Ltd.

HAMILTON AIRPORT, HAMILTON, NEW ZEALAND

No. 321

Issue 1

8. Remove split pins from clevis pins attaching link assembly 52451/1 (qty 2). Remove clevis pins part no. 52406/1 (AN396-25) (qty 2) and retain clevis pins. Remove link assembly.

9. Press out needle bearings part no. D66 from each link assembly and discard.

10. Press in plain shor-lube bearings part no. 52449/1 to each link assembly.

11. Reassemble in reverse order to above.

PARTS REQUIRED:

Qty 2 Bearing Part No. 52449/1
Qty 2 Split Pin, Part No. AN380-3-3

PUBLICATIONS AFFECTED:

Airtourer Parts Book

M.O.T. APPROVED