ASSOCIATED INSTRUCTION MANUALS

Overhaul Manual	Lycoming 0-320 Engine	60294-7
Parts Manual	Lycoming 0-320 Engine	PC103
Operators Manual	Lycoming 0-320 Engine	60297-16
Owners Manual	Hartzell	115
Repair Manual	Sensenich	N.P.N.

June 1970

AIRTOURER T4, T5 and T6

Supplement

As the Airtourer T4, T5 and T6 have only slight technical airframe differences to the 100 and 115 series, this supplement deals only with those differences and relevant power plant data. All other data will be found in the section dealing with the 100 and 115 aircraft and is common to all series.

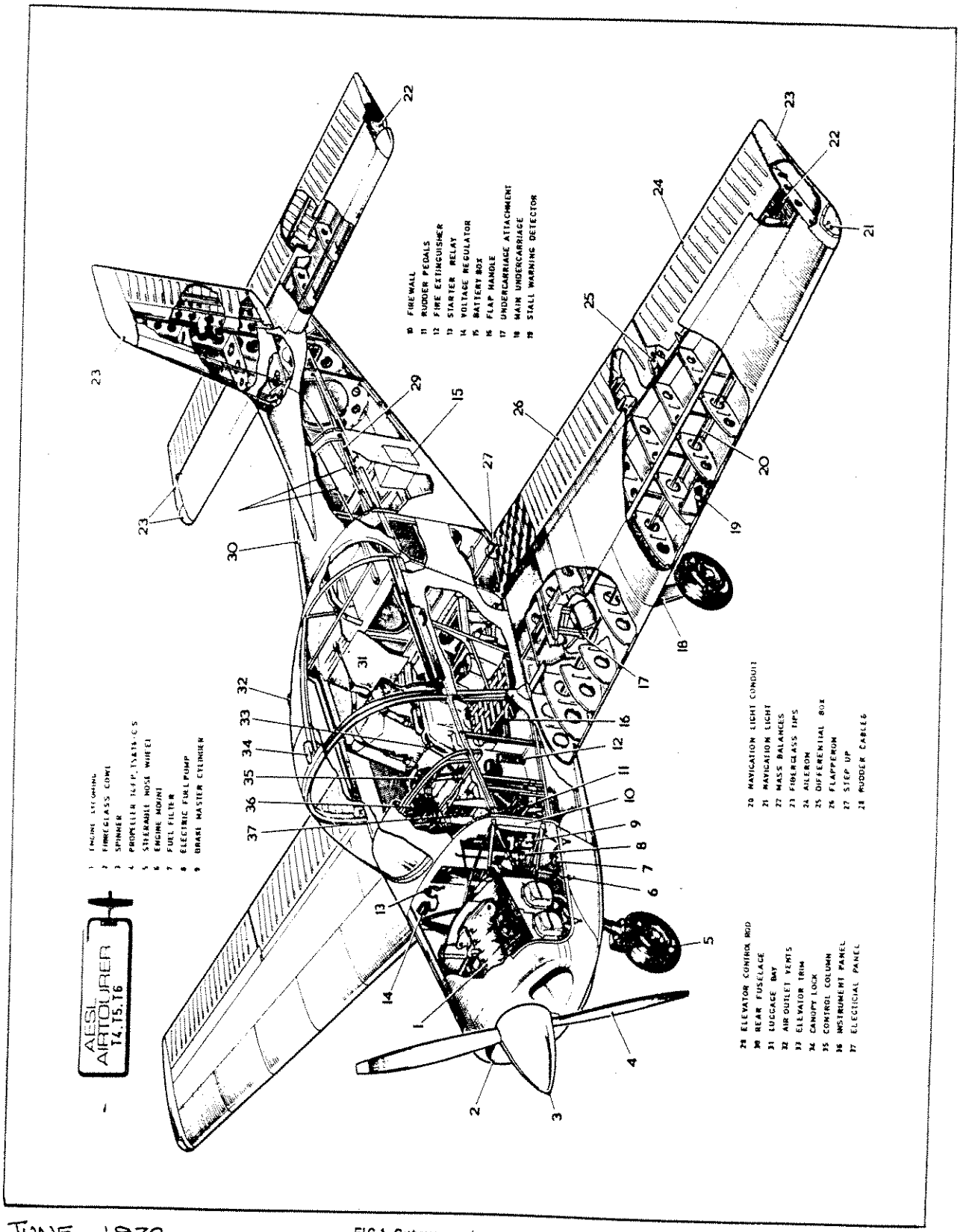

FIG.1 Cutaway view of aircraft

DIMENSION AND AREA

GENERAL

Wing span	26'0"
Length overall	22'0"
Height	7' approx.
Ground angle	4°

WINGS

Incidence at root	3°
Dihedral (upper surface)	6°
Area	120 sq. ft.
Aspect ratio	5.7
Flapperon area total	18 sq. ft.
Aileron area total	8.68 sq. ft.

EMPENNAGE

Fin area	5.6 sq. ft.
Rudder area	6.5 sq. ft.
Rudder height	4'0"
Fin and rudder offset	Nil
Elevator area	13.6 sq. ft.
Tailplane area	15.5 sq. ft.
Tailplane span	10'10"
Tailplane incidence	0°
Tailplane dihedral	0° - 24' measured at rib chord plane

FUSELAGE

Width max.	3'6"
Height (fuselage bottom to top of canopy)	4'6"
Length (without engine and mount)	16'8"

LANDING GEAR

Wheelbase	60.12"
Main gear track static	9'6"
Tyre size	T4, T5 - 5 x 500 T6 - 5 x 600

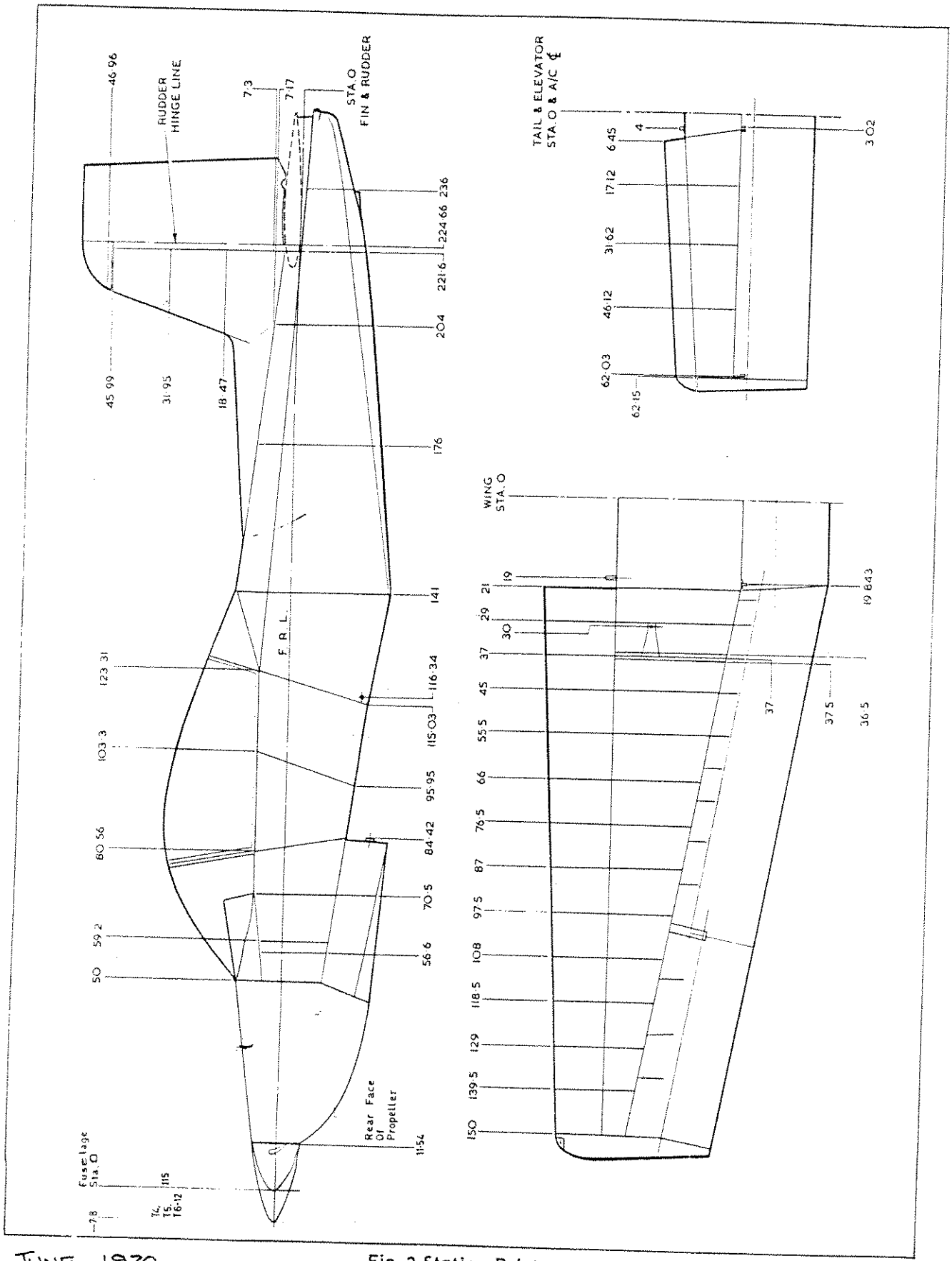

Fig. 2 Station Points.

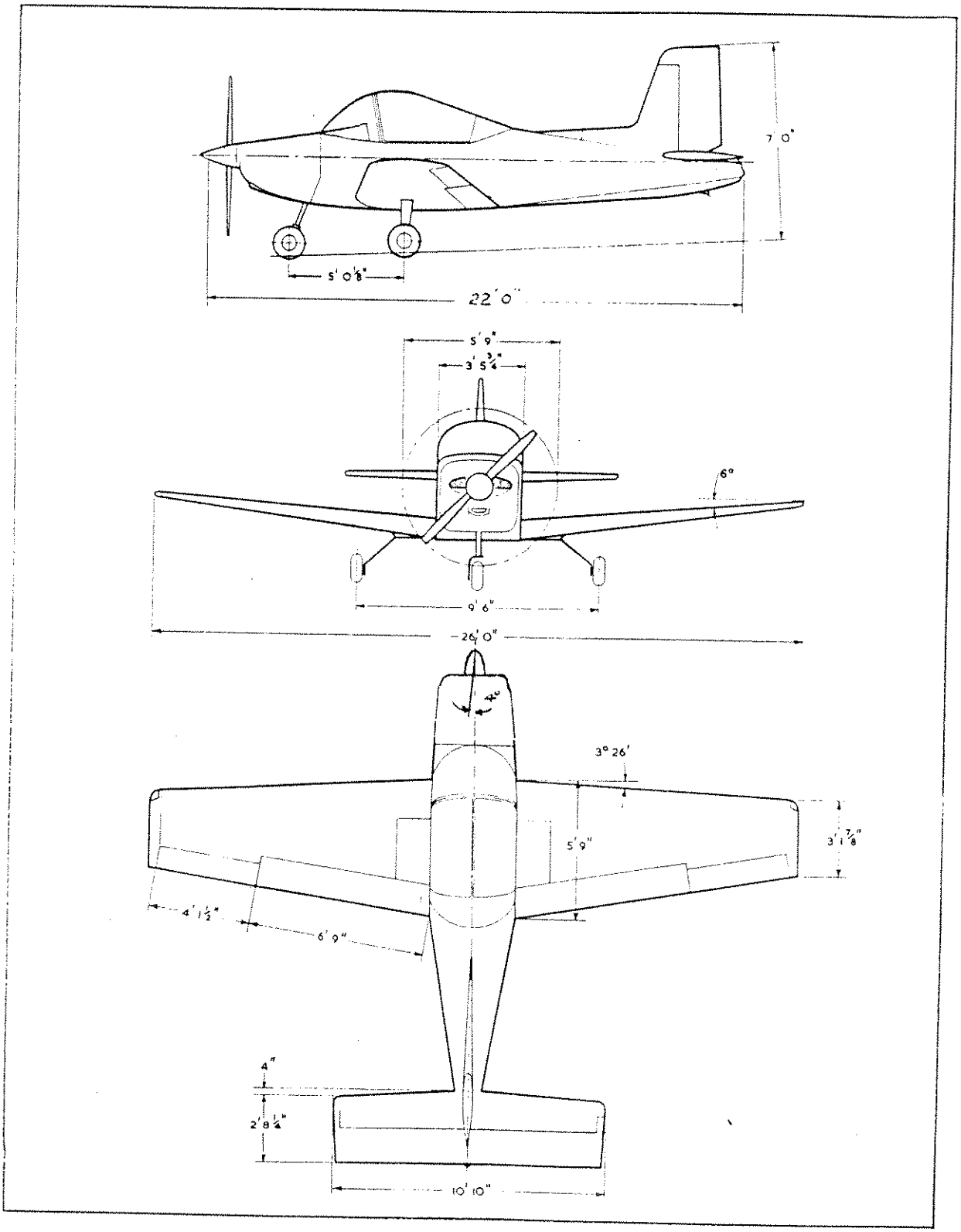

Fig. 2. Principle dimensions T4, T5, & T6.

AIRCRAFT WEIGHT DATA

WEIGHT SUMMARY

Based on typical weighing	T4. T5	T6
Structure, including undercarriage	675	700
Power Plant	358	368
Fixed equipment	142	182
Empty weight, standard equipment	1175	1250
Maximum take-off weight	-	1900
Maximum aerobatic weight	-	1800
Useful load		
Pilot and passenger	340	340
Max. Fuel (29 galls. IMP)	209	209
Oil (7Qts. IMP)	15.2	15.2
Baggage	100	86

OPTIONAL EQUIPMENT

The following optional equipment may be fitted:-

ITEM	Wt. lbs.	Arms ins.	Moment lb. ins.
Bend::,: CNS 220 Transceiver	5.8	62	359.6
AWA VHF Transceiver	6	62	372
HF Transceiver	11	62	682
Cabin Speaker	0.5	103	51.5
Artificial Horizon	2.8	64	179.2
Directional Gyro	2.6	64.5	167.7
Rate of Climb Indicator	1.0	64.5	64.5
Carb. Temp. 4 Bulb Adaptor	0.S	65.00	52.0
Cyl. head temp. gauge) Thermoccuple & leads)	1.2	66.5	79.7
Fuel pressure gauge & pipes	0.7	66.5	46.6
Clock	0.4	66.5	26.6
Outside temp. gauge	0.1	69.00	6.9

INSTRUMENT PANELS

The instrument panels are in two sections, the shock mounted panel which carries the major flight and engine instruments, and a fixed sub-panel located above the control pedestal which carries the flap and trim position indicators, ammeter, vacuum gauge, fuel contents gauge and clock.

INSTRUMENTS

The following instruments may be fitted:-

- Altimeter
- Airspeed Indicator
- * Turn and Balance Indicator
- * Rate of Climb Indicator
- * Artificial Horizon
- * Directional Gyro
- Tachometer
- Triple oil pressure, temperature and fuel pressure gauge
- Manifold Pressure Gauge
- * Carburettor Inlet Temperature Gauge
- * Cylinder Head Temperature Gauge
- * Outside Air Temperature Gauge
- Compass
- Fuel Contents Gauge
- Ammeter
- * Flap Position Indicator
- * Elevator Trim Indicator
- Vacuum Indicator

* These instruments are optional installations.

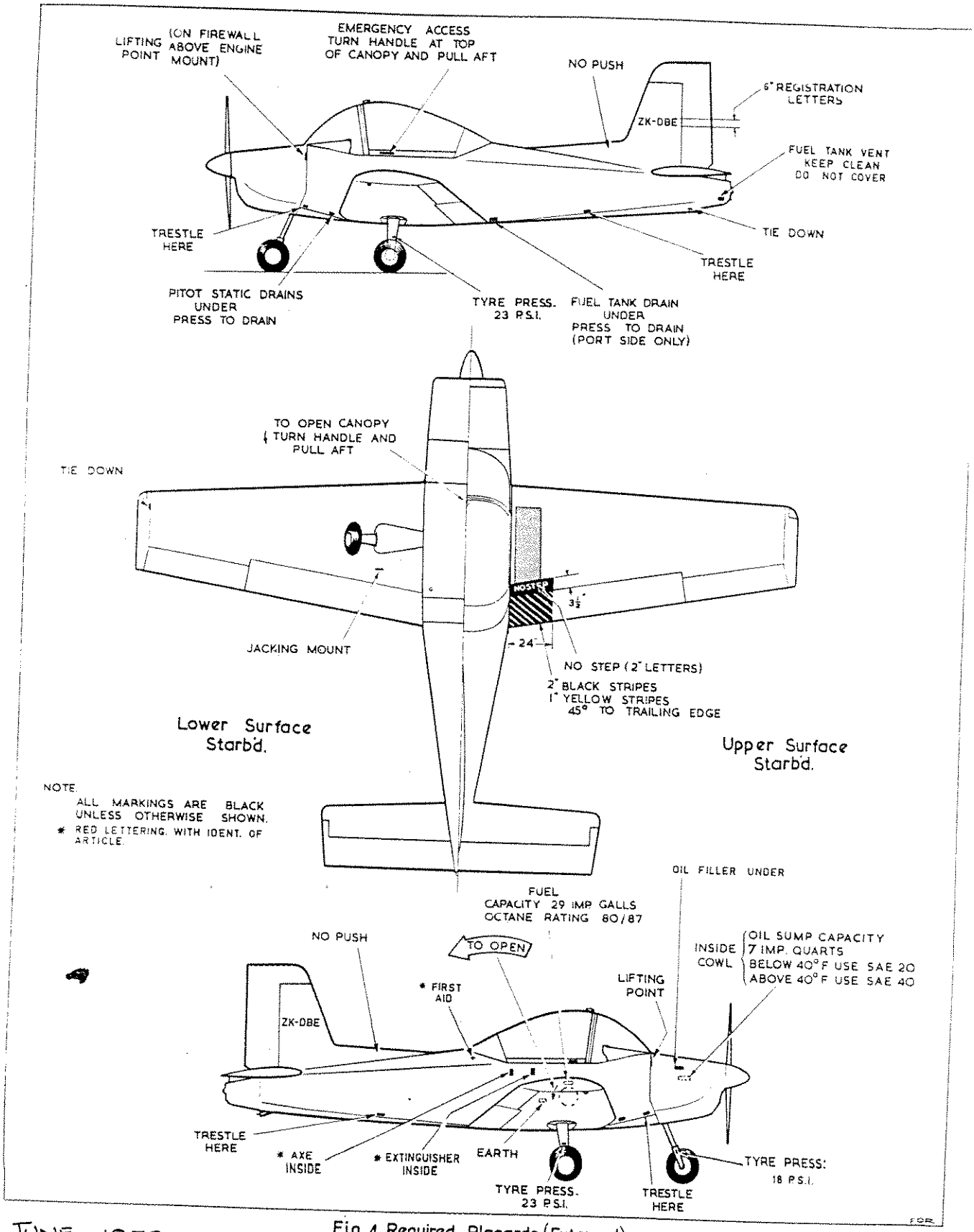

Fig. 4 Required Placards (External)

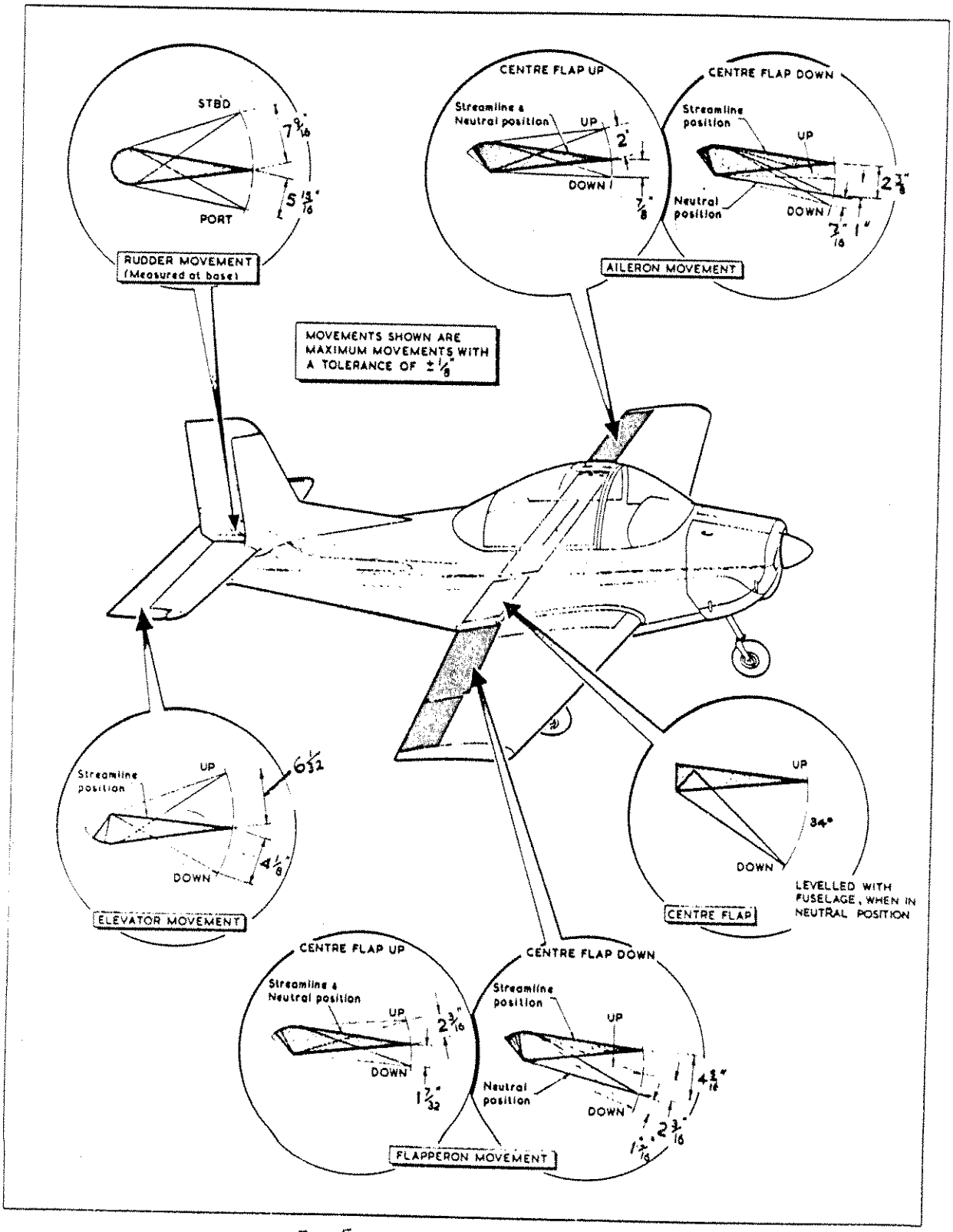

Fig. 5. Control Surface Movements

DAILY INSPECTION

Carry out all items in accordance with Airtourer 100/115 maintenance manual Chapter 8 Pages 8-2 to 8-4 inclusive plus the following:-

Airtourer T5, T6

1. Inspect Constant Speed Unit for security.

2. Inspect Constant Speed Control for full and free movement.

Airtourer T4, T5, T6

3. Inspect Oil Cooler for security of attachment.

100 HOURLY INSPECTION

Carry out all items in accordance with Airtourer 100/115 Maintenance Manual Chapter 8 Pages 8-5 to 8-14 inclusive plus the following:-

Airtourer T4, T5 & T6

1. Remove split cowling to obtain access to engine.

2. Remove valve rocker covers, inspect valve gear for condition.

Note: Valve rocker clearance (hydraulic tappets collapsed) ".028 - ".080.

Airtourer T5, T6

3. Inspect Constant Speed Unit for security.

4. Inspect Constant Speed Control for full and free movement.

Ground run-up procedure Lycoming O-320-E engine. In accordance with Airtourer 100/115 Maintenance Manual Chapter 9 Page 9-3 and 9-4 with the following exceptions:-

1. Oil pressure 60-90 P.S.I. Normal
   100 P.S.I. Maximum (starting and warm-up)

Add the following:-

2. <u>Airtourer T5, T6</u>

Exercise propeller at 1800 R.P.M. by moving constant speed control fully rearwards. Note drop in R.P.M.

Return constant speed control to full fine position (forward). R.P.M. should return to original reading.

Check maximum R.P.M. - 2700.

ELECTRICAL SYSTEMS

ELECTRIC POWER SUPPLY SYSTEM

The electrical power system is a 12 volt D.C. single wire earth return system, consisting of a battery, alternator, voltage and current regulator, starter, starter solenoid switch, battery master relay, lights, and an electric panel containing the ammeter circuit breakers and switches. All low tension wiring is installed in open looms suitably supported by clips and protected by plastic tubing where necessary.

BATTERY

A 12 volt multi-cell, wet type battery of 24 ampere-hours capacity is installed within a battery box mounted in the rear fuselage. The battery is accessible by a hinged panel on the fuselage port side. The battery may be isolated from the rest of the system by means of the battery relay controls by the master switch on the electrical panel.

MAINTENANCE OF BATTERY

Apart from topping up checking the free vent, non spill drain plugs and cleanings, very little maintenance is required on the battery.

BATTERY BOX

The battery box is contained within a moulded fibreglass box mounted on the left hand side of the rear fuselage. This box incorporates rails on which the battery can slide out to facilitate topping up and checking. A drain tube extends from the bottom of the box and is routed through the bottom of the fuselage to provide an air outlet for fumes and to carry any spilled acid away from the aircraft.

BATTERY MASTER RELAY

The battery master relay is mounted adjacent to the battery. It is a solenoid operated, bridge type contactor and is actuated by the master switch when ON.

MASTER SWITCH

The master switch is located on the left hand side of the electrical panel. When in the OFF position the battery and master relay is isolated from the bus.

ALTERNATOR POWER SYSTEM

The Alternator Prestolite Model Ale 8406 with a rated output of 40 amps at 12 volts, is located on the right front side of the engine and is belt driven by a pulley wheel, is concentric to and integral

ALTERNATOR POWER SYSTEM (cont'd)

with the starter ring gear.

VOLTAGE REGULATOR

The voltage regulator fitted to the Airtourer is a Prestolite Model V.S.F. 7201. The voltage regulator is installed on the right hand front face of the firewall. The regulator controls the current in the alternator field winding, to ensure that the battery is correctly charged. The unit will automatically reduce the charging rate as the battery becomes fully charged. The charging rate should be 2-5 amps. With a normal electrical load.

ALTERNATOR FIELD SWITCH

This is located alongside the master switch on the electrical panel. Turning the switch OFF opens the alternator field circuit, thus stopping the alternator output.

ALTERNATOR ISOLATION CIRCUIT BREAKER

The press to reset alternator isolation circuit breaker is situated next to the alternator field switch on the electrical panel. The isolation circuit breaker protects the alternator power system from a short circuit in the battery power system and vice versa.

AIRCRAFT LIGHTING SYSTEM

Aircraft lighting equipment consists of navigation lights and cockpit lights. Landing light and rotating beacon are fitted as optional extras.

COCKPIT LIGHTS

Two reheostat controlled red cockpit lights are fitted to the overhead panel on the canopy. Each light can be individually adjusted for position and for size of light from spot to flood. Bakelite hood is removable for replacement of lamp. Cockpit lights will only operate with the navigation lights switched on.

AESL
AIRTOURER
T4, T5, & T6

STALL WARNING

An audible stall warning circuit is embodied in the aircraft electrical system, consisting of a lift detector switch, built into the leading edge of the port wing and wired to a warning horn, located under the luggage compartment floor. Adjacent to the horn is a micro switch controlled by the flap lever push rod. With the flaps down, as for landing, the push rod is moved forward allowing the switch to close. When stalling is imminent, air flow conditions actuate the lift detector switch, thus sounding the horn. When the flaps are raised, the push rod moves backwards, depressing the switch and isolating the horn.

NOTE:

A warning light may be fitted in lieu of the horn, depending on local Civil Aviation requirements.

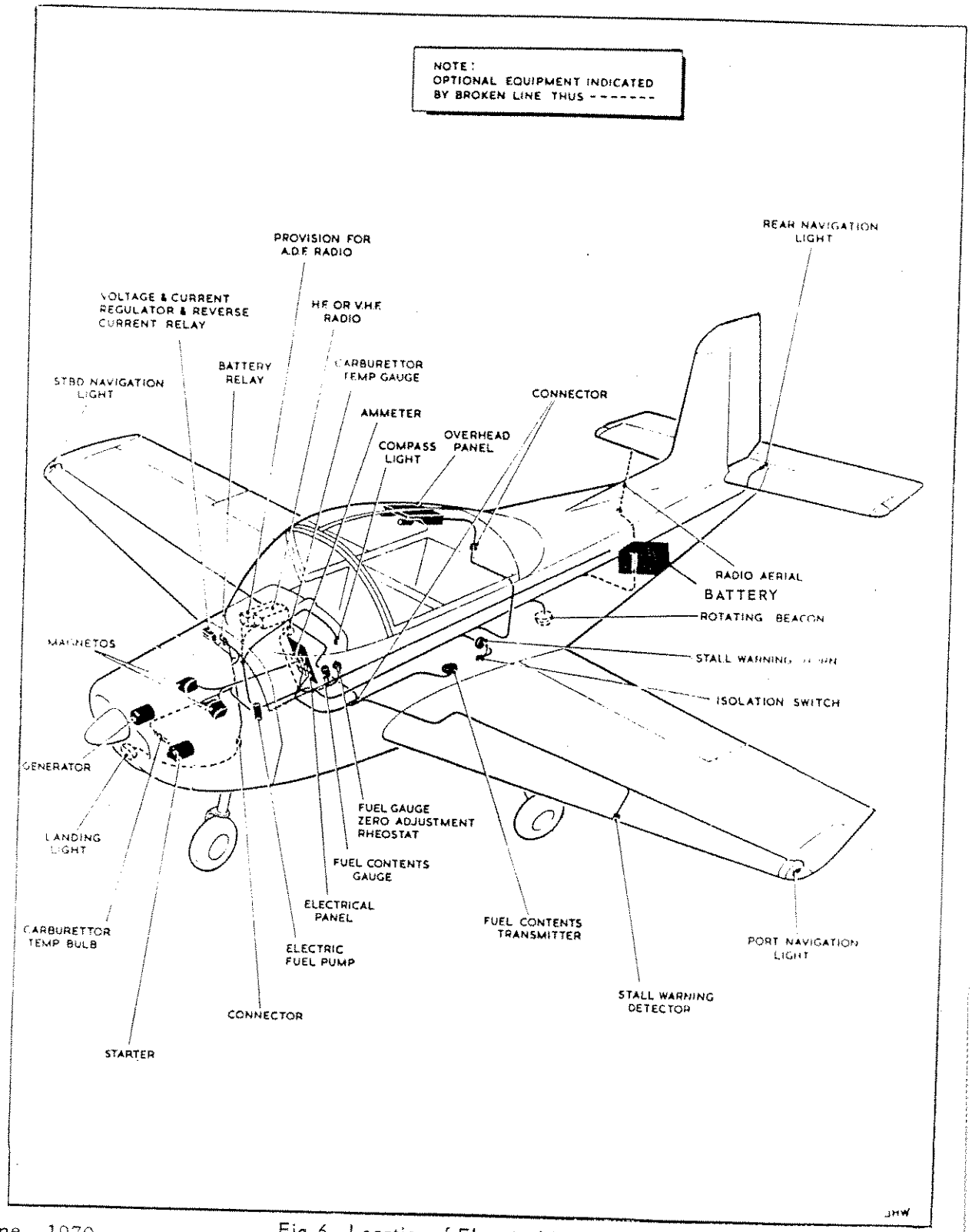

Fig 6. Location of Electrical Units.

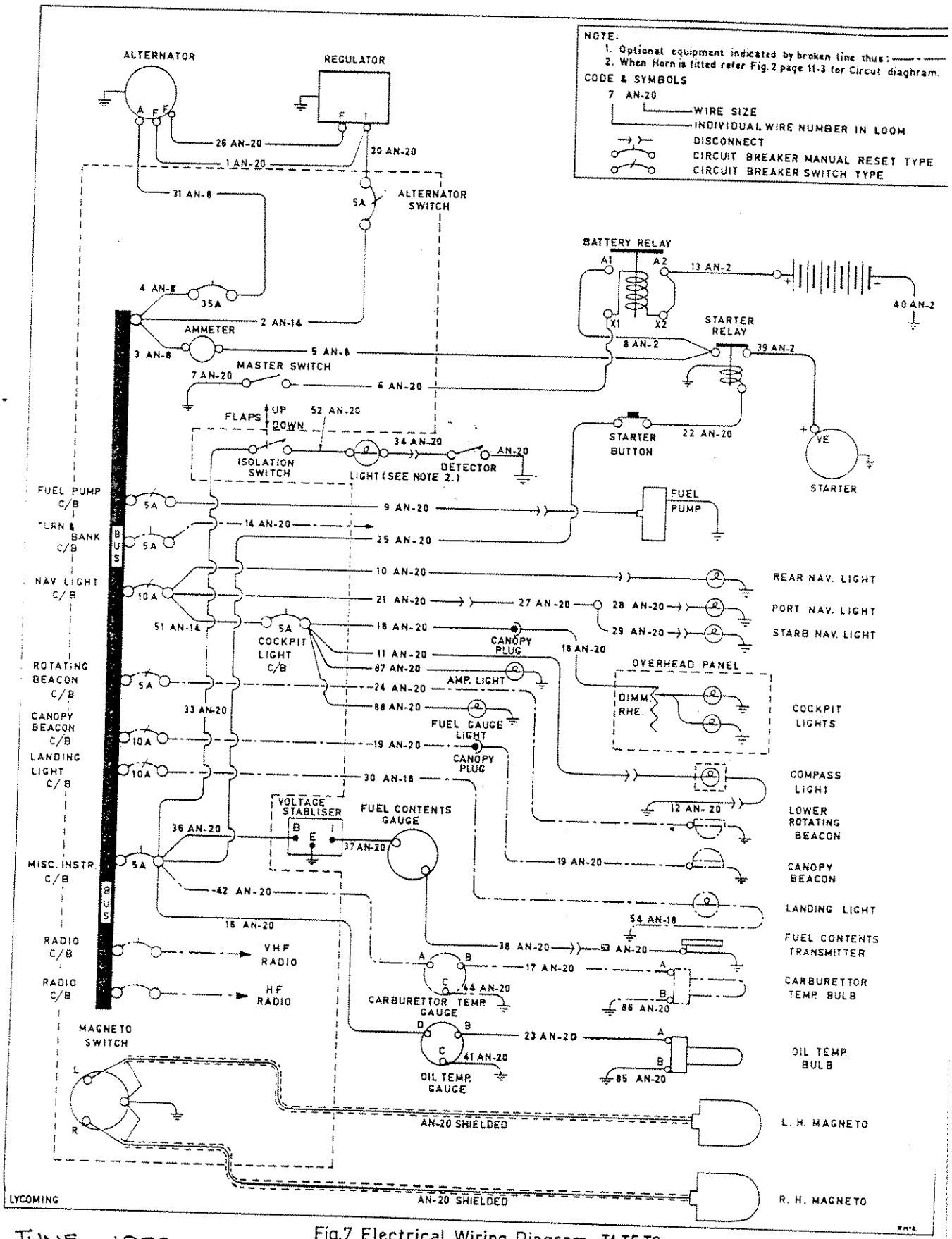

JUNE 1970

Fig.7 Electrical Wiring Diagram-T4,T5,T6

POWER PLANT GENERAL

A. GENERAL DESCRIPTION

The power plant consists of the engine, engine mount, cooling baffles and cowling. The engine fitted to the Airtourer T4 is a Lycoming O-320-E2A.* It is dynafocally mounted on a tubular steel engine mount, which is turn, is bolted to attachments on the fuselage. Cooling baffles fitted to the engine, direct cooling air over and around the baffles fitted to the engine, and over and around the cylinders, and oil cooler. A removable engine cowl is installed in two halves and is attached by means of DZUS fasteners. The exhaust system, consists of four pipes leading into a single muffler/heater unit with two extension tail pipes leading out through the engine cowl. Two outlet ports in the muffler/heater unit duct hot air to the carburettor, and cockpit.

* Airtourer T5, T6 - Lycoming O-320-E1A

B. ENGINE MOUNT

The engine mount is constructed of 45 ton steel tube with bushes welded at the end to suit the attachment bolts. The outer arms of the engine mount are bolted to blocks at the ends of the fuselage longerons, while the inboard arms terminate in bushes screwed to take in the inboard securing bolts.

The engine mount is designed to give the engine an offset of 4° to starboard. The thrust line is set at 0° to the aircraft horizontal datum.

Lord dynafocal engine mount units are fitted to the four mounting lugs on the engine to absorb vibration and the engine attaching bolts pass through these bushes to secure the engine to the mount.

C. COOLING BAFFLES

The cooling baffle arrangement on the T Series is made up of two side plates, two back plates, two front plates and four intercylinder baffles. A duct is fitted to the port back plate, to direct a flow of air to the oil cooler.

ENGINE CONTROLS

D. GENERAL

1. The engine controls include the throttle, mixture controls and carburettor heat control.

2. THROTTLE CONTROL

Throttle levers are mounted at the cockpit sides, convenient to each pilot's free hand.

Pulling the throttle knob rearwards closes the throttle.

Throttle control friction is obtained by means of a friction nut mounted on the port throttle.

3. MIXTURE CONTROL

Engine mixture is controlled by a push pull knob, located at the bottom of the instrument panel, and connected by means of a bowden cable to the engine.

Pulling the mixture control knob rearwards leans the mixture.

4. "PROPELLER CONTROL T5, T6

Propeller control levers are mounted adjacent to the throttle levers at the cockpit sides.

Pushing the levers forward fines the pitch and increases propeller R.P.M.

PROPELLER - AIRTOURER T4

1. The propeller fitted to the Airtourer T4 is a Sensenich 74DM6-S-1.5-60.

2. PROPELLER REMOVAL (Fig. 8)

   (a) Remove the screws (2) which secure the spinner (1) to the backplate (3) and withdraw spinner.

   (b) Remove lockwire from propeller retaining bolts (4).

   (c) Remove bolts (4) and withdraw propeller (5), frontplate (6), gasket (7), and backplate (3) from engine.

3. INSTALLING THE PROPELLER

   (a) Turn the engine until No. 1 piston is on top dead centre.

   (b) Fit backplate with the two "P" identification marks in the horizontal position.

   (c) Install propeller with gasket so that the two blades match up with the identification marks.

   (d) Fit the spinner frontplate.

   (e) Fit the six bolts and washer and torque hoad to 300-320 in. lbs.

   (f) Lock the heads of bolts with lockwire.

   (g) Refit the spinner.

PROPELLER - AIRTOURER T5, T6

4. The propeller fitted to the T5, T6 is a Hartzell HC-C2YL-1B constant speed propeller.

NOTE: Ensure that all switches are off during removal or installation of all propellers.

5. PROPELLER REMOVAL (Fig. 8)

(a) Remove the screws (2) which secure the spinner (1) to the front (3) and backplates (e) and withdraw spinner.

(b) Remove the screws (5) attaching the frontplate (3) to the propeller dome and remove frontplate.

(c) Remove lockwire from propeller retaining studs.

(d) Withdraw propeller (b) by undoing studs evenly, complete with nut and roll pins.

(e) Remove backplate.

6. INSTALLING THE PROPELLER

(a) Fit the backplate (4).

(b) Ensure that the four studs in the crankshaft flange mate up with the four counterbored holes in the propeller. Install propeller.

(c) Screw in the six studs evenly and torque load to 40 ft. lbs.

(d) Lock the nuts with lockwire.

(e) Install frontplate onto propeller dome.

(f) Refit spinner.

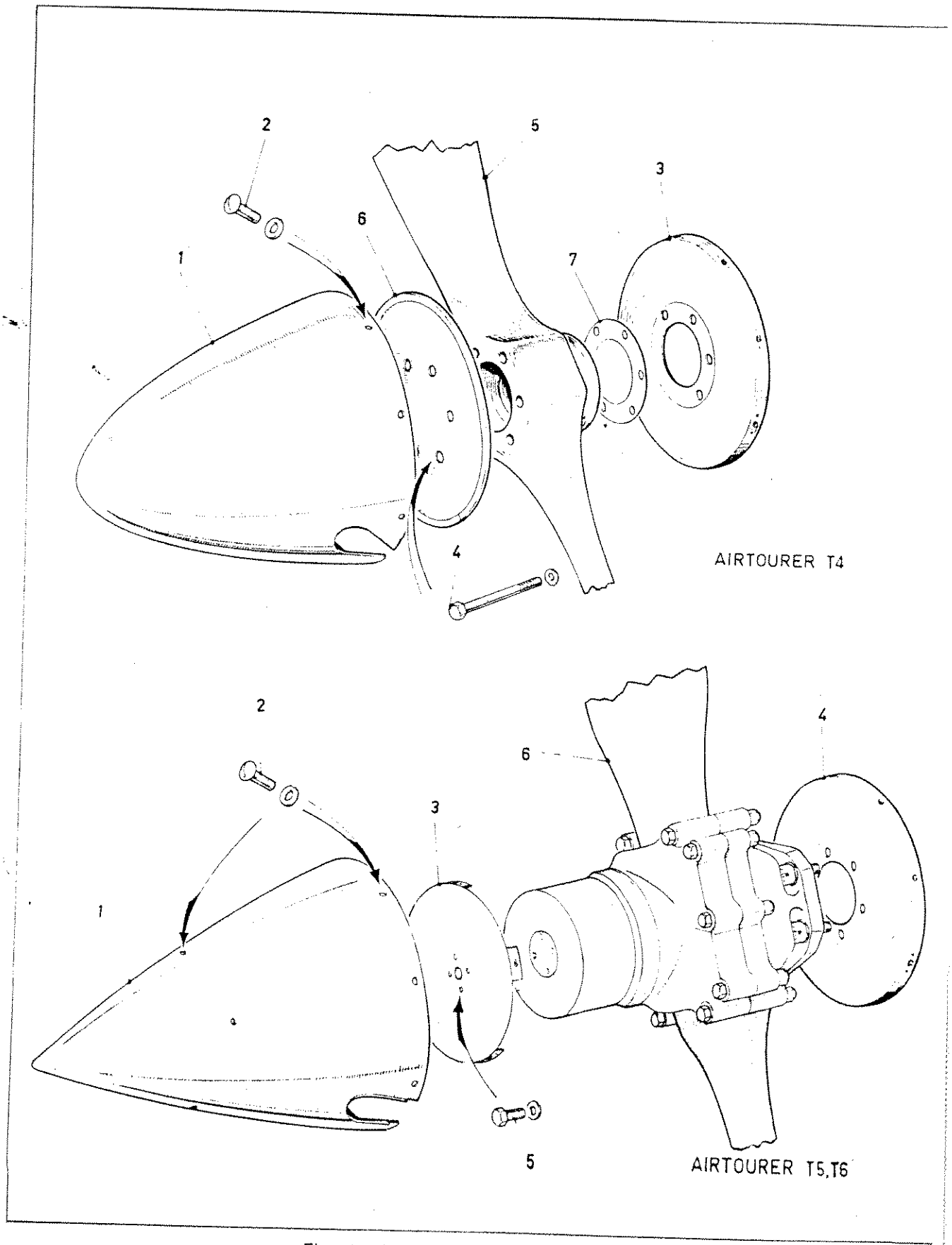

Fig. 8 Installation Spinner & Propeller

CHAPTER 5. ENGINE

GENERAL

This chapter contains general information for the Lycoming 0-320-E2A and EIA Engines.

ENGINE DATA-	AIRTOURER 150 H.P.
ENGINE	Lycoming00-320-E1A or Lycoming 0-320-E2A
B.H.P. rated max.	150 at 2700 R.P.M.
Displacement	319.8 cu. in.
Bore	5.125 inches
Stroke	3.875 inches
Compression ratio	7.00:1
Oil sump capacity	6.4 imp. qts.
Valve Mechanism	Hydraulic
VALVE TO ROCKER CLEARANCE: Hydraulic tappets collapsed	.020 IN - .080 IN
Oil Consumption average	1.08 imp. pint/hr
OIL PRESSURE lbs/sq. in.	
Normal operating	60 - 90
Minimum idling	25
OIL TEMPERATURE	
Minimum for take-off	104°F (40°C.)
Maximum	245°F (118°C)
Cylinder Head Temp. Max.	500°F (260°C)
CARBURETTOR	Marvel-Schebler MA-4SPA
MAGNETOS (2)	Bendix Scintilla S4LN-20 (RH) Bendix Scintilla S4LN-21 (LH)

ENGINE DATA (Cont'd)	AIRTOURER 150 H.P.
Firing Order Spark occurs - °B.T.C. Direction of Rotation	1, 3, 2, 4, 25 Clockwise
ALTERNATOR PRESTOLITE Voltage Rated Output Ø Alternator Drive + Direction of Rotation	ALE 8406 12 40 AMPS 1.91:1 Crankshaft speed Clockwise
STARTER Voltage Ø Starter drive + Direction of Rotation	PRESTOLITE Remy Mod MZ 4206 12 13.556:1 Crankshaft speed Anti-Clockwize
Starter Solenoid	PRESTOLITE SAW 4217
TACHOMETER DRIVE Type Ø Tachometer Drive + Direction of Rotation	 AS-54-1 Mechanical Drive 0-5:1 Crankshaft speed Clockwise
FUEL PUMP Fuel pump drive Direction of Rotation	 0.5:1 Crankshaft speed Plunger type (Reciprocating)
Spark Plug	Champion EM42E

Ignition - Lycoming O-320-E Engine

Magneto Timing -

Remove the top spark plug from the No. 1 cylinder. Place the thumb of one hand over the spark plug hole and rotate the crankshaft in direction of normal rotation until the compression stroke is reached. The compression stroke is indicated by a positive pressure inside the cylinder tending to lift the thumb off the spark plug hole. In this position both valves of No. 1 cylinder are closed.

Rotate the crankshaft opposite to its normal direction of rotation until it is approximately 35° before top centre of the compression stroke of No. 1 cylinder.

Align the timing mark on the front face of the ring gear support with the drilled hole in the starter, making sure the final motion of the ring gear is in direction of normal rotation. The ring gear must always be in this position when either magneto is locked in position.

NOTE: An alternate method is provided to perform the above method if so desired. Locate and fasten ignition timing pointer on the 25° mark located on the rear face of the starter ring gear. Align the pointer with the parting flange of the crankcase.

With the magneto gear assembled on the right magneto, turn the magneto gear until the chamfered tooth on the distributor gear inside the magneto aligns with the white pointer as seen through the window in the front of the magneto cover.

Without allowing the gear to turn from this position, assemble the magneto with gasket on the engine. Secure magneto in place with washers and nuts; tighten nuts only finger tight.

Fasten ground wire of electric timing light to any unpainted metallic portion of the engine, and one of the positive wires of the timing light to a suitable terminal connected to the ground terminal connection of the right magneto. Then turn the engine crankshaft several degrees from the 25° BTC in direction opposite to that of normal rotation.

Turn on the switch of the timing light. The light should be lit. Turn the crankshaft very slowly in direction of normal rotation until the timing mark on the front face of the ring gear support aligns with the drilled hole in the starter, at which point the light should dim (or go on, on battery operated models). If not, turn the magneto in its mounting flange slots and repeat the procedure until the light dims (or goes on, on battery operated models) at 25° before top dead centre. Tighten the two mounting nuts and replace magneto inspection plug.

Install magneto impulse coupling adapter with gasket on left magneto mounting pad of the accessory housing.

CAUTION

The impulse coupling magneto can be used only to the left side of the engine, when viewed from the rear, or accessory housing end.

Remove inspection plug and turn magneto drive coupling until the white bevelled tooth on the magneto gear aligns with the pointer.

Note -

In order to turn the shaft on the impulse coupling magneto, depress the pawl on the impulse coupling with the finger.

Place magneto gasket over mounting studs and secure left magneto in place with washers and nuts; tighten nuts only finger tight.

Connect the other positive wire of the timing light to a suitable terminal connected to the ground terminal connection of the left magneto and time the magneto in the same manner as described for the right magneto.

NOTE - The crankshaft should not be rotated more than 35° in direction opposite normal rotation, as the pawl on the impulse coupling will engage with the stop pin and late timing will be indicated through the impulse coupling mechanism. If this should happen, rotate engine in normal direction until sharp click is heard, which will indicate that impulse coupling has passed through firing position; then turn crankshaft in direction opposite normal rotation to approximately 35° before top centre and proceed with timing check.

After both magnetos have been timed, leave the timing light wire connected and re-check magneto timing as previously described to make sure that both magnetos are set to fire together. If timing is correct, both timing lights will dim (or go on, on battery operated models) simultaneously when the mark on the front face of the ring gear support aligns with the drilled hole in the starter. If the breaker points open too early, loosen the mounting nuts and rotate the magneto clockwise. If the breaker points open too late, rotate the magneto counterclockwise. Remove timing light and ignition timing pointer.

The .200 and .204 magnetos are timed as described for other magnetos. Never, however, attempt to time the retard breaker points to the engine. Always use the main breaker points for engine timing.

After magnetos have been properly timed, clean the breaker points to remove any trace of oil or dirt. Replace breaker cover and lock the retaining screws together with lockwire.

NOTE: Breaker points on Bendix Scintilla S4LN type magnetos are not to be adjusted to a given clearance. For proper S4LN magneto adjustments, refer to Scintilla's instructions.

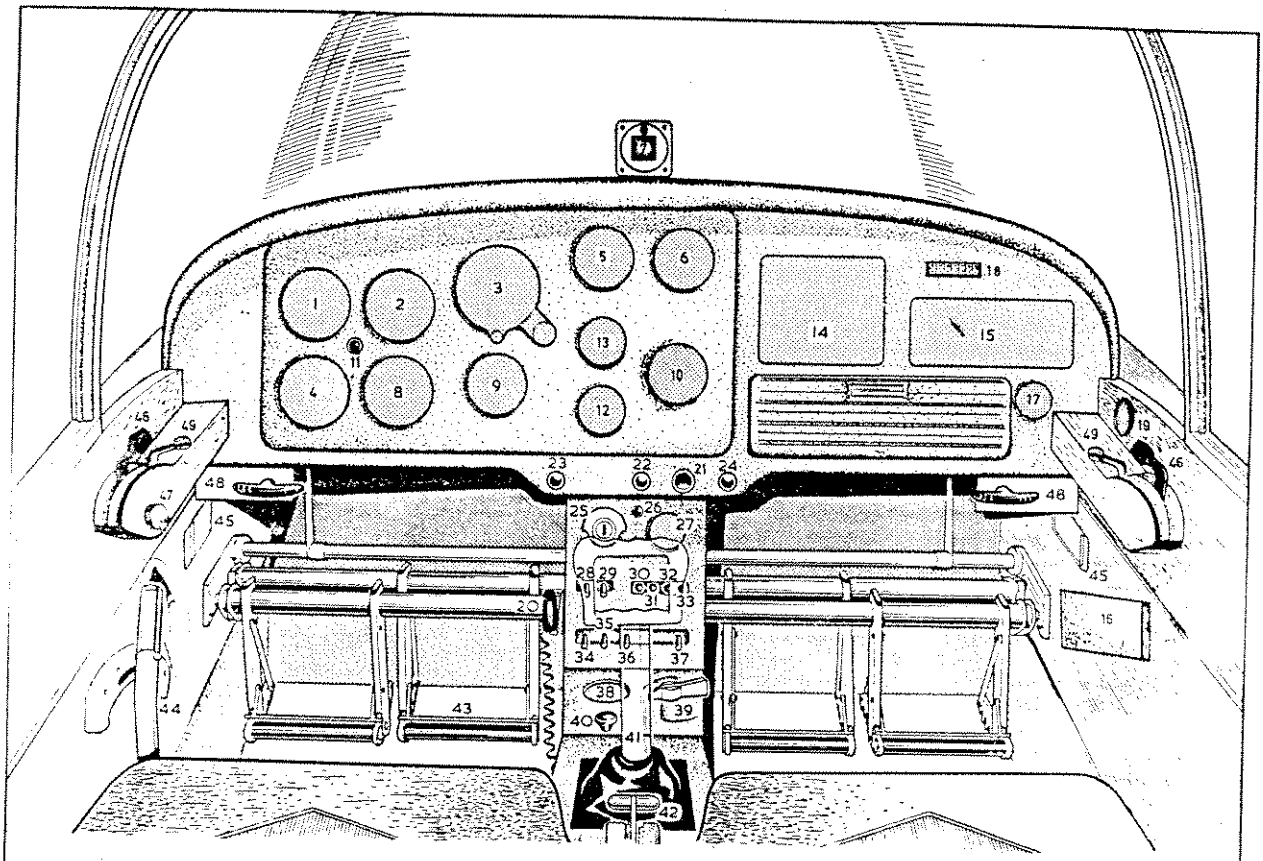

1. AIRSPEED INDICATOR
2. ALTIMETER
* 3. ARTIFICIAL HORIZON
* 4. VERTICAL SPEED INDICATOR
* 5. MANIFOLD PRESSURE GAUGE
6. TACHOMETER
7. COMPASS
8. TURN & BALANCE INDICATOR
* 9. DIRECTIONAL GYRO
10. TRIPLE GAUGE
* 11. STALL WARNING LIGHT
* 12. CYLINDER HEAD TEMP. GAUGE
* 13. CARBURETTOR TEMP. GAUGE
* 14. H.F. OR V.H.F. TRANSCEIVER
15. A.D.F. RADIO
16. MAP CASE
* 17. VACUUM GAUGE
18. COMPASS DEVIATION CARD
* 19. OUTSIDE AIR TEMP. GAUGE
20. MICROPHONE
21. STARTER
22. CABIN HEAT CONTROL
23. CARBURETTOR HEAT CONTROL
24. MIXTURE CONTROL
25. IGNITION SWITCH
26. GENERATOR WARNING LIGHT
* 27. AMMETER
28. MASTER SWITCH
29. GENERATOR FIELD SWITCH
30. GENERATOR OUTPUT CIRCUIT BREAKER
31. INSTRUMENTS CIRCUIT BREAKER
32. RADIO CIRCUIT BREAKER
33. COCKPIT LIGHTS CIRCUIT BREAKER
34. FUEL PUMP TRIP SWITCH
35. NAVIGATION LIGHT TRIP SWITCH
36. ROTATING BEACON TRIP SWITCH
37. LANDING LIGHT TRIP SWITCH
38. FUEL CONTENTS GAUGE
39. FUEL SELECTOR
40. PARKING BRAKE CONTROL KNOB
41. CONTROL COLUMN
42. ELEVATOR TRIM CONTROL
43. ADJUSTABLE RUDDER PEDALS
44. FLAP CONTROL
45. CABIN VENTILATORS
46. THROTTLE CONTROLS
47. FRICTION NUT
48. HAND BRAKE
49. C.S.U. CONTROLS

*OPTIONAL ITEMS: ITEMS 12 & 13 INTERCHANGEABLE WITH CLOCK

Fig. 9 Instrument Panel & Cockpit Layout.

LANDING GEAR T6. ONLY

For Diagramatic Breakdown see Fig. 6 in T6 Parts Supplement.

(1) GENERAL The main landing gear for the T6 consists of two tapered spring steel canti-lever legs, to each of which a secondary leaf spring is attached. Both main legs are clamped and bolted to a sub-assembly in the wing.

To each leg is bolted a 5" dia Dunlop wheel assembly, incorporating ahhydrolic disc brake. A hinged, moulded fibreglass fairing covers the attachment portion of each spring leg.

(2) MAIN LANDING GEAR REMOVAL

(a) Remove split-pin, nut and washer (18,19,20) from leaf spring lower clamp and withdraw $\frac{3}{8}$" bolt (17).

(b) Mount the aircraft on suitable trestles so that the undercarriage is clear of the ground (see chapter 2).

(c) Remove the six 8-32NF screws from the fairing and swing the fairing down.

(d) Disconnect the brake line and remove the lockwire from the landing gear retaining bolts.

(e) Undo the $\frac{1}{2}$" bolt (7) securing the inboard end of the leg.

(f) Loosen the four $\frac{1}{4}$" bolts and locknuts (12,13) on the top and bottom clamp plates (6).

(g) Undo the 7/16" bolts (10) securing the clamp plates, and after lifting the rubber seal from the leg, lower the leg to clear.

(h) Check the bolts for signs of stretching and cracking either of which is cause for rejection. Check the threads for damage.

(3) INSTALLATION OF MAIN LANDING GEAR

(a) Lift the landing gear leg (1) and leaf spring (2) into position and loosely fit the clamps (6) and spacer (4) in place using the two 7/16" bolts (10) with washers (11) under the bolt heads. Clamp-screws face forward.

(b) Fit the conical washer (8) onto the $\frac{1}{2}$" bolt (7)

ensuring that the conical face is against the leg. Fit the conical cup (9) and spacer (3) into position and install bolt but do not tighten.

(c) Push the leg and leaf spring hard back against the clamp plates.

(d) Tighten the four $\frac{1}{4}$" screws (12) in the upper and lower clamps and lock with lock nuts (13).

(e) Insert shims, Part No. 61027/2 or 61028/1 or 61029/1, between upper and lower clamps (6) and spacer (4) UNTIL NO BOW APPEARS IN LOWER CLAMP after bolts (10) have been tightened to 450 - 500 in. lbs. torque loading. Oil bolt shank before torque loading.

(f) Carefully tighten bolt (7) at inner attachment to torque loading of 540 - 600 in. lbs.

(g) Lockwire bolts. Attach the rubber seal to the leg with "Pliobond."

(h) Reconnect the brake line and bleed the system.

(i) Raise the fairing and secure it in position with six 8-32NF screws.

(j) Grease inner surfaces of leg and leaf spring with grease spec. MIL.G7711A.

(k) Remove the aircraft testles and secure the leaf spring clamp with the $\frac{3}{8}$ bolt, nut washer and split-pin (17,18,19,20).

50/121600

AIRTOURER T6/24

SUPPLEMENT:

As the Airtourer T6/24 differs from the T6 in the electrical and instrument installations only, this Supplement deals only with these differences. All other data will be found in the sections dealing with the 100, 115 and "T" Series and is common to all AESL AIRTOURER AIRCRAFT.

EQUIPMENT

The following equipment may be fitted and is included in the empty weight.

ITEM	Wt. lbs.	Arms Ins.	Moment lb. ins.
Bendix CNS 220 Transceiver	5.8	62	359.6
Artificial Horizon	2.8	64	179.2
Directional Gyro	2.6	64.5	167.7
A.S.I.	1.0	64.5	64.5
Altimeter	1.0	64.5	64.5
Rate of Climb Indicator	1.0	64.5	64.5
Turn and Bank Indicator	1.0	64.5	64.5
Clock	0.4	66.5	26.6
Carburettor Temp. & Bulb Adaptor	0.8	65.00	52.0
Cylinder Head Temp. Gauge) Thermocouple and Leads)	1.2	66.5	79.7
Fuel Pressure Gauge and Pipes	0.7	66.5	46.6
E.S.I.	0.6	64.0	38.4
Outside Temperature Gauge	0.1	69.00	6.9
Cable for Radio and Wiring	0.1	70.00	7.0
Ammeter	0.3	69.00	20.7
Elevator Trim Indicator	0.4	68.00	27.2
Flap Position Indicator	0.4	68.00	27.2
Rotating Beacon Upper	2.0	128.00	256.00
Dual Electric Flap Control	2.25	109.00	245.25
Landing Light	1.0	21.00	21.00
Dual R.P.M. Control	4.0	59.00	236.00
Dual Electric Elevator Trim	2.0	104.00	208.00

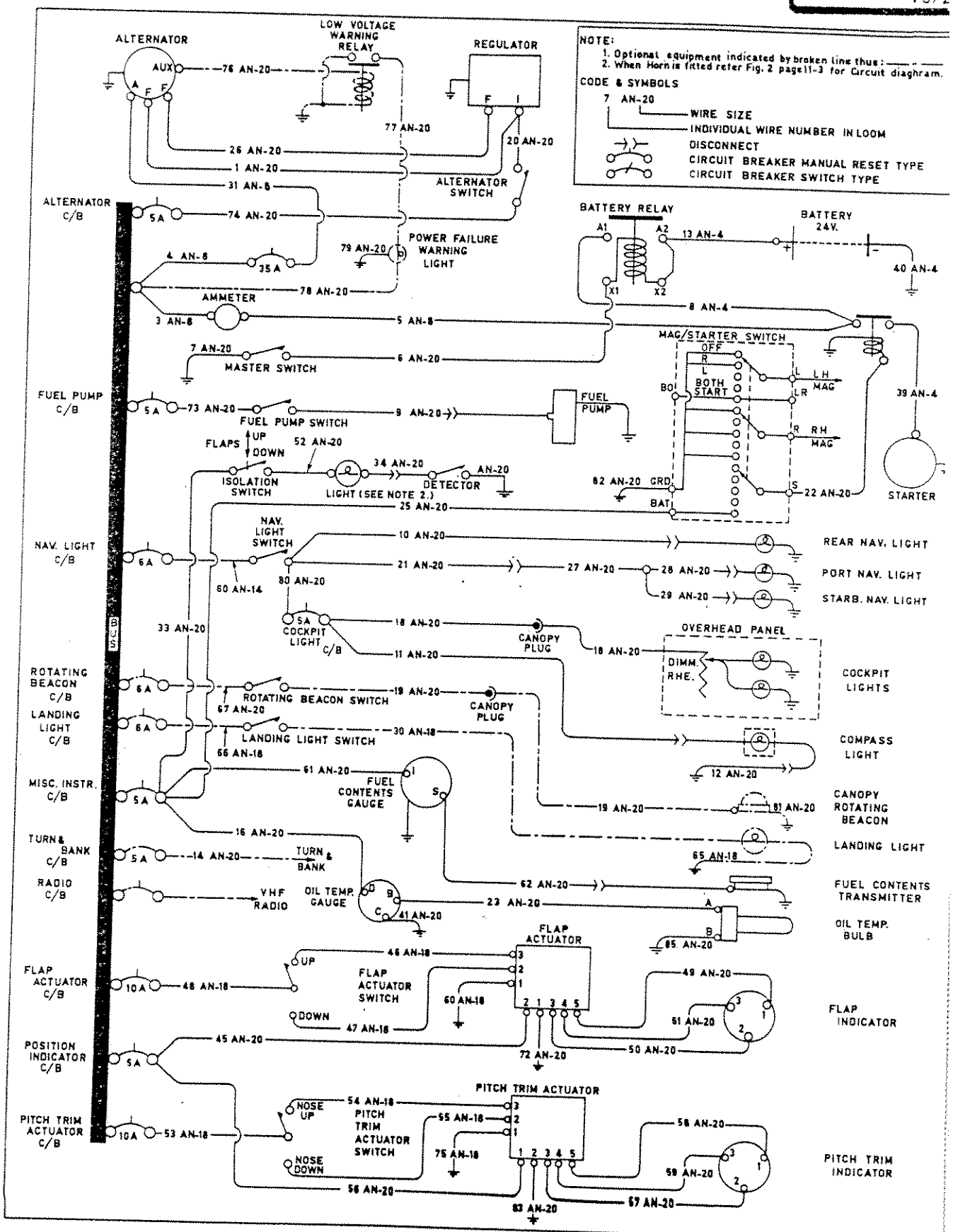

JUNE 1970

Fig. 1 Electrical Wiring Diagram - T6/24

ELECTRICAL SYSTEMS

ELECTRIC POWER SUPPLY SYSTEM

The electric power system is a 24 UDC single wire earth return system, consisting of a battery, alternator, voltage and current regulator, starter, solenoid switch, battery master relay, lights, ammeter and an electrical panel containing the circuit breakers and switches. All low tension wiring is installed in open looms suitably supported by straps and protected by plastic tubing where necessary.

BATTERY

A 24 volt nickel-cadmium battery of 13 ampere-hour capacity is installed within a battery box mounted in the rear fuselage. The battery is accessible by a hinged panel on the fuselage port side. The battery may be isolated from the rest of the electrical system by means of the battery relay controlled by the master switch on the electrical panel.

MAINTENANCE OF BATTERY

Refer "Sonotone" BATTERY MANUAL

BATTERY BOX

The battery is contained within a moulded fibreglass box mounted on the port side of the rear fuselage. The battery is held securely within a frame which runs on rails to facilitate maintenance of the battery. A drain tube extends from the bottom of the box and is routed through the bottom of the fuselage to provide an air outlet.

BATTERY MASTER RELAY

The battery master relay is mounted adjacent to the battery. It is a solenoid operated, bridge type contactor and is actuated by the master switch when ON.

MASTER SWITCH

The master switch is located on the right hand side of the left hand electrical panel. When in the OFF position the battery and master relay is isolated from the bus.

PATHFOURE
T6/2

ALTERNATOR

The alternator, prestolite ALT 8404 with a rated output of 50 amps at 28 volts, is located on the right front side of the engine, belt driven by a pulley wheel concentric to and integral with the starter ring gear.

VOLTAGE REGULATOR

The voltage regulator is a prestolite VSF-7400 solid state and is installed on the right hand front face of the firewall. This regulator controls voltage from 26.00v to 30.00v and is adjusted to 28.4 volts when controlling a 10 to 15 amp load after one minute of operation.

ALTERNATOR FIELD SWITCH

This switch is located alongside the master switch on the electrical panel. Turning the alternator switch off removes de-excitation from the regulator, thus stopping the alternator output.

ALTERNATOR ISOLATING CIRCUIT BREAKER

The "press to reset" alternator isolating circuit breaker is situated on the electrical panel. This protects the alternator power system from a short circuit in the battery power system and vice versa.

AMMETER

A centre reading 50-0-50 amp ammeter is situated at the top of the centre sub-panel and connected in series with the main bus bar line to the battery isolating relay. The ammeter indicates alternator output to the battery and also battery discharge current when the alternator is off line.

AIRCRAFT LIGHTING SYSTEM

The aircraft lighting equipment consists of navigation lights and cockpit lights. A landing light and rotating beacon may be fitted as optional equipment.

COCKPIT LIGHTS

Two rheostat controlled red cockpit lights are fitted to the overhead panel on the canopy. Each light is individually adjustable for position and for size of light from spot to flood. The Bakelite hood is removable to facilitate replacement of lamp. The cockpit lights are only operable with the navigation lights switched on.

STALL WARNING

An audible stall warning circuit is embodied in the aircraft electrical system, consisting of a lift detector switch, built into the leading edge of the port wing and wired to a warning horn, located under the luggage compartment floor. Adjacent to the horn is a micro switch controlled by the flap lever push rod. With the flaps down, as for landing, the push rod is moved forward allowing the switch to close. When stalling is imminent, air flow conditions actuate the lift detector switch, thus sounding the horn. When the flaps are raised, the push rod moves backwards, depressing the switch and isolating the horn.

NOTE:

A warning light may be fitted in lieu of the horn, depending on local Civil Aviations requirements.

STARTER

The starter is a "Prestolite" model MHB4001 24 volt with a 13.556:1 reduction from the crankshaft speed and is located at the left front side of the engine.

OPTIONAL EQUIPMENT (cont'd)

ITEM	Wt. lbs.	Arms Ins.	Moment lb. ins.
Cable for radio and wiring	0.1	70.0	7.0
Ammeter	0.3	69.00	20.7
Rotating beacon (lower)	2.1	143	300
Rotating beacon (upper)	2.0	128	256
Landing Light	1.0	21	21

C.G. AND WEIGHT LIMITS

	T4, T5	T6
WEIGHT Maximum aerobatic weight	1650 lbs	1800 lbs.
Maximum normal category weight	1750 lbs.	1900 lbs.

C.G. LIMITS

FORWARD LIMIT T4, T5
81.5" aft of aircraft datum at 1750 lbs.
79.2" aft of aircraft datum at 1400 lbs or less, with linear variations between 1350 lbs. and 1750 lbs.

AFT LIMIT T4, T5

Normal Category
86.0" aft of aircraft datum at all weights

Aerobatic Category
86.0" aft of aircraft datum at all weights

DATUM is a point 50" forward of the vertical face of the Firewall

FORWARD LIMIT T6
81.0" aft of aircraft datum at 1450 lbs or less.
84.0" aft of aircraft datum at 1800 lbs to 1900 lbs, with linear variations between 1450 lbs. and 1800 lbs.

AFT LIMIT T6

Normal Category
86.0" aft of aircraft datum at all weights

Aerobatic Category
86.1" aft of aircraft datum at all weights

DATUM is a point 50" forward of the vertical face of the Firewall

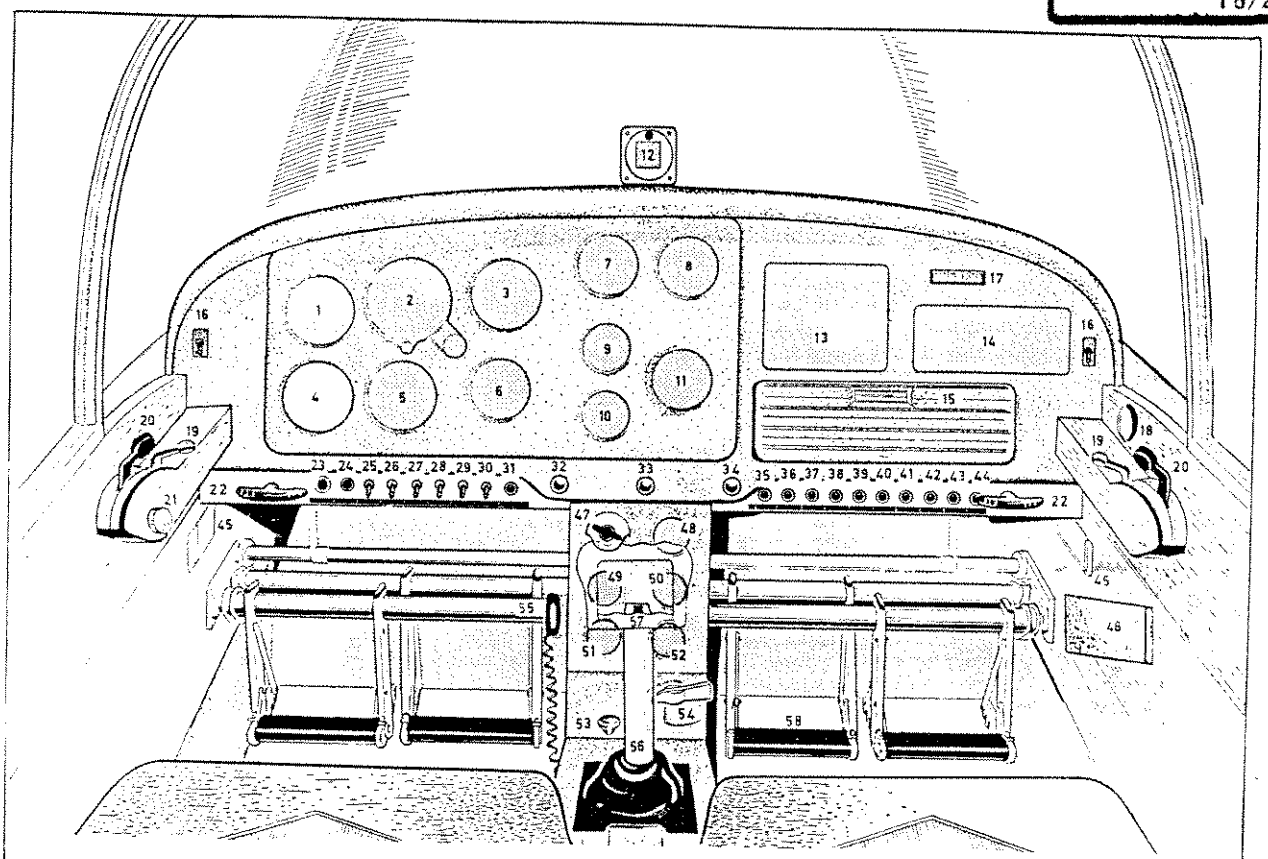

1 ALTIMETER
2 ARTIFICIAL HORIZION
3 AIRSPEED INDICATOR
4 RATE OF CLIMB INDICATOR
5 DIRECTIONAL GYRO
6 TURN & BANK INDICATOR
7 MANIFOLD PRESSURE GAUGE
8 TACHOMETER
9 CYLINDER HEAD TEMPERATURE GAUGE
10 CLOCK
11 TRIPPLE GAUGE
12 COMPASS
13 TRANSCEIVER
14 A.D.F. RADIO
15 GLOVE BOX
16 FLAP POSITION SWITCH
17 COMPASS DEVIATION CARD
18 OUTSIDE AIR TEMPERATURE GAUGE
19 C.S UNIT CONTROLS
20 THROTTLE CONTROLS
21 FRICTION KNOB
22 HAND BRAKE
23 LOW VOLTAGE WARNING LIGHT
24 RADIO CIRCUIT BREAKER
25 LANDING LIGHT SWITCH
26 ROTATING BEACON SWITCH
27 NAVIGATION LIGHT SWITCH
28 FUEL PUMP SWITCH
29 ALTERNATOR FIELD SWITCH
30 MASTER SWITCH
31 ALTERNATOR CIRCUIT BREAKER
32 CABURETTOR HEAT CONTROL
33 CABIN HEAT CONTROL
34 MIXTURE CONTROL
35 ALTERNATOR FIELD CIRCUIT BREAKER
36 FUEL PUMP CIRCUIT BREAKER
37 NAVIGATION LIGHT CIRCUIT BREAKER
38 ROTATING BEACON CIRCUIT BREAKER
39 LANDING LIGHT CIRCUIT BREAKER
40 COCKPIT LIGHTS CIRCUIT BREAKER
41 INSTRUMENTS CIRCUIT BREAKER
42 INSTRUMENTS CIRCUIT BREAKER
43 FLAP ACTUATOR CIRCUIT BREAKER
44 TRIM ACTUATOR CIRCUIT BREAKER
45 CABIN VENTILATORS
46 MAP CASE
47 IGNITION SWITCH
48 AMMETER
49 TRIM INDICATOR
50 FLAP INDICATOR
51 VACUUM GAUGE
52 FUEL CONTENTS GUAGE
53 PARKING BRAKE CONTROL
54 FUEL SELECTOR
55 MICOPHONE
56 CONTROL COLUMN
57 TRIM POSITION SWITCH
58 NON SLIP RUDDER PEDALS

Fig. 2 Instrument & Cockpit Layout.

AVIONICS

The avionics system consists of Bendix R.T. 221 VHF transceiver with a frequency range from 117.00 MH_z to 135.95 MH_z or Narco Mk VHF/VOR communications system, situated on the instrument panel on the starboard side forward of the structure.

POWER SUPPLY

The main power (28 volt DC) is supplied from a 10 amp circuit breaker on the electrical panel to the unit.

SWITCHING

A combined on/off volume control is mounted on the VHF unit.

Two jack plugs are fitted between pilots' seats for head set and microphone connection.

ANTENNA

17" whip type antenna is mounted on the port side of the rear fuselage midway between the canopy and vertical fin.

LANDING GEAR T6 ONLY

For Diagramatic Breakdown see Fig. 6 in T6 Parts Supplement.

(1) GENERAL The main landing gear for the T6 consists of two tapered spring steel canti-lever legs, to each of which a secondary leaf spring is attached. Both main legs are clamped and bolted to a sub-assembly in the wing.

To each leg is bolted a 5" dia Dunlop wheel assembly, incorporating ahhydrolic disc brake. A hinged, moulded fibreglass fairing covers the attachment portion of each spring leg.

(2) MAIN LANDING GEAR REMOVAL

(a) Remove split-pin, nut and washer (18,19,20) from leaf spring lower clamp and withdraw $\frac{3}{8}$" bolt (17).

(b) Mount the aircraft on suitable trestles so that the undercarriage is clear of the ground (see chapter 2).

(c) Remove the six 8-32NF screws from the fairing and swing the fairing down.

(d) Disconnect the brake line and remove the lockwire from the landing gear retaining bolts.

(e) Undo the $\frac{1}{2}$" bolt (7) securing the inboard end of the leg.

(f) Loosen the four $\frac{1}{4}$" bolts and locknuts (12,13) on the top and bottom clamp plates (6).

(g) Undo the 7/16" bolts (10) securing the clamp plates, and after lifting the rubber seal from the leg, lower the leg to clear.

(h) Check the bolts for signs of stretching and cracking either of which is cause for rejection. Check the threads for damage.

(3) INSTALLATION OF MAIN LANDING GEAR

(a) Lift the landing gear leg (1) and leaf spring (2) into position and loosely fit the clamps (6) and spacer (4) in place using the two 7/16" bolts (10) with washers (11) under the bolt heads. Clamp-screws face forward.

(b) Fit the conical washer (8) onto the $\frac{1}{2}$" bolt (7)

ensuring that the conical face is against the leg. Fit the conical cup (9) and spacer (3) into position and install bolt but do not tighten.

(c) Push the leg and leaf spring hard back against the clamp plates.

(d) Tighten the four $\frac{1}{4}$" screws (12) in the upper and lower clamps and lock with lock nuts (13).

(e) Insert shims, Part No. 61027/2 or 61028/1 or 61029/1, between upper and lower clamps (6) and spacer (4) UNTIL NO BOW APPEARS IN LOWER CLAMP after bolts (10) have been tightened to 450 - 500 in. lbs. torque loading. Oil bolt shank before torque loading.

(f) Carefully tighten bolt (7) at inner attachment to torque loading of 540 - 600 in. lbs.

(g) Lockwire bolts. Attach the rubber seal to the leg with "Pliobond."

(h) Reconnect the brake line and bleed the system.

(i) Raise the fairing and secure it in position with six 8-32NF screws.

(j) Grease inner surfaces of leg and leaf spring with grease spec. MIL.G7711A.

(k) Remove the aircraft testles and secure the leaf spring clamp with the $\frac{3}{8}$ bolt, nut washer and split-pin (17,18,19,20).