VICTA

DATE:

SERVICE BULLETIN NO. 43

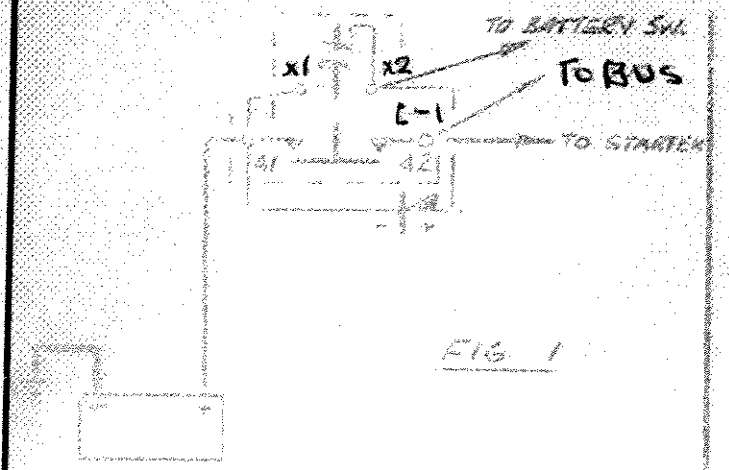

FIG 1

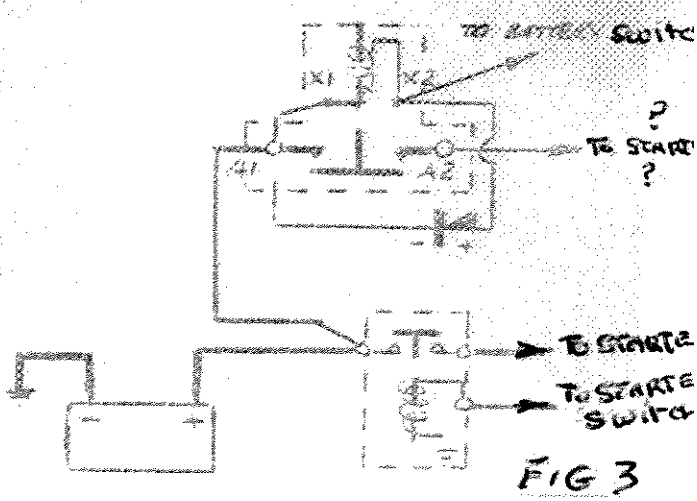

FIG 3

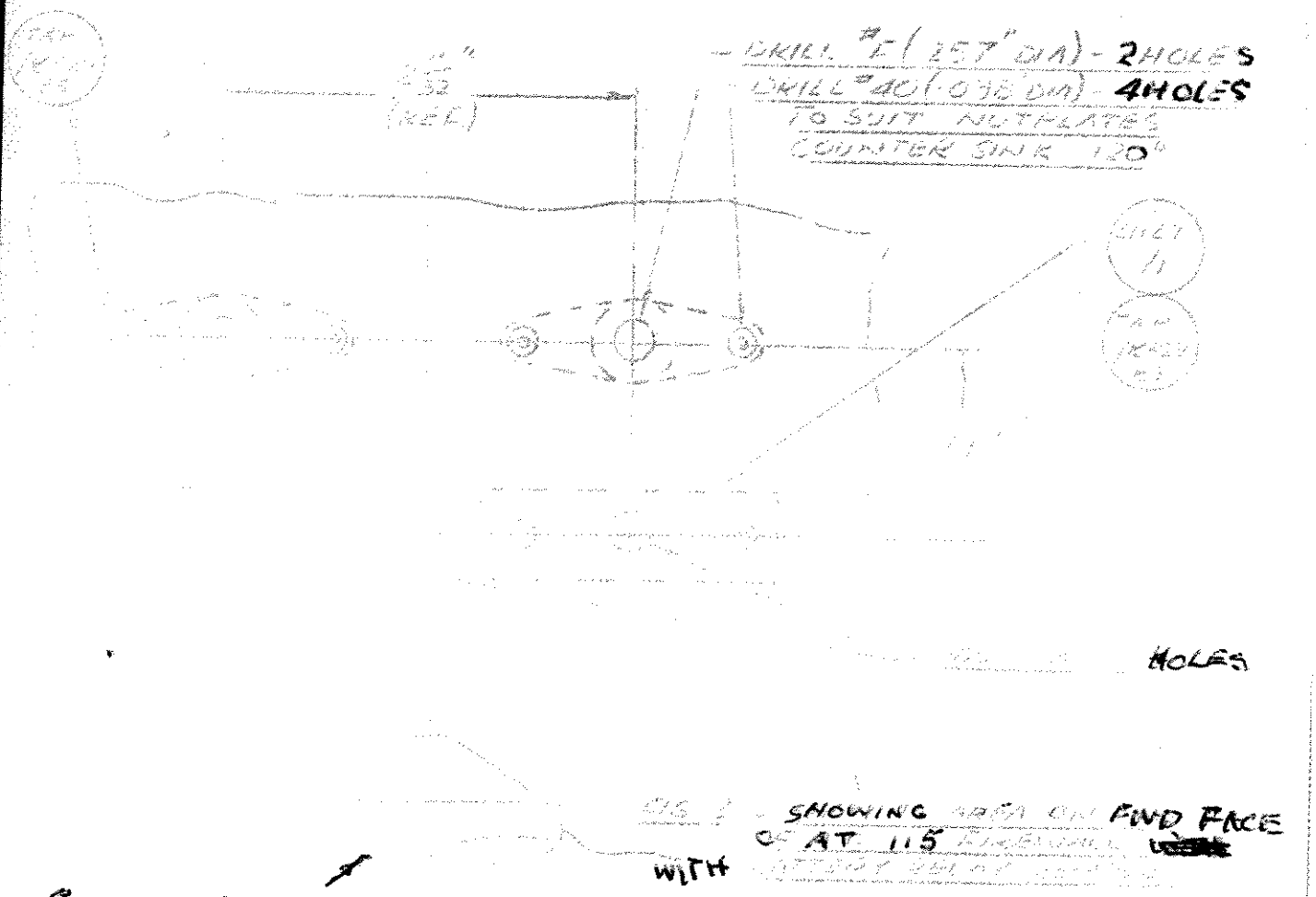

STARTER RELAY

AVIATION DIVISION

HORSLEY ROAD, MILPERRA, N.S.W., AUSTRALIA.

VICTA

DATE:

SERVICE BULLETIN NO. 43

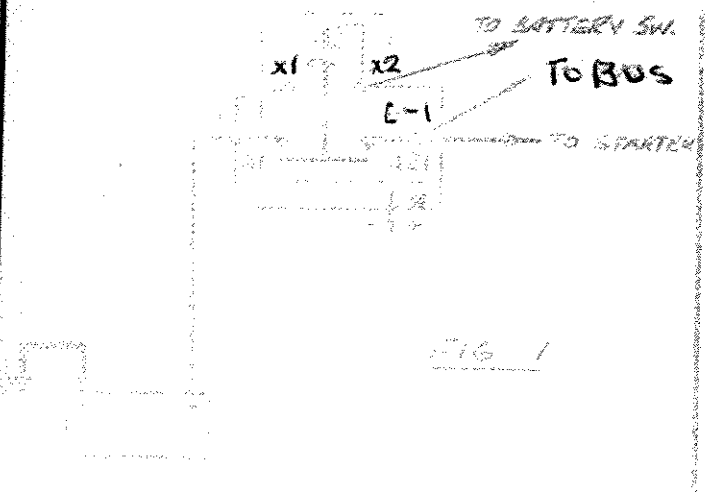

FIG 1

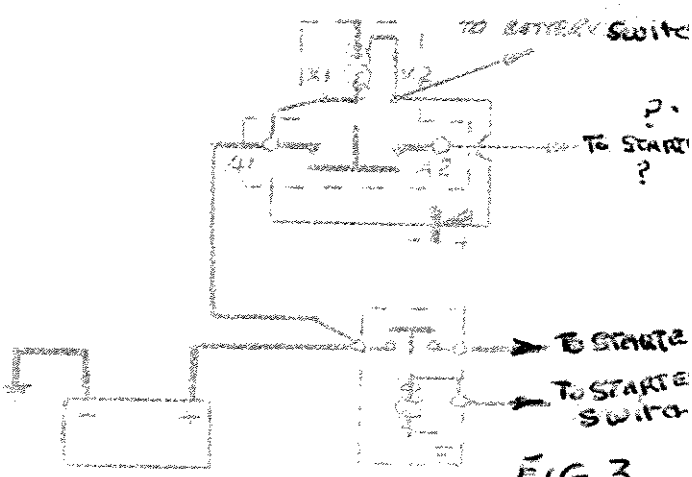

FIG 3

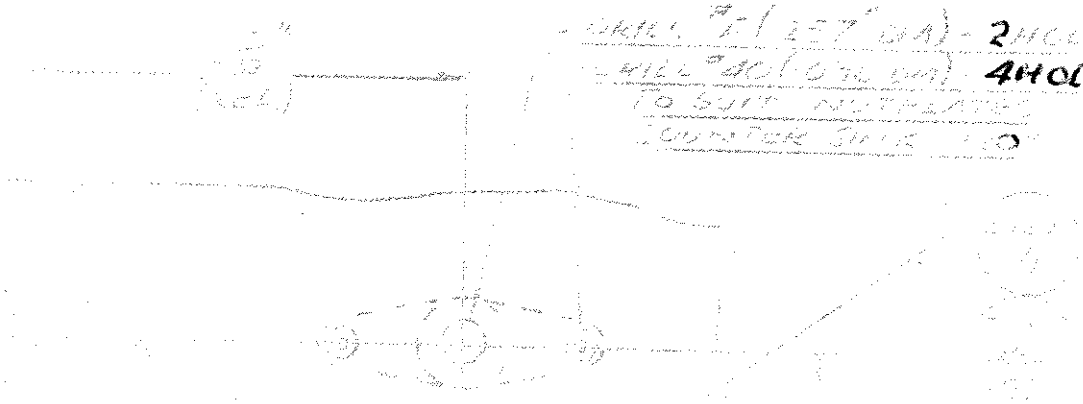

HOLES

SHOWING
AT 115
WITH
FWD FACE

STARTER RELAY

AVIATION DIVISION

HORSLEY ROAD, MILPERRA, N.S.W., AUSTRALIA.

VICTA

SERVICE BULLETIN

AVIATION DIVISION HORSLEY ROAD MILPERRA N.S.W. AUSTRALIA 77-0122

Date: 25th May, 1966.

No. 61
D.C.A. APPROVED

SUBJECT: Auxiliary Trim Bungee

PURPOSE: To lighten trim loads

REASON: The Airtourer 115 trim lever has been heavy to adjust to the full nose up postion. Several cases have been reported of the trim becoming disengaged due to the heavy load and moving to the nose down position.

EQUIPMENT AFFECTED: All Airtourer 115 aircraft.

COMPLIANCE: At owners discretion.

DETAILS:

(1) Remove luggage bay floor

(2) Drill No. 11 through rear member as shown on page 3 and install eyebolt Part No. AN 42-4.

(3) Disconnect forward end of nose-down spring and install shackle Part No. 02-52589/1 using AN960-416 washers as spacers inside shackle.

(4) Re-connect spring and install auxiliary bungee. Part No. 02-52590/1.

W A R N I N G

Following adjustment or replacement of any part of the flying control system, two independent inspections of the portion affected must be carried out prior to flight. The two inspections must be carried out independently by different persons licensed in the airframe category.

SERVICE BULLETIN No. 61

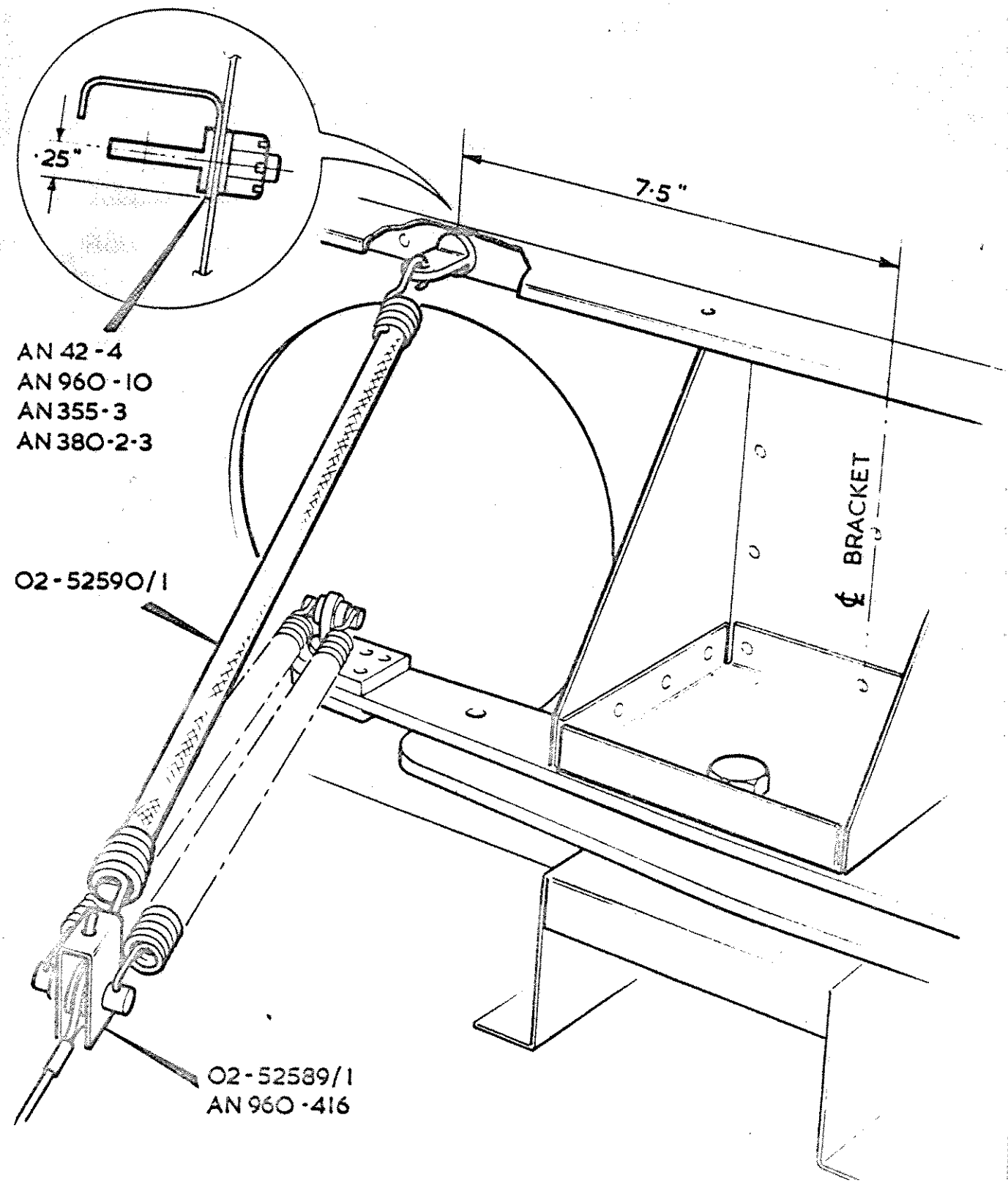

SERVICE BULLETIN No. 61

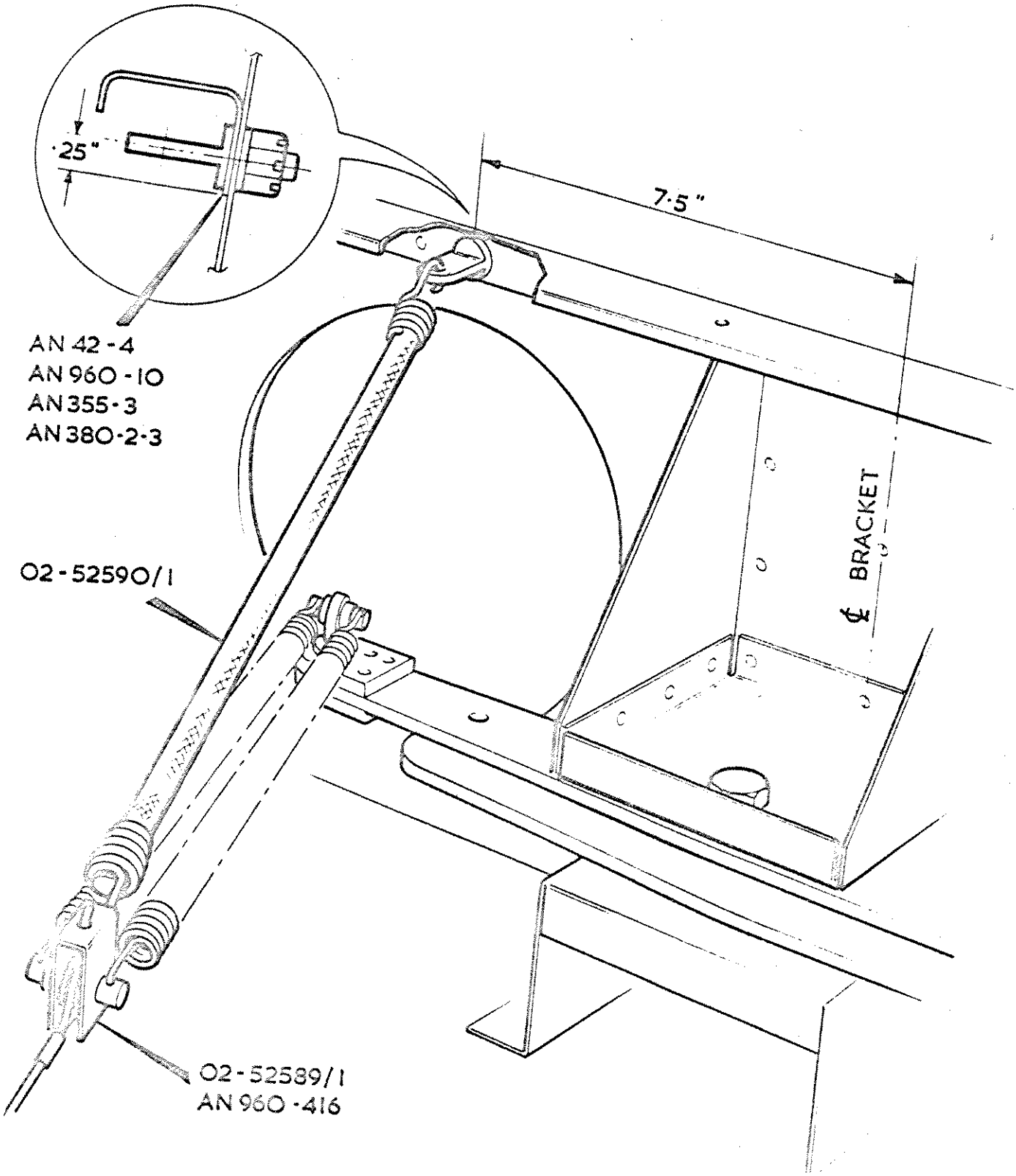

PARTS REQUIRED: Mod. Kit 61/1 consisting of:-

Part No.	Description	No. Off
02-52590/1	Auxiliary Bungee	1
02-52589/1	Shackle	1
AN42-4	Eyebolt	1
AN355-3	Nut	1
AN960-10	Washer, No. 10	1
AN960-416	Washer ¼" I.D.	2

PARTS REMOVED: Nil

DRAWINGS REQUIRED: Nil

SPECIAL TOOLS REQUIRED: Nil

EFFECT ON WEIGHT & C.G. Negligible

PUBLICATIONS AFFECTED: Nil

DISTRIBUTION: 2 c(ii)

VICTA

SERVICE BULLETIN

AVIATION DIVISION HORSLEY ROAD, MILPERRA, N.S.W., AUSTRALIA. 77-0122

Date: 11th August, 1966.

No. 64
Issue 1
D.C.A. APPROVED

SUBJECT: Walkway attachment (Mod. B272)

PURPOSE: To provide improved attachment at leading edge.

REASON: A forced landing involving considerable damage to the aircraft resulted from control difficulties arising when walkway material peeled back and flapped in the slipstream.

EQUIPMENT AFFECTED: All Airtourer 100 and 115 aircraft.

COMPLIANCE: Within next 25 hours flight time, or as directed by Airworthiness Authorities.

DETAILS:

1. Cut back leading edge of walkway material, parallel to leading edge and 3/8" back from it. Care must be taken to avoid scratching or scoring wing skin when cutting walkway.

2. Install cover strip along leading edge of walkway material. Rivet using TAP/D324 rivets at approximately 1" pitch. Maintain .3" edge distance to front edge. If strip fouls rib rivet, clear strip locally or replace rivet with counter-sunk head rivet.

PARTS REQUIRED: Mod Kit 64/1

Part No.	Description	No. Off
02-10067/1	Strip	2

PARTS REMOVED: Nil

DRAWINGS REQUIRED: Nil

SPECIAL TOOLS REQUIRED: Nil

EFFECT ON WEIGHT & C.G.: Nil

PUBLICATIONS AFFECTED: Nil

ONLY a requirement when a Fabric NON SLIP material walkway used.