PARTS REMOVED

8 self locking nuts - AN 365-428
2 bushes - 52419
8 rivets

SPECIAL TOOLS REQUIRED

Nil.

EFFECT ON WEIGHT AND C.G.

Nil.

PUBLICATIONS AFFECTED

Nil.

VICTA AVIATION DIVISION

SERVICE BULLETIN No. 4

DATE: 18th November 1962.

SUBJECT Rudder pedals bearing blocks. Mod. No. B4.

PURPOSE To prevent failure of bearing blocks.

REASON Failure of the rivets in the structure of the bearing blocks has occurred due to excess load being applied in a downward direction on the rudder pedals, thus allowing the rear rudder pedals torque tube to pivot on the forward torque tube bearing.

EQUIPMENT AFFECTED Airtourer 100.

COMPLIANCE Immediately.

DETAILS Rectification of the above failure can be achieved by replacing the existing rivets with larger diameter rivets and the existing rear bearing with a longer bearing. Refer to details listed below:

(a) Remove suction manifold from top of central keel member.

(b) Disconnect fork end of master cylinder plunger from torque tube assembly.

(c) Disconnect brake pull rod assembly from brake torque tube levers.

(d) Disconnect brake torque tube return spring.

(e) Disconnect nose undercarriage steering rod from rudder pedal hanger.

(f) Disconnect rudder operating push rod from rudder pedal lever between keel member panels.

(g) Remove the four self locking nuts and washers securing each bearing block to the inner sides of the fuselage, discard the nuts and withdraw the clevis bolts from the outer sides of the fuselage, thereby freeing the rudder pedal assembly from the fuselage structure.
NOTE: It is only necessary to partially withdraw the clevis bolts. However, if they are fully withdrawn care must be taken to ensure that the tubular spacers between the channel structure remain in position.

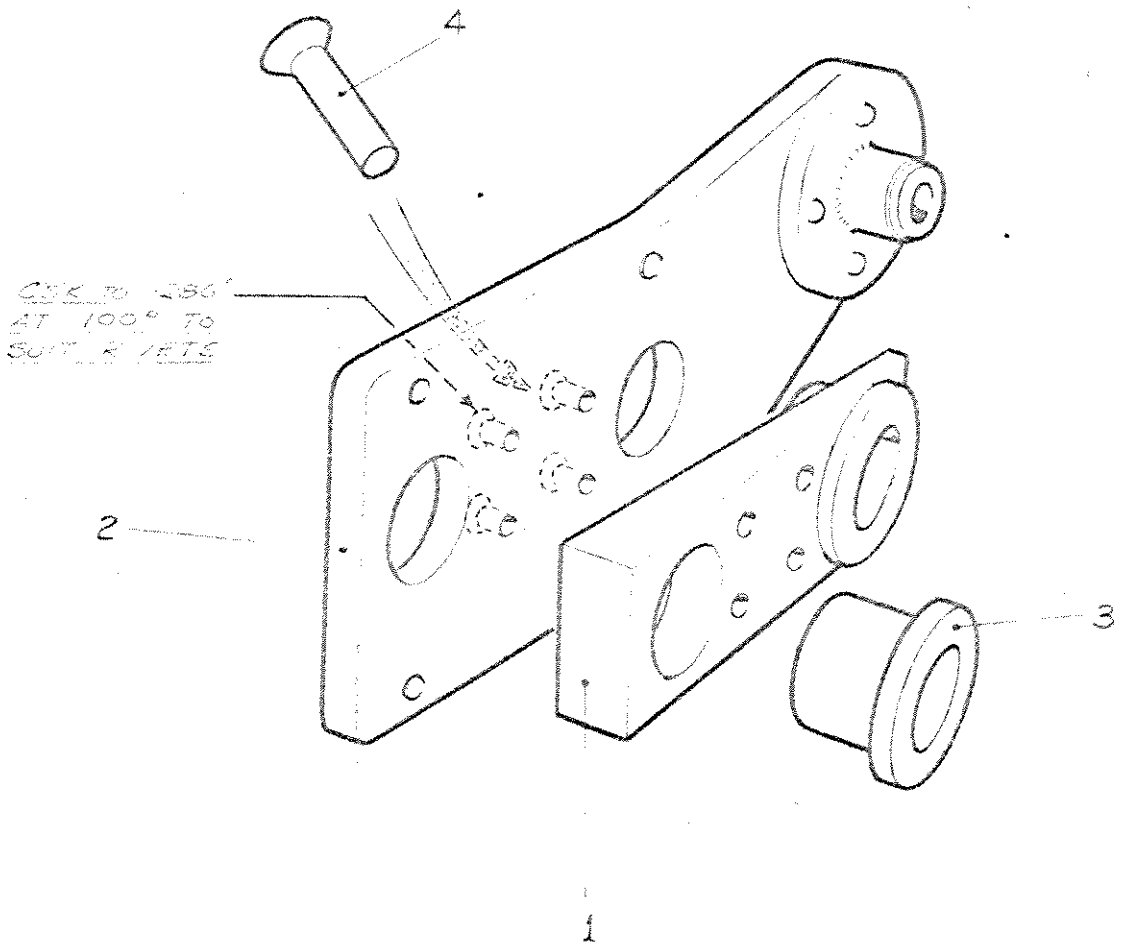

Fig. 1 Bearing Block

VICTA AVIATION DIVISION

SERVICE BULLETIN No. 5

DATE: 21st December 1962.

SUBJECT Lockwiring of bolts on tailplane and elevator. Mod. No. B5.

PURPOSE To give improved locking condition to bolts attaching fuselage pick-up brackets and centre hinge bracket to tailplane, and horn control assembly to elevators.

REASON Loosening of the above bolts has occurred under normal conditions.

EQUIPMENT AFFECTED Airtourer 100 & 115.

COMPLIANCE Next 100 hourly inspection.

DETAILS To prevent bolts loosening, drill heads of bolts with 1/16" drill and lockwire in pairs.

PARTS REQUIRED

Nil

PARTS REMOVED

Nil

SPECIAL TOOLS REQUIRED

Nil

EFFECT ON WEIGHT AND C.G.

Nil

PUBLICATIONS AFFECTED

Nil.

VICTA

DATE: 11.2.63.

SERVICE BULLETIN NO. 6

SUBJECT Locking and adjustment of control column torque tube bearing spigots. Mod. No. B6.

PURPOSE To give positive locking and tightening of spigots.

REASON Loosening of bearing spigots has occurred in service due to inadequate locking.

EQUIPMENT AFFECTED Airtourer 100 and 115.

COMPLIANCE Next 100 hourly inspection.

DETAILS Rectification of the above failure can be achieved in the following manner:-

(a) Remove front and side "Sarmilon" panels from the centre arm rest. (Refer Chapter 12 para. 8 of maintenance manual).

(b) Remove the four screws securing the fuel system panel and lift panel clear of keel member.

(c) Remove lockwire from forward spigot bearing and discard.

(d) Withdraw forward spigot bearing and discard.

(e) Fit new extended spigot bearing Pt. No. 31734/1 in place of the discarded one, and tighten up hard before wire locking to the outside face of the torque box. (It may be necessary to slacken off the rear spigot bearing before it is possible to tighten front one).

(f) Remove lockwire from rear spigot bearing and discard.

(g) Withdraw spigot bearing and fit .016" washers under head, sufficient to give minimum end play on control torque tube.

(h) Tighten spigot hard on to washers and wire lock in position.

(j) Replace fuel panel, armrest front panel and armrest side panels.

(k) Inspect control column for correct movement and operation.

NOTE: Following adjustments, overhaul, repair or replacement of any part of the control system, two independent inspections of the portion affected must be carried out and recorded prior to flight. The two inspections must be carried out independently by two persons licensed in the airframe category.

PARTS REQUIRED Mod. Kit No. B6/1 consisting of the following:-

Part No.	Description	No. Off
31734/1	Extended spigot bearing	1
AN960-PD516L	Plain thin washer .016" thick	6

PARTS REMOVED

Part No.	Description	No. Off
31724/1	Spigot bearing	1

SPECIAL TOOLS REQUIRED Nil

EFFECT ON WEIGHT AND C.G. Nil

PUBLICATIONS AFFECTED Nil

VICEM

DATE: 12.2.63

SERVICE BULLETIN NO. 7

SUBJECT Replacement of Friction Lock and Pivot on port throttle control, and Pivot Block on starboard throttle control. Mod. No. B7.

PURPOSE To avoid possible cutting in on the throttle control rods by the Friction Lock and the Pivot Block.

REASON Cutting in on throttle control rods has occurred in service.

EQUIPMENT AFFECTED Airtourer 100 and 115.

COMPLIANCE Next 100 hourly inspection.

DETAILS Rectification of the above fault has been achieved by changing the material specification of the Friction Lock and the Pivot Block from Steel (D.T.D. 160) to Commercial Brass.

Detailed below is method of removing and replacing Friction Lock and Pivot Block.

(a) Slacken check nut at fork end of port throttle control rod.

(b) Firmly gripping control rod knob undo the threaded end of control rod from the fork end.

(c) Remove the check nut.

(d) Pull throttle control rod rearwards until fully withdrawn from instrument panel mounting.

(e) Remove circlip from end of friction lock.

(f) Remove throttle friction knob from friction lock.

(g) Remove one of the rivets from one of the two brackets supporting the pivot of the friction lock, thereby allowing the bracket to twist and the friction lock to fall clear.

(h) Discard the steel friction lock and replace with the new brass one. Pt. No. 43104/2.

(j) Re-assemble the friction lock, friction knob and control rod etc., proceeding in the opposite sequence to dismantling.

(k) Before tightening the check nut at the fork end of the control rod adjust the throttle control so that, with the throttle fully open there is .25" clearance between the face of the check nut on the throttle knob and the rear face of the friction lock.

(l) Repeat operations "a", "b", "c", "d" and "g" for the removal of the pivot block on the starboard throttle control.

(m) Replace the steel pivot block with the brass item Pt. No. 43109/2 and re-assemble in the opposite sequence to dismantling.

(n) Before tightening the check nut at the fork end of the control rod adjust the throttle control so that, with the throttle fully open, there is 1.0" clearance between the face of the check nut on the throttle knob and the instrument panel.

(p) Check throttle controls for correct operation and full movement between fully open and fully closed. This movement should be approximately 4" when measured at the control knob.

PARTS REQUIRED Mod. kit No. B7/1 consisting of the following items:-

Part No.	Description	No. Off
43104/2	Friction lock and pivot (Brass)	1
43109/2	Pivot Block (Brass)	1

PARTS REMOVED

Part No.	Description	No. Off
43104/1	Friction lock and pivot (Steel)	1
43109/1	Pivot block (Steel)	1

SPECIAL TOOLS REQUIRED Nil

EFFECT ON WEIGHT AND C.G. Nil

PUBLICATIONS AFFECTED Nil

Victa

DATE: 28.2.63

SERVICE BULLETIN NO. 8

SUBJECT Tailplane lower shroud support brackets. Mod. No. B.9.

PURPOSE To extend lower shroud downwards to give increased clearance between shroud and elevator.

REASON Fouling of elevator by tailplane shroud has occurred in service.

EQUIPMENT AFFECTED Airtourer 100 and 115.

COMPLIANCE Next 100 hourly inspection.

DETAILS Rectification of the above fault has been achieved by replacing the inboard lower support brackets by stiffer, less acute angled brackets.

To replace the support brackets proceed as follows:-

(a) Remove the elevator. (Refer to Chapter 22, para. 3, of the Maintenance Manual).

(b) Remove the two inboard lower shroud support brackets from the tailplane spar and shroud by drilling out the six attachment rivets.

(c) Open up the existing holes in the spar and shroud and also the predrilled holes in the new brackets with a No. 21 drill to suit 5/32" diam. rivets.

(d) Locate the brackets on the lower shroud and rivet using TLP/D 519/BS Tucker Pop rivets.

(e) Line up the brackets with the holes in the tailplane spar and rivet using TLP/D 524/BS Tucker Pop rivets.

(f) Replace elevator. (Refer Chapter 22 Para. 4 of Maintenance Manual).

PARTS REQUIRED Mod. Kit No. B8/1 consisting of the following items:-

Part No.	Description	No. Off
20025/1	Support bracket - lower tailplane shroud - inboard	2
TLP/D 519/BS	5/32" diam. domed h'd, monel Tucker "Pop" rivets .19" long	2
TLP/D 524/BS	5/32" diam. domed h'd, monel Tucker "Pop" rivets .24" long	4

PARTS REMOVED

Part No.	Description	No. Off
20024/1	Support bracket - lower tailplane shroud	2

SPECIAL TOOLS REQUIRED Nil

EFFECT ON WEIGHT AND C.G. Nil

PUBLICATIONS AFFECTED Nil

Victa

DATE: 1.4.63

SERVICE BULLETIN NO. 9.

SUBJECT: Elevator and rudder bellcrank assemblies. Mod. No. B.16.

PURPOSE: To give positive retention of bellcrank bearings.

REASON: Separation of bearings from elevator and rudder bellcranks has occurred in service, causing rudder and elevator controls to lock.

EQUIPMENT AFFECTED: Airtourer 100 and 115.

COMPLIANCE: Immediate action.

DETAILS: Rectification of the above fault has been achieved by rivetting a cover plate on both sides of the bellcrank levers. To rework bellcrank levers proceed as follows:-

(a) Remove baggage compartment floor (refer Chap. 12., para. 12).

(b) Disconnect rudder cables and control rod from rudder bellcrank.

(c) Disconnect elevator control rods from elevator bellcrank.

(d) Cut lockwire and undo bolt securing levers to support bracket.

(e) Remove levers.

(f) Locate cover plates centrally on both faces of each lever, so that predrilled holes are equally spaced between existing countersunk rivets.

(g) Drill right through with No. 30 drill (.128" dia.) and countersink both plates 100° to .22" dia.

(h) Rivet plates to levers and tail down rivets in countersinks and dress flush.

(j) Reassemble bellcranks in bracket ensuring that rudder bellcrank is the lower and that the packing washers go back in same position as previous. Lockwire head of bolt.

(k) Replace elevator and rudder control rods and cables to their respective bellcranks. (Refer Maintenance Manual, Chap. 13, para's. 12,13 & 16).

(l) Inspect rudder and elevator controls for correct movement and operation.

NOTE Following adjustments, overhaul, repair or replacement of any part of the control system, two independent inspections of the portion affected must be carried out and recorded prior to flight. The two inspections must be carried out independently by two persons licensed in the airframe category.

PARTS REQUIRED Mod. kit No. B.10/1, consisting of the following items:-

Part No.	Description	No. Off
52448/1	Bearing Cover Plate	4
AN426 AD-4-12	Rivet, 1/8" dia. C's'k. head	6

PARTS REMOVED Nil

SPECIAL TOOLS REQUIRED Nil

EFFECT ON WEIGHT AND C.G. Nil

PUBLICATIONS AFFECTED Nil

ALERT SERVICE BULLETIN

SUBJECT: External spherical bearings on ailerons, flapperons, elevator and nose leg steering arm.

Until this Alert Bulletin is superseded by a Service Bulletin, an immediate and subsequent daily lubrication of all above bearings will be carried out on all Airtourer 100 and 115 aircraft. Lubricate to Spec. DEF. 2001A as recommended in Chapter 7, Table 1 of Maintenance Manual.

DATE: 19/4/63

SERVICE BULLETIN NO. A.11

ALERT SERVICE BULLETIN

(Confirmation of telegram dated 10/4/63)

AIRTOURER 100 & 115 S/NO. 6 AND SUBSEQUENT

SUBJECT: Intercostal rivets between ribs 2 and 3

Remove walkway material between 6" and 10" aft of the skin joint on the main spar.

Inspect all the spanwise intercostal rivets thus uncovered on top surface of the wing between ribs 2 and 3.

If any of the rivets show signs of working or looseness ground the aircraft immediately and notify Victa Aviation.

Do not replace walkway material if there is no evidence of working or looseness but inspect daily and after each heavy landing until this Alert Bulletin is superseded by a Service Bulletin.

Victa

DATE: 3.5.63

SERVICE BULLETIN NO. A.12

ALERT SERVICE BULLETIN

(Confirmation of telegram dated 2/5/63)

SUBJECT: Tailplane rear attachments brackets

Until this Alert Bulletin is superseded by a Service Bulletin an immediate and subsequent 25 hourly inspection of the tailplane rear attachment bracket is advised for all Airtourer 100 and 115 aircraft.

Cracking has occurred rearwards from the holes of the bolts joining the tailplane to fuselage, on aircraft in excess of 400 hours.

If cracking is detected, remove suspect brackets and replace with new brackets immediately.

Return suspect brackets to Victa Aviation for analysis.