(b) (iii) Continued
operation should, where possible, be performed with a leather punch, but where this type of punch is not available, a shank punch and hammer may be used. It is necessary to support the other side of the tank with a smooth wooden board while punching so that further damage will be prevented. If the damage is greater and consists of a multi-slitted hole, it is advisable to cut away the damaged portion to the absolute minimum circular hole that will just include all the slits.

(iv) The next operation is that of roughening the tank surface to be repaired, great care being necessary in order to avoid increasing the size of the damaged area by tearing. Emery cloth Grade 2 or 3 is used for this operation. The roughening operation should be performed thoroughly, so that the entire area that is to be patched, including curves or steps due to overlap, is given a rough matt surface. The action in using the emery cloth should, as far as possible, be with a circular movement, and should extend to at least 2½ inches from any part of the damage. The object of this is to provide a fresh surface of rubber from which the surface skin has been removed, and to which the cement will readily adhere.

(v) After roughening, the area should be wiped with an acetone soaked swab, so that minute particles of rubber and emery will be removed from the surface. The acetone has the added advantage of enlivening the cured rubber, thus assisting the cement layer to penetrate. It is important not to touch the treated area after wiping, and all dust and foreign matter must be avoided.

(vi) The patch for the repair should be cut from 0.030 inch thick sheet (specification MM.177). The size should be such that it extends not less than 2 inches from any part of the damage. The outer edges of the patch must be skived to produce a feather edge, which will be placed adjacent to the tank. The underside of the patch should be roughened with emery cloth, and wiped with acetone as previously described.

(vii) "Boscoprene" cement (Ref. J.761) consists of two parts, A and B. A whole bottle of accelerator B should be used for a whole tin of Part A, and the mixture thoroughly stirred for about two minutes. It is not advisable to try and mix part of a tin of cement with part of the accelerator, unless the cement has previously been very thoroughly mixed, and the exact amount of accelerator added. The mixed cement is only suitable for use on the day of mixing.

Two coats of "Boscoprene" cement should be applied to each surface to be joined, allowing ten minutes drying time between coats. After the first coat has been applied to each surface, leave for fifteen minutes before joining the cemented surfaces. Maximum tack will be achieved at this period; the patch should be placed on the tank, taking care to avoid

../4

2. USE OF AIR BLOWER:
A tank which has been drained for repair can be freed of fuel vapour by means of air blown through in sufficient quantities to evaporate any residual fuel and to disperse any fuel/air mixture.

3. RISKS OF EXPLOSION:
Because of the risk that explosive vapours might remain inside for a long period, no naked flame is permitted in or near the tank, and special explosion proof inspection lamps must be used.

4. PRECAUTIONS WHEN USING CEMENT:
The solvents used in the cements are highly inflammable, and the usual fire precautions should be observed whenever these cements are being used.

B. METHOD.

1. Cemented Repairs Damage to Tank Liners

(a) Material Required
(i) 0.030" "Flexayn" sheet cured (Spec.MM.177)
(ii) "Terylene" fabric No. 586 (PST.105).
(iii) "Boscoprene" Cement (Spec.J.761, Parts A & B).

In addition to the materials listed above, it is necessary to have a quantity of each of the following:-

(iv) Trichlorethylene BSS.580 Grade 2 or Acetone BSS.509.
(v) Emery cloth Grade 2 or 3.

(b) Procedure.
(i) The repair of the tank liner should be carried out in a relatively dry atmosphere (maximum relative humidity 80%). The temperature control of this atmosphere is not required to be very rigid but temperatures between 65° and 80°F. are likely to be most suitable.

(ii) The repair is effected by cementing the repair patch on the inner surface of the tank liner. Great care should be taken to prepare a perfectly clean surface for repair. Fuel and residue must be totally removed firstly by using a clean swab, followed by a trichlorethylene soaked swab applied to the area. It is important to ensure the removal of stain and any foreign matter which may be present.

(iii) Wherever a slit occurred in the rubber lining, a small hole must be punched at each end of the slit to prevent this from becoming enlarged. If the damage consists of a very small slit, say 1/8 inch in length, it is preferable to punch a hole sufficiently large to cover it completely. A cleaned out circular hole is less liable to further damage than a slit. The punching

../3

VICTA AVIATION DIVISION

A unit of the Victa Group

318 HORSLEY ROAD, MILPERRA, N.S.W., AUSTRALIA TELEPHONE: 77-0122. CABLE ADDRESS: "VICTAMO," SYDNEY

SERVICE LETTER No. 65/2.

25th August, 1965.

METHOD OF REPAIR, BAG TYPE FLEXIBLE FUEL TANKS.

SOURCE:- DUNLOP RUBBER (AUSTRALIA) LIMITED,
AVIATION DIVISION,
PROCESS INSTRUCTION SHEET No. PST 106, Issue 2.

A. GENERAL. No attempt should be made to repair a "Flexilite" tank if the damage occurs within the following areas:

(a) Less than 1 inch from the outer diameter of any fitting attachments.

(b) At a corner of the tank.

(c) Damage to pipe moulding connections.

(d) Damage to pad mouldings.

Tanks thus damaged should be returned to the manufacturer who will advise on the possibility of repair, and carry out the necessary work if the tank is repairable. All major repairs on tank linings must be done by skilled operators, and must be pressure tested before being passed for service.

WARNING

No naked flame is to be brought within 24 feet of the tank which contains, or has contained, fuel, until full safety precautions have been taken. Under no circumstances should a naked flame be brought inside the tank. All operations should be performed in the open air, or in a well ventilated building.

1. DRAINAGE:
The tank must first be drained as far as possible. This must be done very carefully, because a very small quantity of fuel is sufficient to create a dangerous vapour. The tank must be emptied from its lowest point, and its position must be changed during the drainage process.

../2

Victa AVIATION DIVISION

A unit of the Victa Group

318 HORSLEY ROAD, MILPERRA, N.S.W., AUSTRALIA

TELEPHONE: 77-0122. CABLE ADDRESS: "VICTAMO," SYDNEY

SERVICE LETTER No. 65/3

7th October, 1965.

INSPECTION OF NOSE LEG STRUT.

Further to Service Bulletin No. 48, we highly recommend immediate removal of the Steering Collar Pt. No. 62006/1 and inspection for cracks between the rivet holes in the exposed area, using dye penetrant method as called for in Bulletin No. 48. Further inspections to be carried out in accordance with Table No. 1 of amended Service Bulletin No. 48, until such time as infinite life legs are available for all aircraft.

If cracks are evident, ground aircraft and inform Victa Aviation Division, Service Department, and a replacement assembly will be forwarded.

This Service Letter does not apply to aircraft already fitted with infinite life leg, Part No. 62049/1,/2 or /3, (Production introduction being A/C Serial No. 112), but is applicable to all aircraft fitted with Nose leg assembly Pt. No. 62001/3, which is readily identified by the rivetted collar.

D.C.A. Approved.

VICTA AVIATION DIVISION

A unit of the Victa Group

318 HORSLEY ROAD, MILPERRA, N.S.W., AUSTRALIA TELEPHONE: 77-0122. CABLE ADDRESS: "VICTAMO," SYDNEY

7th October, 1965.

Dear Owner,

Since the issue of Service Bulletin No. 48, pertaining to the inspection of Undercarriage Nose Legs, further information has come to hand indicating that a further inspection of the leg at this time is highly desirable.

We therefore suggest that you carry out the inspection as recommended in Service Letter No. 65/3 as soon as possible, or in the case of the private owner, take your aircraft to your nearest service agent as soon as possible, so that he can carry it out. A list of service agents is attached.

We would like to apologise for any inconvenience this inspection may cause you, but at the same time assure you that the production of the infinite life leg has been accelerated to ensure the minimum of delay in replacement of the old type legs. The charge for the new infinite life legs will be dependent on the number of hours flown on the old type legs.

Yours faithfully,
VICTA LIMITED.

Brian E. Carr.

B. E. CARR.
DESIGN MANAGER-AVIATION DIVISION.

VICTA

SERVICE LETTER

AVIATION DIVISION HORSLEY ROAD, CAMPBELLTOWN, N.S.W., AUSTRALIA

Date: February, 1966

Vol. 66 No. 1

D.C.A. APPROVED

RECOMMENDED ENGINE OIL, VICTA AIRCRAFT

In recent months extensive investigations have been carried out to determine the benefits to be gained by using additive oils in Victa Airtourer aircraft. These are selected mineral oil base stocks containing additives to give high viscosity index, oxidation, stability, dispersancy and anti-foam properties. Additive oils have been developed for the modern reciprocating engine, and have been recommended exclusively by the motor trade for many years. The dispersant property prevents contamination, which enters the oil from the combustion chamber, agglomerating, thereby reducing the tendency to form deposits. Both Continental and Lycoming have issued their own specifications covering dispersant oils and recommend their use in the O-200 and O-235 engines.

It is now considered that the use of a dispersant oil meeting Continental Specification MHS24A or Lycoming Specification 301E will result in cooler operation and more economy during overhaul due to engine components having less wear at reconditioning, and that there will be a substantial reduction in the formation of sludge, gum and other lubricating oil/combustion process by-products. A significant reduction in deposits in piston ring grooves, piston skirts and on piston undercrowns may be expected. This oil should also promote better engine lubrication and reliability by reducing the possibility of oil starvation and acid attack on bearings. There is also a marked reduction in deposits on filters, minimising the possibility of filter by-passing with consequent release of contamination into the oil system.

It is therefore recommended that Victa Airtourer aircraft be operated on dispersant engine oil. Although it is considered that most benefit can be expected if the change is made on low time engines, there is no objection to the change at any time during the engine life if the precautions laid down in Chapter 7, para. 2 of the Maintenance manual are observed.

Dispersant oils have a tendency to turn very dark even after only a few hours operation. If this dark colour is encountered, it should not be construed as being indicative of oil breakdown, as this is its normal colour under operating conditions.

Also, additive oils may appear somewhat less viscous than straight mineral oil of the same grade. This is due to the higher viscosity index which gives the oil lower viscosity at room temperature.

If while operating on dispersant oils, it becomes necessary to top up using a straight mineral oil, there will be no significant effect on the engine oil characteristics.

Continental Specification MHS 24A provides for two classes of dispersant lubricating oil.

Class 1	-	Ashless Oils
Class 2	-	Ash Residue Oils

All dispersant oils have additives to provide properties to meet specifications. Class 1 oils differ from Class 2 in that their additives when burned leave no ash residue. The oil does not therefore contribute metallic ash toward the formation of hard carbon in the combustion space with its possible hazard of pre-ignition and spark plug fouling. Oils of the type that meet Class 1 of the Continental Spec. MHS 24A also meet the Military Specification MIL-L-22851A, which is used in most Military reciprocating engines and by many airlines.

Full information on oils approved for use in Victa aircraft is available in Chapter 7 of the relevant Maintenance Manual, but the following are the Victa recommended oils:-

ENGINE OIL SAE 40

+ Aero Shell W60
+ B.P. Aviation Oil 80 ADT
Castrol Aero A/2
Esso Aviation HD 80
++ Mobil Aero Grey Band HD
Golden Fleece Aero Oil OMD170

ENGINE OIL SAE 50

+ Aero Shell W100
+ B.P. Aviation Oil 100 ADT
Castrol Aero B/2
Esso Aviation Oil HD100
++ Mobil Aero Red Band HD

NOTES
+ Meets Continental Spec. MHS24A Class 1 & Lycoming Spec. 301E
++ Meets Continental Spec. MHS24A Class 2 & Lycoming Spec. 301E

All new aircraft, and all aircraft in for inspection and maintenance at Victa Service Department will normally be delivered with an ashless dispersant oil in the engine.

VICTA AVIATION DIVISION

A unit of the Victa Group

HORSLEY ROAD, MILPERRA, N.S.W., AUSTRALIA TELEPHONE: 77-0122. CABLE ADDRESS: "VICTAMO," SYDNEY

11/3/64

SERVICE LETTER NO. 64/1

Carbon Monoxide Contamination of Cockpit

Airtourer 100 Aircraft

An incident of carbon monxide contamination of an Airtourer 100 cockpit, has occurred in flight, resulting in the pilot having a headache and nausea due to carbon monoxide poisoning.

A careful inspection of the exhaust system on this aircraft revealed the source of the carbon monoxide to be the junction of the engine exhaust pipes and the muffler stacks.

The exhaust pipes fit inside the stacks and are clamped together by twin-shell clamps. A seal made of asbestos string wrapped around the pipes at point of juncture before clamping them together was found to reduce the carbon monoxide content in the cockpit to well below the permissable limit.

Since every aircraft is tested for carbon monoxide contamination during pre-delivery test flight there is little likelyhood of cockpit contamination on production aircraft unless the above joint is disturbed in service.

It is therefore requested, that every Airtourer 100 aircraft in service, which has had its exhaust system removed and re-installed, is check for carbon monoxide contamination using a M.S.A. Toxic Gas Detector, available on loan from D.C.A. regional offices. A similar check should be carried out if reports have been received of instructors or pilots suffering from headaches or nausea.

If traces of carbon monoxide contamination above .005% are found, disconnect the cabin heating, by removing the tube joining the port muffler and the gate valve on the firewall. Remove the gate valve and blank off the hole in the bulkhead with a 22 swg mild steel plate rivetted to the bulkhead and sealed with a suitable caulking compound.

A Service Bulletin will follow this letter, giving information on the seals to be used on the exhaust system before the cabin heating system can be connected again.

D.C.A. Approved.

VICTA AVIATION DIVISION

A unit of the Victa Group

HORSLEY ROAD, MILPERRA, N.S.W., AUSTRALIA TELEPHONE: 77-0122. CABLE ADDRESS: "VICTAMO," SYDNEY

11/3/64

SERVICE LETTER 64/2

Flap Operating Speed

Airtourer 100 Aircraft

As a result of additional engineering calculations, we are able to advise an increase in permissable flap lowering speed of 13 knots to 100 knots I A.S.

This figure has already been incorporated in later production Airtourer 100 aircraft however some do exist which have the ASI white banded to 87 knots and the limitations placard so marked. So that users may take full benefit of this improvement it is recommended that all aircraft with the 87 knots limitation still present be altered in the following way.

1. Speed limitation placard to be altered to read 100 knots in lieu of 87 knots as max. flap operating speed.

2. White band on ASI altered to 100 knots from 87 knots.

D.C.A. Approved

Victa AVIATION DIVISION

A unit of the Victa Group

HORSLEY ROAD, MILPERRA, N.S.W., AUSTRALIA TELEPHONE: 77-0122. CABLE ADDRESS: "VICTAMO," SYDNEY

SERVICE BULLETIN No. 64B 25/3/66

RELATIONSHIPS

AIRCRAFT HELEANA AT CHART

This letter is to inform all Airtourer operators that the fuel contents indicating system has been found to be unreliable.

Victa are currently working on a new intermittent system which will give an accurate indication, particularly towards the empty side of the scale.

Victa are also producing fuel tank dip-sticks which will be distributed to all operators free of charge. These will have to be used in operation on all aircraft until the new transmitter system is installed.

There have been 14 cases reported of fuel tank buttons becoming unfastened in service. These buttons secure the top surface of the tank to the wing skin, and thereby ensure the tanks shape and capacity.

Flight testing has shown the trouble to be caused by the tank vent being located in such a position on the side of the fuselage, where, in some flight conditions an aerodynamic suction of up to 6½ lb/sq. ft. will result. This suction is sufficient to pull the upper buttons from the wing skin.

This problem has been solved by rivetting a scoop Pt. No. 56020/1, over the vent, thereby pressurising the tank to a minimum of 6½ lb/sq. ft. in most adverse flight conditions. This modification has been described in Service Bulletin No. 28.

It is therefore necessary to check all Airtourer aircraft to ascertain that all the upper buttons of the fuel tank are pushed correctly into position. Access to these buttons is by dropping the fuel tank sump.

Compliance is mandatory at the next 100 hourly inspection for all Airtourer aircraft.

D.C.A. APPROVED
[illegible]

VICTA AVIATION DIVISION

A unit of the Victa Group

HORSLEY ROAD, MILPERRA, N.S.W., AUSTRALIA

TELEPHONE: 77-0122. CABLE ADDRESS: "VICTAMO," SYDNEY

[illegible]

[illegible]

[illegible]

VICTA AVIATION DIVISION

A unit of the Victa Group

HORSLEY ROAD, MILPERRA, N.S.W., AUSTRALIA TELEPHONE: 77-0122. CABLE ADDRESS: "VICTAMO," SYDNEY

SERVICE LETTER NO. 64/5 23/4/64

RECOMMENDATIONS FOR STALL WARNING INSTALLATION

Since the distribution of modification kits for the fitment of stall warning to Airtourer aircraft, several suggestions have been made to ease the incorporation of the modification. The function or integrity of the system is not affected by these recommendations in any way and they may be accepted only if thought worthwhile

1. A check on the position of the detector vane around the profile may be obtained by measurement along the contour between the bottom edge of the vane and the skin join on the bottom surface at the spar, refer Fig. 1.

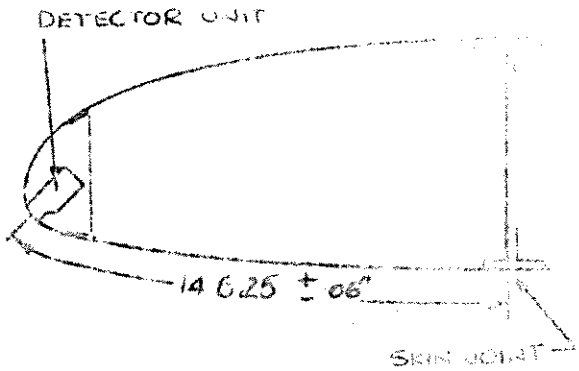

Fig. 1

Ensure that the detector is at the mid-point of its adjustment when measuring. The position of the skin join is not jigged, however, production techniques are such that it may be used as a reliable and easy check on the method to position the detector as shown on Victa Drg. No. 02-03075.

2. It has been found that the wire from the wing disconnect to the horn (Part No. 02-03075/22) may be routed more conveniently by passing it up over the wing attachment frame and back, clipping to the lower longeron under the seat before passing through the repositioned grommet in the bottom left hand corner of the seat back frame.

/2

3 The detector earth wire anchor [illegible] positioned behind the inboard [illegible] (Part No. 02-10058/1) before installation. In [illegible] 8

4 Protection for wire, Part No. 02-0375/22, against damage from shoes in the area where it runs along the cockpit floor may be provided by a guard as shown, Refer Fig. 2 & 3. Bend up from 22 or 24 SWG aluminium alloy, and rivet in place between the floor and cockpit side using [illegible] pop rivets at 3" pitch.

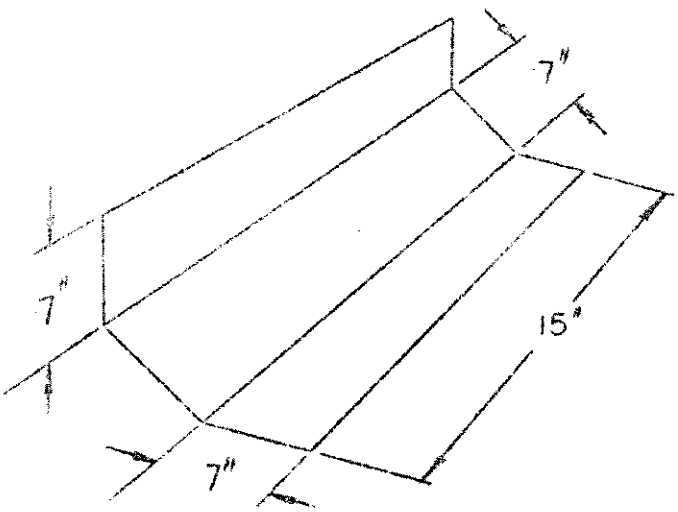

Fig. 2

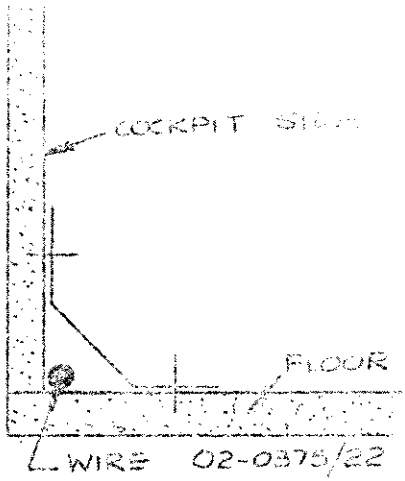

Fig. 3

D. C. A. APPROVED

VICTA AVIATION DIVISION

A unit of the Victa Group

HORSLEY ROAD, MILPERRA, N.S.W., AUSTRALIA TELEPHONE: 77-0122. CABLE ADDRESS: "VICTAMO," SYDNEY

SERVICE LETTER NO. 64/6. 2/7/64

TIGHTENING TORQUE, OIL TEMPERATURE SENSING BULB ADAPTOR.-AIRTOURER 100 & 115.

Service experience has shown that the adaptor for the oil temperature bulb may be damaged by overtorqueing during installation or in an attempt to stop an oil leak. Failure of this part while the engine is running will result in complete oil loss from the engine. A copper-asbestos gasket is provided behind the adaptor and will ensure a seal without excessive tightening.

The following precautions are recommended when the oil temperature bulb or adaptor is removed:

(i) Inspect the gasket for damage or excessive deformation and replace if necessary.

(ii) Install adaptor and tighten to 5-8 ft/lbs. Install bulb and tighten nut to 10-20 ft/lbs while holding adaptor with a second spanner.

These recommendations will be incorporated into the maintenance manual at the next amendment.

D.C.A. APPROVED

VICTA AVIATION DIVISION

A unit of the Victa Group

HORSLEY ROAD, MILPERRA, N.S.W., AUSTRALIA

TELEPHONE: 77-0122. CABLE ADDRESS: "VICTAMO," SYDNEY

[illegible] 15/9/1964.

[illegible]

[illegible] of the tailplane in experienced during flight, the 0 - [illegible] diameter bolts securing the two tailplane attachment brackets (Part No. 2003A/2 and 2003A/1) to the rear fuselage frame station [illegible] are to be inspected for evidence of [illegible] caused by bolt shrinkage. If any such evidence is found, the [illegible] bolts and AN 365-[illegible] nuts are to be replaced and torqued to 30 - 40 in. lb.

D.J.A. [illegible]

VICTA AVIATION DIVISION

A unit of the Victa Group

HORSLEY ROAD, MILPERRA, N.S.W., AUSTRALIA TELEPHONE: 77-0122. CABLE ADDRESS: "VICTAMO," SYDNEY

SERVICE LETTER NO. 64/8.

CHECKING AND MAINTAINING PRELOAD OF MAIN UNDERCARRIAGE CLAMP PLATES - AT 100 AND 115 AIRCRAFT.

Service experience has shown that initial preload of main undercarriage attachment.clamps decreases in the first 25-50 flying hours due to "bedding in" of the leg on the bronze inserts in the clamp plates.

It is recommended that checking of the clamp plate assembly for loss of preload be carried out at 25 hourly intervals during the first 100 hours flying after initial fitment, or commencement of flying of a new aircraft, and at 100 hourly inspections, thereafter until it is established that no further loss of preload is evident. The inspection period may then be extended to 200 hourly intervals.

Preload is provided by a "bowing" of the lower clamp plate and this is achieved initially by fitting the lower clamp plate with leg in position, and gradually tightening up the attachment bolts (nuts in the case of aircraft serial Nos. 1-5) until the clamp plate just engages the lower surface of the leg. With the lower clamp plate unbowed the clearance between the upper and lower clamp plates is checked to see that it is 015"- 020" at each end. If the clearance is greater than these figures the difference is made up by fitting washers between the clamp plates. Washers are now serviced in .010", .015" and .020" thickness and are available from our Spares Department under the following Part Numbers -

.010" ..... P/N 02-61027/1
.015" ..... P/N 02-61028/1
.020" ..... P/N 02-61029/1

These used in conjunction with the standard AN960-6 and AN960-6L washers permit much closer adjustment than previously. When the desired clearance figure has been obtained the attach bolts are tightened up to 216 - 240 in. lbs. This gives a .015" - .020" bow or arc on the lower clamp plate. It is recommended that the attachment bolts be lightly lubricated before fitment to assist in obtaining accurate torque figures.

A convenient methd of ascertaining the preload on the clamp plates without disturbing the installation is as follows:-

(a) Remove screws attaching the main leg fairing and hinge fairing down.

(b) Place a straight edge along the underside of the lower clamp plate and by means of feeler gauges at each end of the clamp plate measure the bow. (See Figure 1 - Sheet 3).

(c) If the gap at either end of the clamp plate is less than the figure shown remove sufficient shim washers from between the plates to achieve this dimension when the bolts are torqued to 216 - 240 inch lbs.

Should it be found impossible to achieve the desired dimensions even with all the washers removed, it will indicate that the bronze inserts P/N 61021/1 (2 off) in the lower clamp plate or P/N 61018/1 (1 off) in the upper clamp plate will, due to wear, require replacement. In some instances both upper and lower inserts may need replacement. This may be done by punching out the worn inserts (holes are provided in the back of each plate for this purpose) and fitting new ones.

The assembly of the clamp plates with new inserts and the obtaining of the specified preload should be as outlined in the earlier part of this letter and the 25 hourly inspection periods adhered to.

It is also recommended that the bolt holes in the lower clamp plates be opened out with a letter "V" drill. This will ensure adequate clearance around the attach bolts when the plate is bowed under preload. (Aircraft S/N 6 and subsequent only).

D.C.A. APPROVED

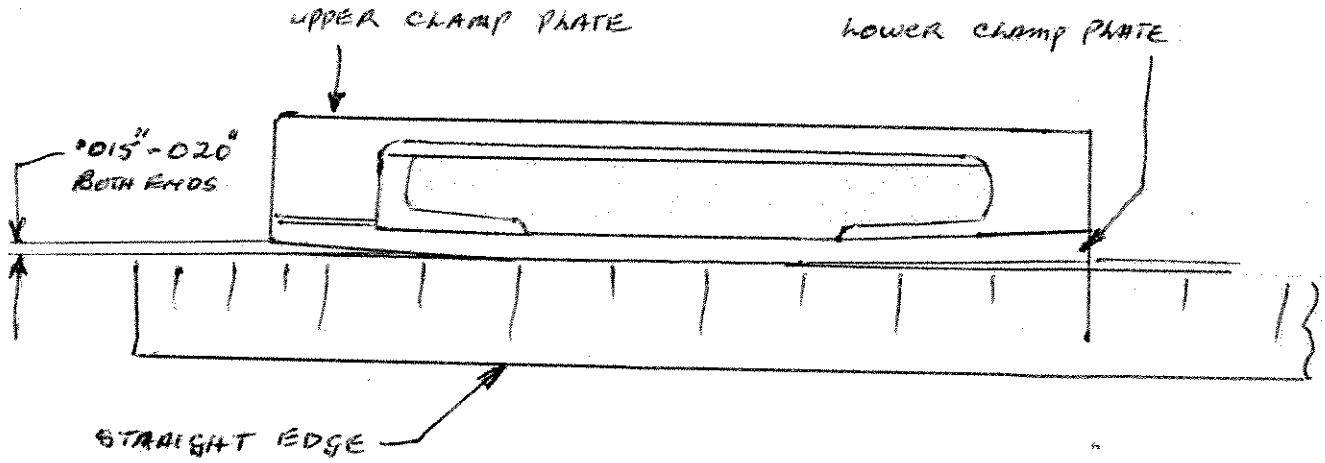
UPPER CLAMP PLATE
LOWER CLAMP PLATE
·015"-·020"
BOTH ENDS
STRAIGHT EDGE

FIGURE 1

VICTA AVIATION DIVISION

A unit of the Victa Group

HORSLEY ROAD, MILPERRA, N.S.W., AUSTRALIA TELEPHONE: 77-0122 CABLE ADDRESS: "VICTAMO," SYDNEY

12th November, 1964.

SERVICE LETTER NO. 64/9.

CONTINENTAL OR ROLLS ROYCE CONTINENTAL ENGINE O-200-A AS FITTED TO VICTA AIRTOURER 100 AIRCRAFT.

It is the intention of this Service Letter to clarify the variations of this basic engine Type which have been fitted to the Airtourer 100 Model and in doing so obviate any inconvenience to the operator. Should he wish to avail himself of an engine exchange service or when ordering spare parts.

(1) To positively identify the particular engine variation fitted to any Airtourer 100 this Company has allocated a part number for each variation. These are as follows:-

VICTA P/No.	MANUFACTURER'S SPECIFICATION.	DESCRIPTION
40008/1	CMC-10	Continental or Rolls Royce Continental Aircraft Engine, Model O.200.A. including following components and accessories. 1 off P/N 1101890 20 AMP Generator (Delco Remy) 1 " " 40585 Fuel Pump (AC.P/N 1539867) 1 " " 62842 Camshaft. 1 " " EQ 5334 Cooler equipment-oil. 1 " " 40005/1 Adaptor-oil cooler (Vi ta P/N). 3 " " 40006/1 Stud-Oil Cooler (Victa P/N) 1 " " GAS 1-1 Gasket " " " " Also with R/H crankcase having machined Fuel Pump Pad.
40008/2	ROLLS ROYCE CES - 1021	As for Victa P/N 40008/1 with following exception:- 1 off P/N 1101898. 35 AMP Generator (in lieu of 20 AMP Generator)

../2

VICTA LIMITED

HORSLEY ROAD, MILPERRA, N.S.W., AUSTRALIA PHONE: 77-0122. CABLE ADDRESS: "VICTAMO," SYDNEY

SERVICE LETTER NO. 64/10 6th December, 1964

Inspection - Tail Cone Area.

A case has occurred where a rubber block used for the support of the elevator in the "UP" position to facilitate the painting of elevator blade, has inadvertently and unbeknown to the spray painter fallen into the tail cone.

This was subsequently found by lifting the elevator and [illegible] into the tail cone through the blade aperture, but owing to the [illegible] it is possible that the piece of rubber could have fallen into the last bay of the fuselage and not be seen by looking through the blade aperture in the tail cone. It is recommended that, if this area has not been previously inspected, the tail cone be removed immediately, and the area of the last bay of the fuselage and the tail cone itself be [illegible] to ensure that no such object is present, as in certain circumstances it could be dislodged.

It is not anticipated that any foreign object will be found, but this Service Letter is issued as a precautionary measure.

This Service Letter applies to all Airtourer 100 and 115 aircraft with serial numbers of the following Serial Nos.

	1	S/N	42	S/N	65
	2		50	"	66
	5		51	"	67
	17	"	52	"	71
	22		53	"	72
	23	"	54	"	74
	27	"	55	"	77
	30	"	57	"	78
	32		60	"	81
	36	"	61	"	82
	38		63	"	83
		"	64	"	87 & subsequent.

R. G. A. [illegible]