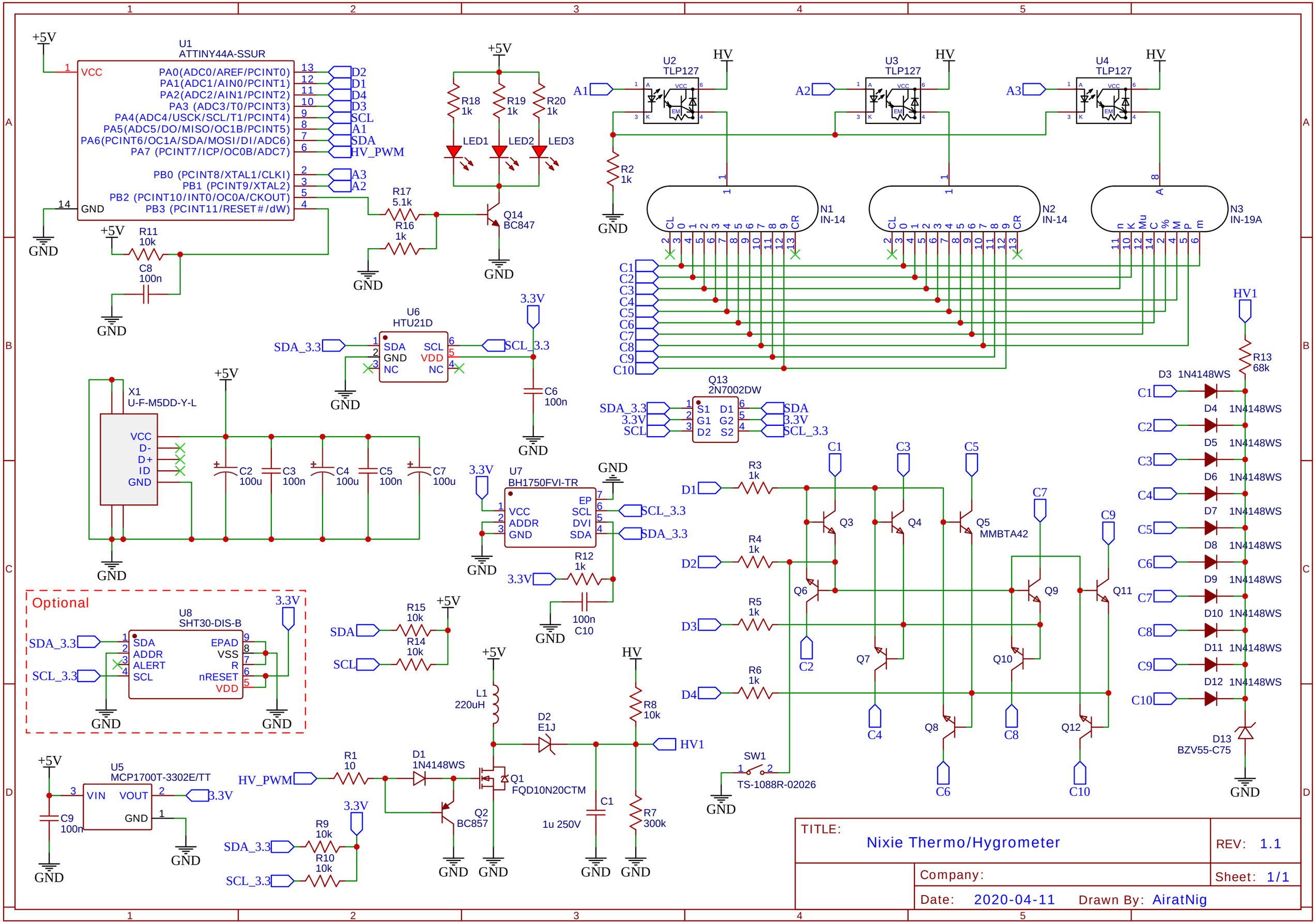

TITLE: Nixie Thermo/Hygrometer

REV: 1.1

Company:

Sheet: 1/1

Date: 2020-04-11

Drawn By: AiratNig