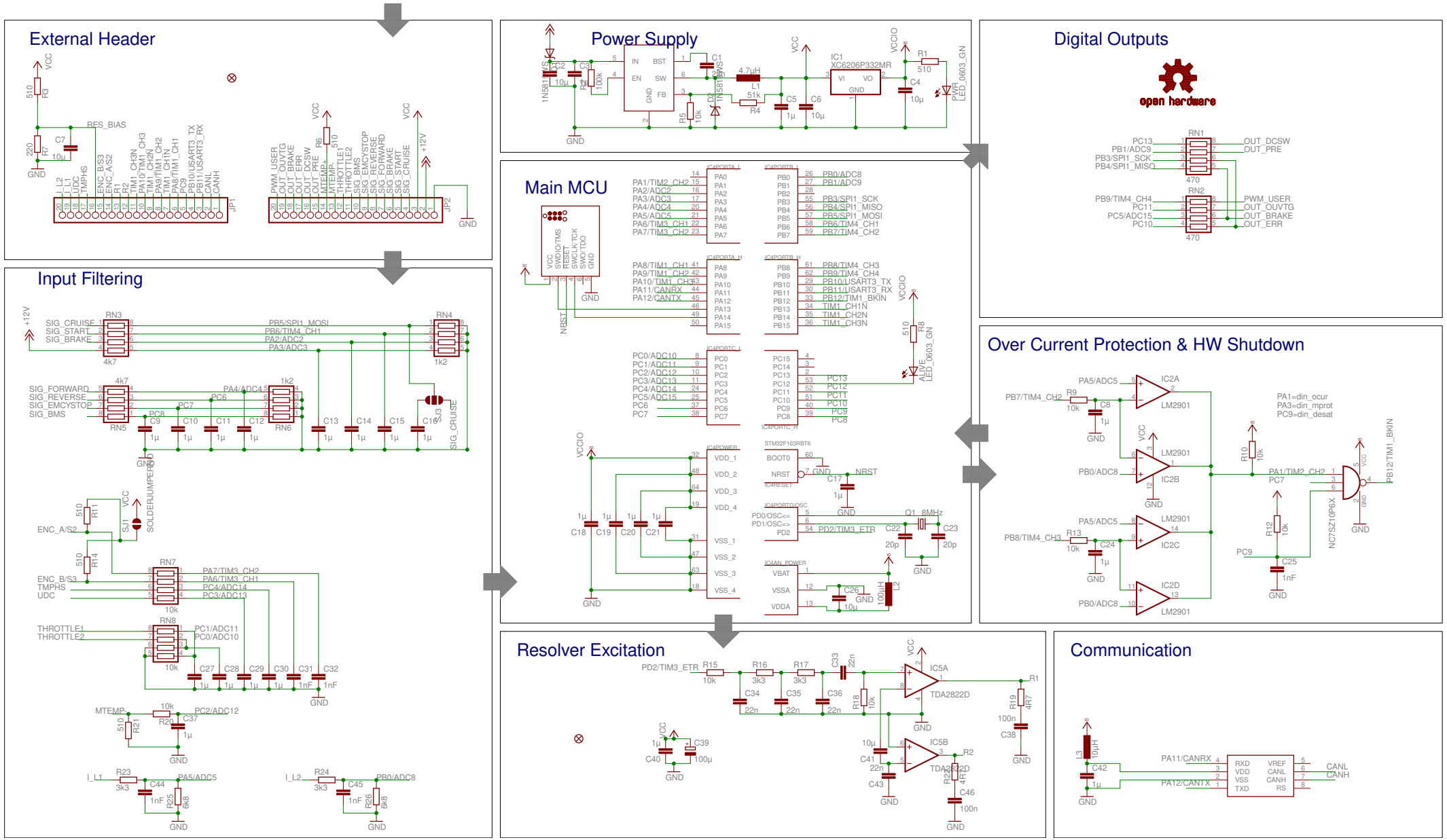
External Header
Power Supply
Digital Outputs
Main MCU
Input Filtering
Over Current Protection & HW Shutdown
Resolver Excitation
Communication
open hardware