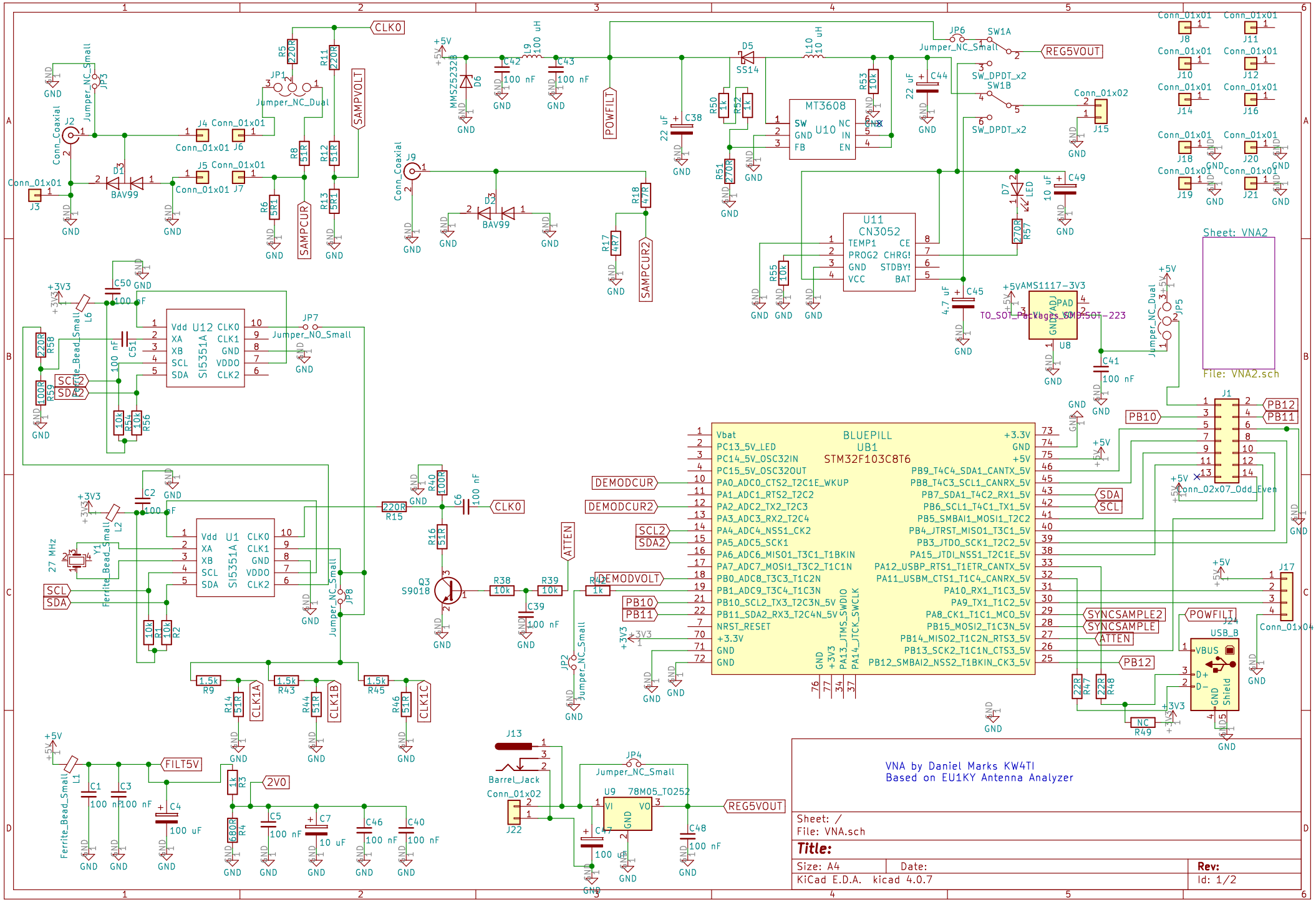
VNA by Daniel Marks KW4TI
Based on EU1KY Antenna Analyzer
Sheet: /
File: VNA.sch
Title:
Size: A4
Date:
Rev:
KiCad E.D.A. kicad 4.0.7
Id: 1/2
BLUEPILL
UB1
STM32F103C8T6
MT3608
U10
U11
CN3052
U12
SI5351A
U1
SI5351A
AMS1117-3V3
U8
Sheet: VNA2
File: VNA2.sch
J1
Conn_02x07_Odd_Even
J17
Conn_01x04
USB_B
J24
J22
Barrel_Jack
Conn_01x02
U9
78M05_TO252
REG5VOUT
CLK0
SAMPVOLT
SAMPCUR
SAMPCUR2
POWFILT
DEMODCUR
DEMODCUR2
DEMODVOLT
SCL2
SDA2
SCL
SDA
PB10
PB11
PB12
SYNCSAMPLE2
SYNCSAMPLE
ATTEN
CLK1A
CLK1B
CLK1C
FILT5V
2V0
27 MHz
Y1
Conn_Coaxial
J2
J9
Conn_01x01
J3
BAV99
D1
D2
D3
D5
SS14
D6
MMSZ5232B
D7
LED
Jumper_NC_Small
JP3
JP1
Jumper_NC_Dual
JP6
SW1A
SW_DPDT_x2
SW1B
JP7
Jumper_NO_Small
JP5
JP8
JP2
JP4
Ferrite_Bead_Small
L1
L2
L6
L9
100 uH
L10
10 uH
Conn_01x02
J15
Conn_01x01
J8
J10
J11
J12
J14
J16
J18
J19
J20
J21
J4
J5
J6
J7
GND
+5V
+3V3
NC

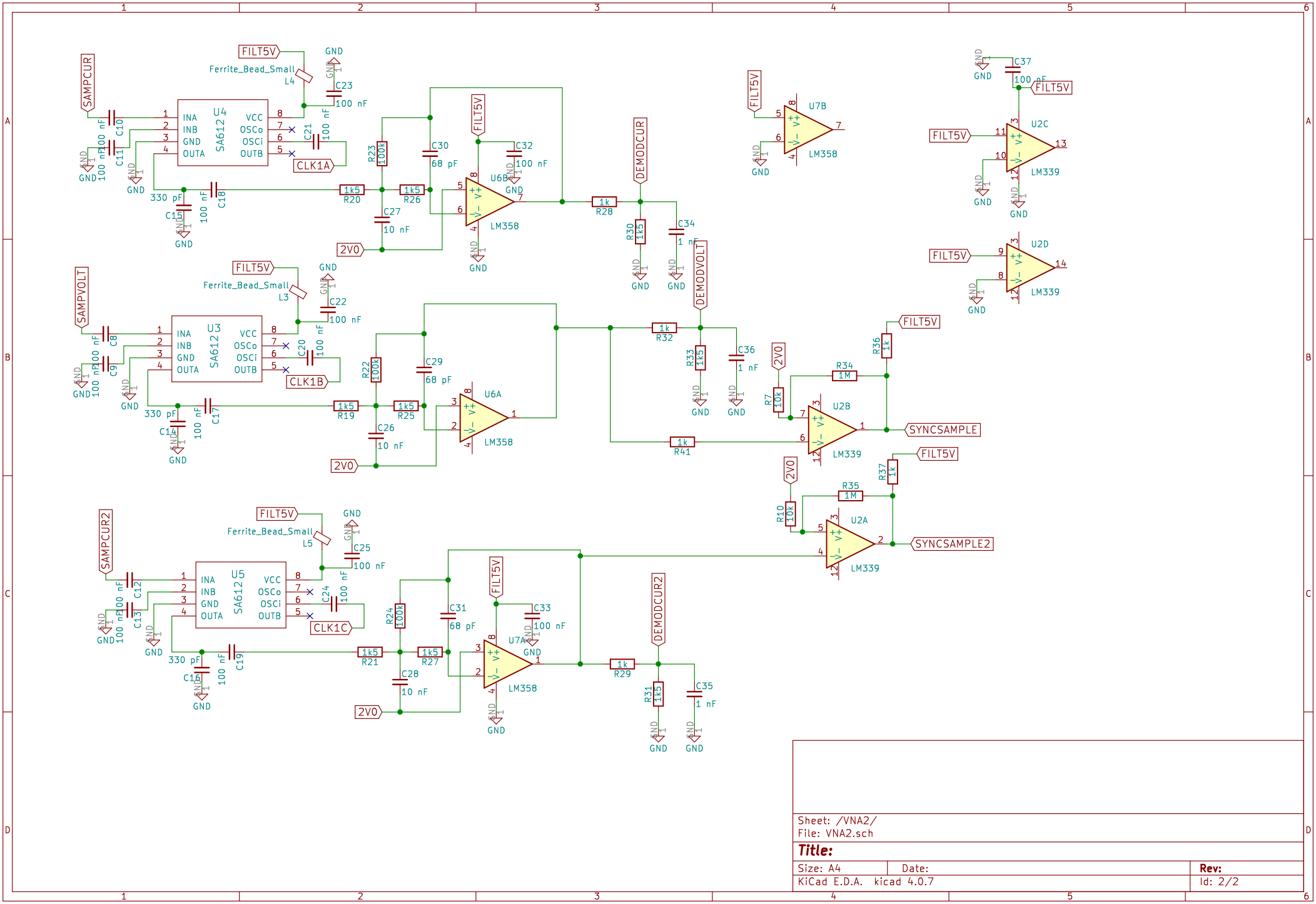

Sheet: /VNA2/
File: VNA2.sch

Title:

Size: A4	Date:	Rev:
KiCad E.D.A. kicad 4.0.7		Id: 2/2