Design and Implementation of a Secure Digital In-Memory Computing Core

Ajay Sabareesh Balamurugan and Kaiyuan Yang

Department of Electrical and Computer Engineering
Rice University, Houston, TX

***Abstract*—AI models deployed on the edge are increasingly vulnerable to side-channel attacks (SCA), which exploit power leakages to compromise the parameters of proprietary AI models. This leads to the loss of intellectual property and makes the deployment of cutting-edge models at the edge risky. Current state-of-the-art implementations address these vulnerabilities using physical measures such as switched capacitors and masking schemes that have a high area overhead of about 12×–13×. Our solution aims to reduce this overhead and improve robustness by implementing a Threshold Implementation (TI) based Digital In-Memory Computing (DIMC) core for neural network inference. By leveraging 3-share Boolean masking and XNOR-based multipliers, we aim to reduce the need for hybrid components and complex PRNG routing. We believe that this approach will lead to a reduction in area overhead to about 2×, which is a 60% improvement in area efficiency over current baseline designs.**

***Index Terms*—Digital In-Memory Computing (DIMC), Side-Channel Attacks (SCA), Hardware Security, Boolean Masking, Edge AI, Threshold Implementation (TI).**

I. Introduction

THE rapid deployment of Artificial Intelligence (AI) at the edge has fundamentally shifted the computing landscape, bringing real-time inference to mobile devices, IoT sensors, and autonomous systems. However, traditional Von Neumann architectures suffer from the ”memory wall” bottleneck. In these traditional setups, the continuous movement of data between the memory and processing units consumes significantly more energy than the actual computation itself. Digital In-Memory Computing (DIMC) has emerged as a critical solution to this inefficiency. By embedding arithmetic logic directly within or near the memory array, DIMC drastically reduces data shuttling, offering high-throughput and energy-efficient neural network acceleration.

Despite these massive performance benefits, edge AI devices operate in physically exposed environments, making them highly susceptible to physical hardware exploits. Among these, Side-Channel Attacks (SCA) represent a severe threat. SCAs exploit unintentional physical leakages—such as power consumption, electromagnetic emissions, or timing variations—to reverse-engineer the proprietary parameters and weights of deployed AI models. Power Analysis attacks, such as Differential Power Analysis (DPA) and Correlation Power Analysis (CPA), are particularly devastating to DIMC architectures because the parallel activation of memory rows creates a highly correlated, easily measurable power signature.

Securing these edge devices is a paramount challenge, but current state-of-the-art countermeasures often fall into two categories, each with their own drawbacks. Purely physical security techniques, such as switched-capacitor circuits, rely heavily on analog components. The primary vulnerability of these designs is that ensuring these analog components are tuned to prevent any power leakage across all operating conditions is exceptionally difficult and prone to failure. Conversely, purely algorithmic countermeasures, such as Boolean masking, offer provable security guarantees. However, securely implementing both the linear and non-linear masking operations directly in hardware leads to a massive bloat in area overhead—often resulting in a core 12 to 13 times the size of an unprotected baseline. Because of these distinct limitations, there is an urgent need for a hybrid approach. By strategically combining physical security measures with masking-based techniques, we can relax the strict analog tuning requirements while simultaneously bypassing the massive area penalties caused by complex non-linear masking. This hybrid methodology aims to drastically reduce the area overhead of these DIMC cores while maintaining the robust security required for edge deployment.

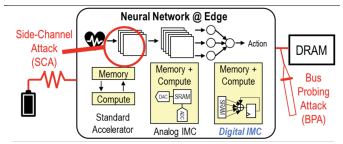

Fig. 1. Threat landscape for Neural Networks at the Edge, illustrating non-invasive Side-Channel Attacks (SCA) leveraging physical power signatures and semi-invasive Bus Probing Attacks (BPA) targeting external memory interfaces.

II. Methodology

A. Threat Model and Security Assumptions

In alignment with standard hardware security evaluations, we assume a powerful adversary with local, physical access to the edge device. The attacker is capable of performing non-invasive Side-Channel Attacks (SCA), specifically monitoring the dynamic power consumption and electromagnetic (EM) emissions during neural network inference. Furthermore, we assume the adversary operates under Kerckhoffs’s principle, possessing full knowledge of the implemented neural network architecture, masking algorithms, and the underlying DIMC hardware logic, lacking only the proprietary model weights. The primary objective of this architecture is to provide provable resistance against first-order attacks and ensure Probe-

Isolating Non-Interference (PINI) for the internal datapath, strictly limiting any internal probe leakage to a single share index.

To achieve a balance between robust Side-Channel Attack (SCA) resistance and the area constraints of edge devices, this work proposes a hybrid security architecture, as illustrated in Fig. 3. The methodology centers on the principle that mathematical linearity is domain-dependent, allowing for the strategic partitioning of operations between algorithmic masking and physical countermeasures.

B. Masking Domains and Linearity Constraints

Hardware masking relies on splitting a sensitive variable x into independent shares to decorrelate the power consumption from the underlying data. We distinguish between two primary masking domains utilized in this architecture:

1) **Boolean Masking:** A variable x is represented by n shares (where $n = 3$ for this implementation) such that:

$$x = x_1 \oplus x_2 \oplus x_3 \tag{1}$$

This domain is highly efficient for bitwise XOR operations but incurs significant overhead for arithmetic operations.

2) **Additive (Arithmetic) Masking:** A variable x is represented as:

$$x = (A + B + \ldots) \pmod{2^k} \tag{2}$$

While addition is linear in this domain, bitwise logic becomes non-linear and area-prohibitive.

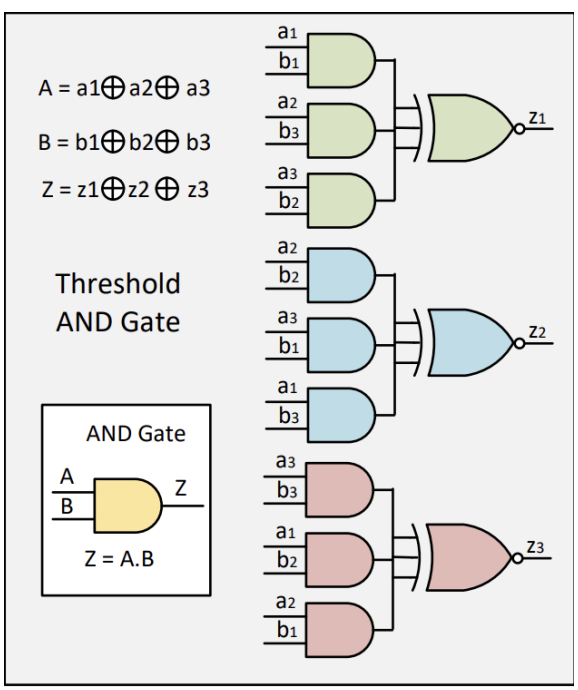

Fig. 2. Logic expansion of a single AND gate using a 3-share Threshold Implementation (TI). The requirement to compute nine distinct cross-products significantly increases the logic depth and area overhead compared to the unprotected baseline.

The fundamental challenge in secure DIMC design is that standard **AND**-based multiplication is non-linear relative to the Boolean domain defined in (1). As illustrated in Fig. 2, protecting a single non-linear AND operation requires evaluating nine distinct cross-product terms to maintain the non-completeness property. Implementing these complex non-linear gadgets directly in hardware leads to a massive bloat in area overhead—often resulting in a core $12\times$ to $13\times$ the size of an unprotected baseline.

C. Linearized IMC Multiplication via XNOR

To alleviate the non-linearity tax, our methodology utilizes **XNOR-based bitwise multiplication** within the IMC macro (labeled as the DIMC Array in Fig. 3). By restructuring the multiplication to be linear in the Boolean domain, we ensure that partial products can be computed and processed through a 3-share masked **Tree Adder** without inter-share communication. This approach satisfies the *Non-completeness* property of Threshold Implementation (TI), preventing leakage even in the presence of hardware glitches, while significantly reducing the logic depth and area footprint compared to masked AND-gates.

D. Near-Memory Post-Computation Partitioning

While the high-parallelism MAC operations are performed within the IMC macro, the non-linear layers—specifically **Batch Normalization** and **ReLU**—are executed as **post-computation** in the Near-Memory Computing (NMC) unit (see Fig. 3). By partitioning the architecture this way, we avoid the prohibitive cost of implementing non-linear Boolean masking for the entire pipeline. Instead, we aim to secure these specific near-memory bottlenecks using **physical security measures**, such as switched-capacitor logic, to decouple the digital switching activity from the V_{DD} supply. This hybrid strategy allows the system to support a full neural network inference flow while targeting an aggregate area overhead of only $5\times$ the unprotected baseline.

III. Preliminary Results

As this work represents an ongoing development effort, the results presented herein reflect the functional verification and initial hardware synthesis of the core architectural components prior to full-system integration.

A. Algorithm-Level Verification

The mathematical viability of the hybrid masking approach was validated through high-level software modeling. Specifically, the **XNOR offset correction** methodology was implemented and tested via a Python-based verification script. Simulations confirm that the statistical offsets introduced by substituting standard AND-based multipliers with linear XNOR logic can be fully compensated during the near-memory Batch Normalization phase, ensuring the inference accuracy is not degraded.

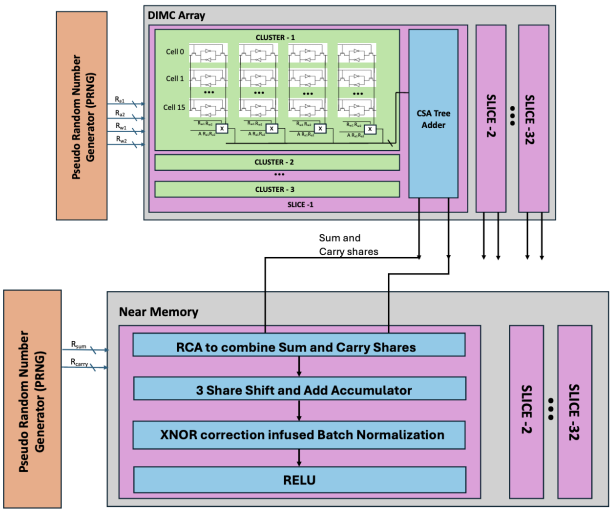

Fig. 3. Architecture of the secure DIMC core featuring 3-share Boolean masking, CSA tree integration, and XNOR-correction infused Batch Normalization.

B. Hardware Implementation and Synthesis

At the hardware level, the 3-share Carry Save Adder (CSA) tree for the DIMC array was implemented in Verilog HDL. To quantify the physical footprint of the linearized Boolean masking logic, the design was synthesized using a commercial standard cell library.

As detailed in Table I, the initial synthesis was targeted to a **TSMC 28nm HPC+** process node. The synthesis report confirms that the CSA tree is purely combinational, requiring 4,176 standard cells and occupying a total cell area of 3,063.56 μm^2. This preliminary area extraction establishes the physical baseline for the masked IMC logic, verifying that the linear partial-product summation does not trigger the exponential gate explosion characteristic of masked AND-operations.

TABLE I
PRELIMINARY SYNTHESIS RESULTS FOR 3-SHARE CSA TREE

Parameter	Value
Technology Node	TSMC 28nm HPC+
Total Cell Count	4,176
Combinational Cells	4,084
Buffer/Inverter Cells	324
Total Cell Area	**3063.56** μm^2

IV. DISCUSSION AND ONGOING WORK

The preliminary synthesis of the CSA tree (Table I) validates the core hypothesis of our methodology: linearizing the IMC math via XNOR gates bypasses the exponential area bloat of traditional masked multipliers. However, analyzing these results from a physical layout perspective reveals a critical constraint. Extending pure 3-share Boolean masking through the entire multi-bit accumulation phase would introduce severe pitch-matching issues with the memory array columns. The synthesized area confirms that while the Boolean partial-product generation is highly efficient, a strict architectural boundary must be drawn before final accumulation to maintain macro density and viable pitch sizing.

Consequently, ongoing work for the second half of the project is focused on the design and integration of a unified **Near-Memory Post-Processing Unit**. This peripheral module will aggregate the final multi-bit accumulation, the algorithmic XNOR offset correction, and the Batch Normalization layers into a single pipeline. Because applying Boolean masking to these additive and non-linear stages would violate our $5\times$ area constraint, the security of this post-processing unit relies entirely on **physical hardware countermeasures**.

By implementing specialized hardware security—such as switched-capacitor logic—at the near-memory boundary, we aim to decouple the digital switching activity from the main power supply. The ultimate objective is to guarantee **empirical security** for the entire inference pipeline. Future work will combine this physical layout data with the Project Aurora MLIR compiler to run standardized workloads (e.g., CIFAR-10) through comprehensive Correlation Power Analysis (CPA) simulations, thereby empirically proving the system's SCA resistance against the strict $5\times$ area target.

ACKNOWLEDGMENT

The authors would like to thank Professor Kaiyuan Yang and the Secure and Intelligent Micro-Systems (SIMS) Lab, as well as the Department of Electrical and Computer Engineering at Rice University, for their ongoing guidance and support.

CREDIT AUTHOR STATEMENT

Ajay Sabareesh Balamurugan: Conceptualization, Methodology, Software, Hardware, Validation, Formal Analysis, Investigation, Writing - Original Draft, Writing - Review & Editing.

REFERENCES

[1] M. Ashok, S. Maji, X. Zhang, J. Cohn, and A. P. Chandrakasan, "A Secure Digital In-Memory Compute (IMC) Macro with Protections for Side-Channel and Bus Probing Attacks," in *Proc. IEEE CICC*, 2024, pp. 1–2.

[2] T. Schneider, A. Moradi, and T. Güneysu, "Arithmetic Addition over Boolean Masking," in *Proc. ACNS*, Springer, 2015.

[3] D. Wang *et al.*, "DIMC: 2219TOPS/W 2569F^2/b digital in-memory computing macro in 28nm based on approximate arithmetic hardware," in *Proc. IEEE ISSCC*, 2022.

[4] S. Maji *et al.*, "A threshold implementation-based neural network accelerator with power and electromagnetic side-channel countermeasures," *IEEE J. Solid-State Circuits*, vol. 58, no. 1, pp. 141–154, 2022.

[5] L. Goubin, "A sound method for switching between boolean and arithmetic masking," in *Proc. CHES*, Springer, 2001.

[6] P. Sasdrich, B. Bilgin, M. Hutter, and M. E. Marson, "Low-latency hardware masking with application to AES," *IACR Trans. Cryptogr. Hardw. Embed. Syst.*, vol. 2020, no. 2, pp. 300–326, 2020.

[7] S. V. D. Kumar *et al.*, "Low-cost first-order secure Boolean masking in glitchy hardware," in *Proc. DATE*, 2023.