235113103 AKSHALLIYA JOICY A

BeegiveMonitoringPaperFinal2(edit)

III BCA A section

Document Details

Submission ID

trn:oid:::3618:114085185

Submission Date

Sep 24, 2025, 7:54 PM GMT+5:30

Download Date

Sep 25, 2025, 9:52 AM GMT+5:30

File Name

BeegiveMonitoringPaperFinal2(edit).pdf

File Size

1.1 MB

7 Pages

2,804 Words

16,156 Characters

30% Overall Similarity

The combined total of all matches, including overlapping sources, for each database.

Filtered from the Report

- Bibliography

Match Groups

42 Not Cited or Quoted 30%
Matches with neither in-text citation nor quotation marks

0 Missing Quotations 0%
Matches that are still very similar to source material

0 Missing Citation 0%
Matches that have quotation marks, but no in-text citation

0 Cited and Quoted 0%
Matches with in-text citation present, but no quotation marks

Top Sources

26% Internet sources
15% Publications
29% Submitted works (Student Papers)

Integrity Flags

0 Integrity Flags for Review

Our system's algorithms look deeply at a document for any inconsistencies that would set it apart from a normal submission. If we notice something strange, we flag it for you to review.

A Flag is not necessarily an indicator of a problem. However, we'd recommend you focus your attention there for further review.

Match Groups

- **42** Not Cited or Quoted 30%
  Matches with neither in-text citation nor quotation marks
- **0** Missing Quotations 0%
  Matches that are still very similar to source material
- **0** Missing Citation 0%
  Matches that have quotation marks, but no in-text citation
- **0** Cited and Quoted 0%
  Matches with in-text citation present, but no quotation marks

Top Sources

26% Internet sources
15% Publications
29% Submitted works (Student Papers)

Top Sources

The sources with the highest number of matches within the submission. Overlapping sources will not be displayed.

1	Internet	
sun-light.com.sg		6%
2	Internet	
www.ijert.org		5%
3	Internet	
ijraset.com		2%
4	Internet	
repo.ust.edu.sd:8080		2%
5	Student papers	
University of Lay Adventists of Kigali on 2025-02-04		1%
6	Internet	
ebin.pub		1%
7	Student papers	
Informatics Education Limited on 2018-10-29		1%
8	Internet	
fastercapital.com		1%
9	Publication	
S Monish, Dr.K.Radhika, S Naveenkumar, R Ponkumar. "Design and Implementa...		1%
10	Internet	
repository.president.ac.id		1%

11 Student papers

Arab Open University on 2019-04-28 <1%

12 Student papers

Management Development Institute Of Singapore on 2025-06-15 <1%

13 Internet

idoc.pub <1%

14 Student papers

Sreenidhi International School on 2017-05-11 <1%

15 Student papers

Kumasi Polytechnic on 2025-09-15 <1%

16 Student papers

Madanapalle Institute of Technology and Science on 2014-05-03 <1%

17 Student papers

Meenakshi Academy of Higher Education and Research on 2024-07-30 <1%

18 Publication

Shankar Babu, Mahesh Babu Kota. "Synergies in Smart and Virtual Systems using... <1%

19 Publication

Bhaveshkumar Nandanram Pasi, Subhash K. Mahajan, Santosh B. Rane. "The curr... <1%

20 Student papers

National Institute of Technology Delhi on 2016-05-12 <1%

21 Student papers

Kingston University on 2021-01-13 <1%

22 Student papers

PSG Institute of Management Coimbatore on 2021-10-12 <1%

23 Internet

ijireeice.com <1%

24 Publication

Mohammad Ayoub Khan, Sanjay Gairola, Bhola Jha, Pushkar Praveen. "Smart Co... <1%

25 Internet

www.scribd.com <1%

26 Internet

ijarse.com <1%

27 Student papers

Management Development Institute Of Singapore on 2024-06-02 <1%

28 Student papers

National University of Ireland, Maynooth on 2009-04-09 <1%

29 Student papers

Sreenidhi International School on 2023-06-03 <1%

Beehive Monitoring System

Abstract : The Beehive Monitoring System using IoT is created to maintain bee colonies safely and healthily by tracking environmental conditions inside and around the hive. The system mainly measures hive temperature and rain status through sensors connected to an Arduino Uno microcontroller. The data collected is sent to a cloud platform using a Wi-Fi module, allowing for real-time monitoring and remote access through IoT. If the hive temperature exceeds a certain level, a DC fan turns on automatically to control the internal environment and protect the bees. Rain detection also offers early alerts to help safeguard the hive structure. This smart system reduces the need for manual checking, ensures quick responses during bad weather, and helps enhance bee health, honey production, and sustainable beekeeping practices. By combining IoT with automated controls, this project provides an affordable and scalable option for modern beekeepers, promoting both environmental stability and agricultural efficiency.

Keywords: Beehive Monitoring System, Internet of Things (IoT), Arduino Uno, apiculture.

1. INTRODUCTION

Beekeeping, also called apiculture, is one of the oldest farming practices. It plays a crucial role in keeping the ecosystem balanced and supporting food production worldwide. Honeybees naturally pollinate plants, and their work extends far beyond producing honey. They are responsible for pollinating fruits, vegetables, and a variety of crops, which helps boost agricultural yield and biodiversity. However, in recent decades, beekeepers have faced many challenges, including climate change, poor hive management, pest problems, and shrinking bee populations due to Colony Collapse Disorder (CCD). One major concern for beekeepers is that they cannot continuously monitor the conditions inside the hive. This lack of monitoring directly impacts the health and productivity of the bee colony. Traditional hive inspections require manual checks, which can be time-consuming, labor-intensive, and sometimes harmful to the bees due to frequent interruptions.

New technologies like the Internet of Things (IoT), cloud computing, and automation have created new chances for smart solutions in farming and beekeeping. IoT-based monitoring systems enable real-time data collection, remote monitoring, and automated decision-making to improve efficiency and sustainability. In this context, the Beehive Monitoring System, using IoT, has been designed to track essential environmental factors like temperature and rainfall. It can also provide automatic responses, such as activating a fan when the hive temperature goes above safe levels.

II. LITERATURE SURVEY

2018, Sharma et al. developed an IoT-based system to monitor hive temperature and humidity using Arduino and GSM modules. The system collected data from the hive and sent it to mobile phones through SMS alerts. This allowed beekeepers to track environmental conditions remotely without often opening the hives. However, the system did not offer real-time cloud integration or automation. While it improved manual monitoring, it lacked active response mechanisms like fans or heaters. Our project addresses this gap by enabling automatic temperature control and IoT cloud connectivity.

2019, Li et al. explored wireless sensor networks (WSNs) to gather hive data such as temperature, sound, and hive activity. They deployed multiple sensor nodes inside the hive, with data sent to a base station for analysis. This system highlighted the importance of wireless communication in continuous monitoring. The drawback was high energy consumption and complex node synchronization, which increased maintenance costs. Our system simplifies the design by using Arduino Uno and a Wi-Fi module for reliable, cost-effective monitoring.

2020, Patel et al. proposed a cloud-based solution where hive data, such as temperature and humidity, was uploaded to an IoT platform. Beekeepers could log into a web dashboard and analyze trends over time. The system showed the

advantages of cloud data storage for decision-making. Although effective in data visualization, it lacked immediate control actions. In contrast, our project integrates automatic DC fan operation to regulate hive temperature, providing both monitoring and preventive control.

2017, Kulyukin et al. introduced a hive monitoring system using weight sensors to measure honey production. They recorded weight variations and transmitted them via GSM modules to track colony productivity. This approach emphasized the importance of monitoring yield in beekeeping. However, the system focused only on productivity and ignored hive health. Environmental factors like temperature and rainfall were not considered. Our project broadens the scope by including temperature regulation and rain detection, essential for protecting the colony.

2021, the European Journal of Agriculture Tech reviewed the use of IoT devices in precision beekeeping, showcasing innovations like RFID tracking of bees, GPS hive tracking, and smart hive sensors. It demonstrated how IoT can help reduce colony collapse and support sustainable beekeeping. While the paper presented advanced technologies, many solutions were costly and challenging for small-scale farmers to adopt. Our system emphasizes affordability through low-cost Arduino and Wi-Fi modules.

2016, Lopez et al. worked on a hive temperature regulation system using temperature sensors and fans. When the hive temperature exceeded a threshold, a fan was activated to cool it down. This was among the early attempts at automated hive regulation. The limitation was its lack of connection to IoT platforms, providing only local automation. Our project combines this automation with IoT monitoring, allowing remote supervision and control.

2019, Kumar & Singh developed an IoT-based rain detection system for crop fields. They used a rain sensor connected to Arduino to control irrigation automatically. The concept of using a rain sensor for smart farming proved reliable. Although designed for agriculture, the idea of rain sensing is highly relevant to hive monitoring. Our project adapts this concept to alert beekeepers and protect hives from rain damage.

2015, George et al. implemented a GSM-based hive monitoring solution, allowing beekeepers to receive SMS alerts about hive conditions. This approach was simple and effective in areas without internet access. However, the system lacked scalability and real-time dashboards. Our system uses IoT and Wi-Fi connectivity for continuous monitoring with cloud data storage.

2020, Reddy et al. built an Arduino-based IoT system to monitor soil moisture, humidity, and temperature for smart irrigation. They sent data to the cloud and activated pumps automatically when necessary. This demonstrated the effectiveness of Arduino and IoT in automating agricultural tasks. Our project follows a similar principle of combining monitoring and automation but focuses on beekeeping. Instead of pumps, we control a DC fan to regulate hive conditions.

2022, the Journal of Smart Farming analyzed multiple IoT-based hive monitoring projects around the world. It highlighted common parameters like temperature, humidity, weight, and sound. The study concluded that IoT helps reduce colony losses, but most solutions were not cost-effective for small farmers. Our project directly addresses this issue by designing a simple, low-cost, and scalable IoT-based hive monitoring system with automatic control..

III. SYSTEM BLOCK DIAGRAM

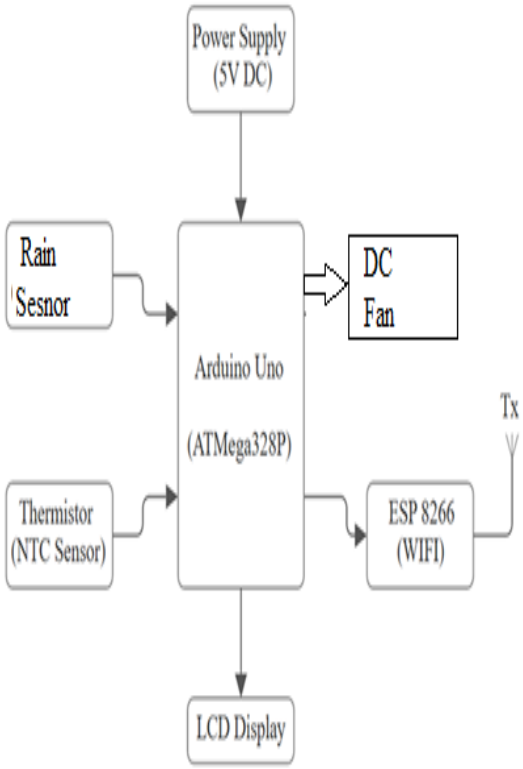

The alternating current (AC) voltage, usually at 220V root mean square (rms), connects to a transformer. The transformer reduces the AC voltage to the desired direct current (DC) output level. A diode rectifier converts this AC voltage into full-wave rectified voltage. A simple capacitor filter then smooths out the voltage to produce a DC output. However, this DC voltage typically has some ripple, which means it has little AC voltage variations. A regulator circuit eliminates these ripples and keeps the DC value stable, even if the input DC voltage changes or the load varies. Voltage regulation is often achieved with popular voltage regulator integrated circuits (ICs).

A.EXISTING SYSTEM

Traditional beehive management depends mainly on manual inspections by beekeepers. In most cases, beekeepers physically open the hives to check the conditions, such as brood development, honey storage, and cleanliness. This method, while effective for centuries, is labor-heavy, time-consuming, and stressful for the bees. Frequent disturbances to the hive can harm colony health, lower honey production, and increase the likelihood of bee aggression.

B. PROPOSED SYSTEM

The proposed system is an IoT-based Beehive Monitoring System that constantly tracks important environmental conditions in the hive and provides automatic responses when needed. The system is centered around an Arduino Uno microcontroller, which serves as the main control unit. Sensors measure the temperature inside the hive and detect rain outside. These readings are sent via a Wi-Fi module to an IoT cloud platform. This setup allows beekeepers to access the data remotely through smartphones or computers in real time.

A key feature of the proposed system is its automatic temperature control mechanism. When the hive temperature goes above a set threshold, the Arduino turns on a DC fan to cool the hive. This keeps the bees within their preferred temperature range (32–36°C) without needing any manual help. Likewise, when rain is detected, the system sends alerts to the beekeeper to protect the hive from water damage.

The proposed system aims to be affordable, simple, and scalable, making it accessible for small-scale and rural beekeepers. Unlike traditional monitoring systems that merely provide notifications, this solution combines real-time monitoring with automatic control actions to reduce risks and safeguard colony health.

C. HARDWARE DESCRIPTION

Arduino Uno:

The Arduino/Genuino Uno is a microcontroller board built on the ATmega328P. It features 14 digital input/output pins (6 of which can act as PWM outputs), 6 analog inputs, a 16 MHz quartz crystal, a USB connection, a power jack, an ICSP header, and a reset button. It comes ready to support the microcontroller; simply connect it to a computer with a USB cable or use an AC-to-DC adapter or battery to start. You can experiment with your UNO without much concern about making mistakes. If something goes wrong, you can replace the chip for a few dollars and begin again.

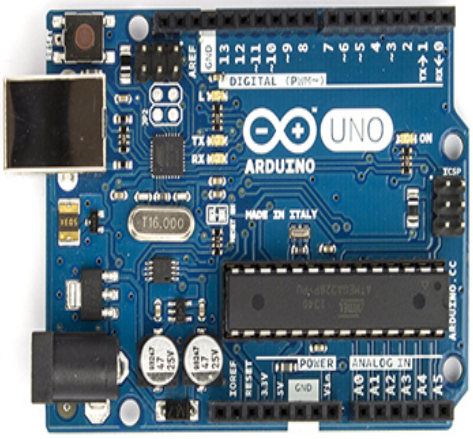

Power

You can power the board from the USB or an external source. The board automatically selects the power source. External power can come from an AC-to-DC adapter (wall-wart) or a battery. To use an adapter, plug a 2.1mm center-positive plug into the power jack on the board. You can connect battery leads to the GND and Vin pin headers of the POWER connector.

Memory

The ATmega328 has 32 KB of memory, with 0.5 KB used by the bootloader. It includes 2 KB of SRAM and 1 KB of EEPROM, which you can read and write to using the EEPROM library.

Input and Output

Check the mapping of Arduino pins to ATmega328P ports. The pin mapping for the Atmega8, 168, and 328 is the same. You can use all 14 digital pins in the Uno as either input or output with the pinMode(), digitalWrite(), and digitalRead() functions. They operate at 5 volts. Each pin can supply or drain 20 mA under recommended conditions and has an internal pull-up resistor (default is disconnected) of 20-50k ohm. You should never exceed a maximum of 40 mA on any I/O pin to avoid damaging the microcontroller permanently.

Communication

The Arduino/Genuino Uno provides several options for communication with a computer, another Arduino/Genuino board, or other microcontrollers. The ATmega328 has UART TTL (5V) serial communication on digital pins 0 (TX) and 1 (RX). An ATmega16U2 on the board handles this serial communication over USB and appears as a virtual com port on the computer. The 16U2 uses standard USB COM drivers, eliminating the need for external drivers.

Automatic (Software) Reset

Instead of needing to press the reset button before an upload, the Arduino/Genuino Uno has a setup that allows software on the connected computer to reset it. One of the hardware flow control lines (DTR) from the ATmega8U2/16U2 connects to the reset line of the ATmega328 through a 100 nanofarad capacitor. When this line goes low, the reset line drops long enough to reset the chip.

Revisions

Revision 3 of the board includes new features: 1.0 pinout, which adds SDA and SCL pins near the AREF pin and two new pins close to the RESET pin. The IOREF pin allows shields to adapt to the voltage supplied by the board. Future shields will work with both the 5V AVR boards and the 3.3V Arduino Due. The second pin is unconnected and reserved for future use.

LCD DISPLAY:

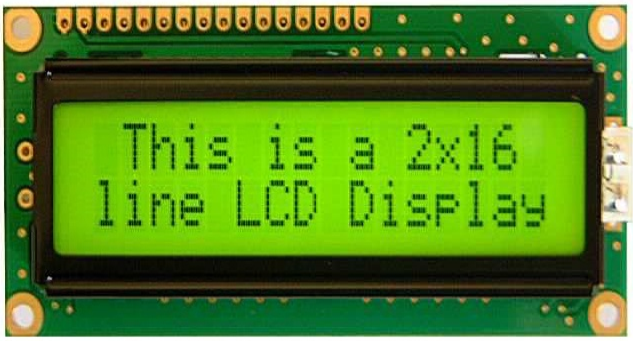

A liquid crystal display (LCD) is a flat, thin electronic visual display that uses the light-modulating properties of liquid crystals (LCs). LCs do not emit light themselves. They are found in various applications such as computer monitors, TVs, instrument panels, aircraft cockpit displays, and signage. They are common in consumer products like video players, gaming equipment, clocks, watches, calculators, and telephones. LCDs have mostly replaced cathode ray tube (CRT) displays.

INTERNET OF THINGS (IOT):

The Internet of Things (IoT) is a network of physical devices, vehicles, home appliances, and other items embedded with sensors, software, and electronics, allowing them to connect and share data.

IoT expands internet connectivity beyond standard devices like desktops, laptops, smartphones, and tablets to non-internet devices and everyday objects. Enabled by technology, these items can communicate and interact over the Internet. They can also be monitored and controlled remotely. The rise of driverless cars has led to increased interest in a sub-segment of IoT called the Internet of Vehicles.

The definition of IoT has evolved with the convergence of several technologies, including real-time analytics, machine learning, commodity sensors, and embedded systems. Traditional fields like embedded systems, wireless sensor networks, control systems, and home automation now all support the growth of IoT.

The term "Internet of Things" was likely first used by Kevin Ashton of Procter & Gamble, later MIT's Auto-ID Center, in 1999. He preferred to say "Internet for things" and viewed Radio-frequency identification (RFID) as key to IoT, enabling computers to manage individual items.

APPLICATIONS

The wide range of applications for IoT devices is usually divided into consumer, commercial, industrial, and infrastructure categories.

SMART HOME

IoT devices contribute to the larger idea of home automation, which includes lighting, heating, cooling, media, and security systems. Long-term benefits may include energy savings by automatically turning off lights and electronics.

Medical and healthcare

The Internet of Medical Things, or the internet of health things, applies IoT for medical and health purposes, data collection, research, and monitoring. This smart healthcare approach has led to the creation of a digitized healthcare

system, linking available medical resources and healthcare service.

TEMPERATURE SENSOR:

A thermistor is a type of resistor that changes resistance with temperature. The name combines thermal and resistor. Thermistors are commonly used as inrush current limiters, temperature sensors, self-resetting overcurrent protectors, and self-regulating heating elements. Thermistors differ from resistance temperature detectors (RTD) because thermistors generally use ceramic or polymer materials, while RTDs use pure metals.

WIFI

Devices with Wi-Fi, such as personal computers, video game consoles, mobile phones, or digital audio players, can access the Internet within range of an Internet-connected wireless network. The area covered by one or more interconnected access points, known as hotspots, can range from a few rooms to many square miles. Wider area coverage can rely on a set of access points with overlapping reach. Successful Wi-Fi technology deployment has been implemented in wireless mesh networks in London, UK

IV. RESULTS

Applications

- Beekeeping Industry: Supports modern, tech-driven beekeeping for better honey production.
- Agriculture: Healthy bee colonies ensure effective pollination, which boosts crop yield and food security.
- Research Institutions: Useful for studying bee behavior, hive health, and the environmental impacts on colonies.
- Education & Training: Provides a practical IoT project for engineering and agricultural students.
- Small-Scale Farmers: Offers affordable and effective hive management tools for rural and semi-urban areas.
- Commercial Apiaries: Improves large-scale honey production efficiency through continuous monitoring.

Advantages

- Real-Time Monitoring: Hive temperature and rain condition updates are available through IoT cloud platforms.
- Automatic Regulation: A DC fan automatically turns on when temperatures exceed safe limits, maintaining stable hive conditions.
- Low-Price Solution: Manufactured with affordable parts like Arduino Uno, Wi-Fi modules, and basic sensors, making it accessible for small-scale farmers.
- Bee Colony Protection: Safeguards bee health, reduces colony stress, and improves honey quality and yield.
- Remote Accessibility: Beekeepers can check hive data anytime, anywhere, reducing the need for manual inspections.
- Scalable System: Future integration of additional parameters like humidity, hive weight, and sound monitoring is possible.

- Eco-Friendly: Promotes sustainable beekeeping and helps preserve bee populations, supporting biodiversity.

- Reduced Labor Effort: Lowers manual work and time spent supervising hives. .

V. CONCLUSION

The Beehive Monitoring System using IoT offers a practical, low-cost, and efficient solution to the challenges in modern beekeeping. By integrating sensors, Arduino Uno, and IoT connectivity, the system allows for real-time monitoring of hive conditions and automatic temperature regulation using a DC fan. This approach reduces manual work while ensuring bee health, colony survival, and better honey yield. Unlike existing systems that mainly focus on data collection, the proposed system combines monitoring with automated control and provides cloud-based access for remote supervision. Its scalability makes it suitable for both small-scale and commercial beekeepers. Additionally, by protecting bee colonies, the project supports sustainable agriculture, biodiversity preservation, and environmental balance. This project highlights the potential of IoT in agriculture and shows how affordable technology can greatly improve beekeeping practices. Future improvements like weight sensors, humidity detection, and predictive analytics can further enhance its effectiveness.