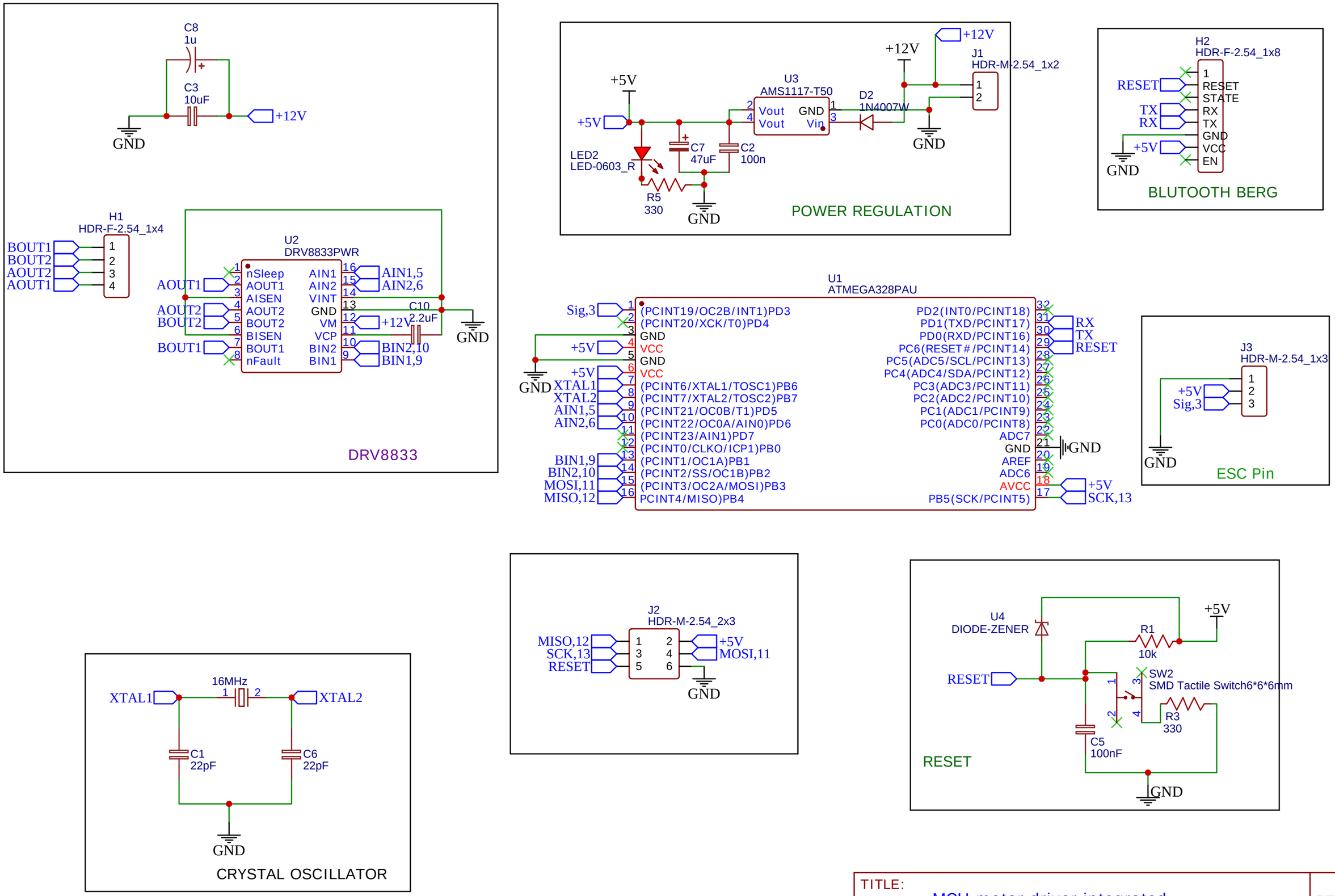

TITLE: MCU motor driver integrated	REV: 1.0
Company: Phiscape	Sheet: 1/1
Date: 2024-03-02 Drawn By: ajeshr	