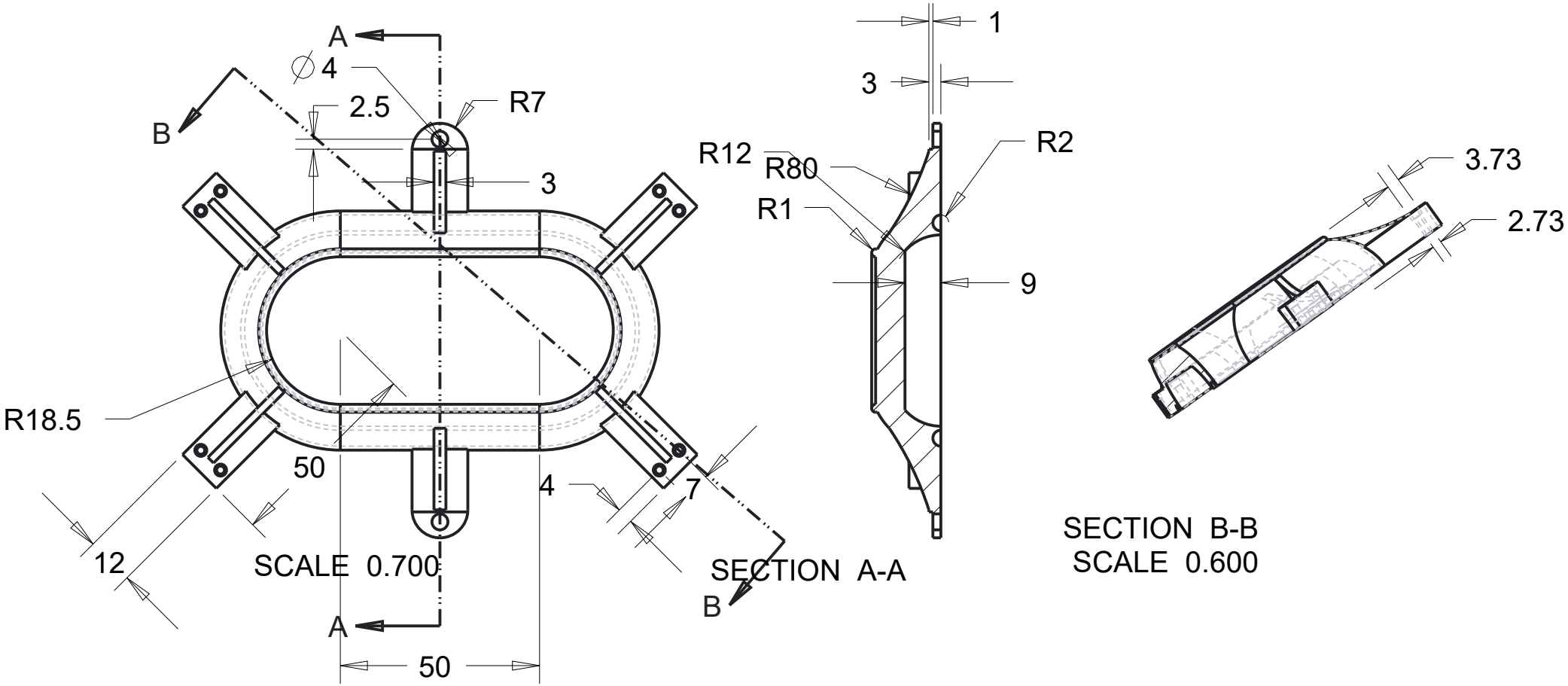
A
∅4
2.5
R7
B
3
R18.5
50
4
7
12
SCALE 0.700
A
50
1
3
R12
R80
R1
R2
9
SECTION A-A
B
3.73
2.73
SECTION B-B
SCALE 0.600