Quantum Series®

ENGINEERING

QUANTUM *Series*

B.Tech - 1st Year

Common to All Branches

Basic Electrical Engineering

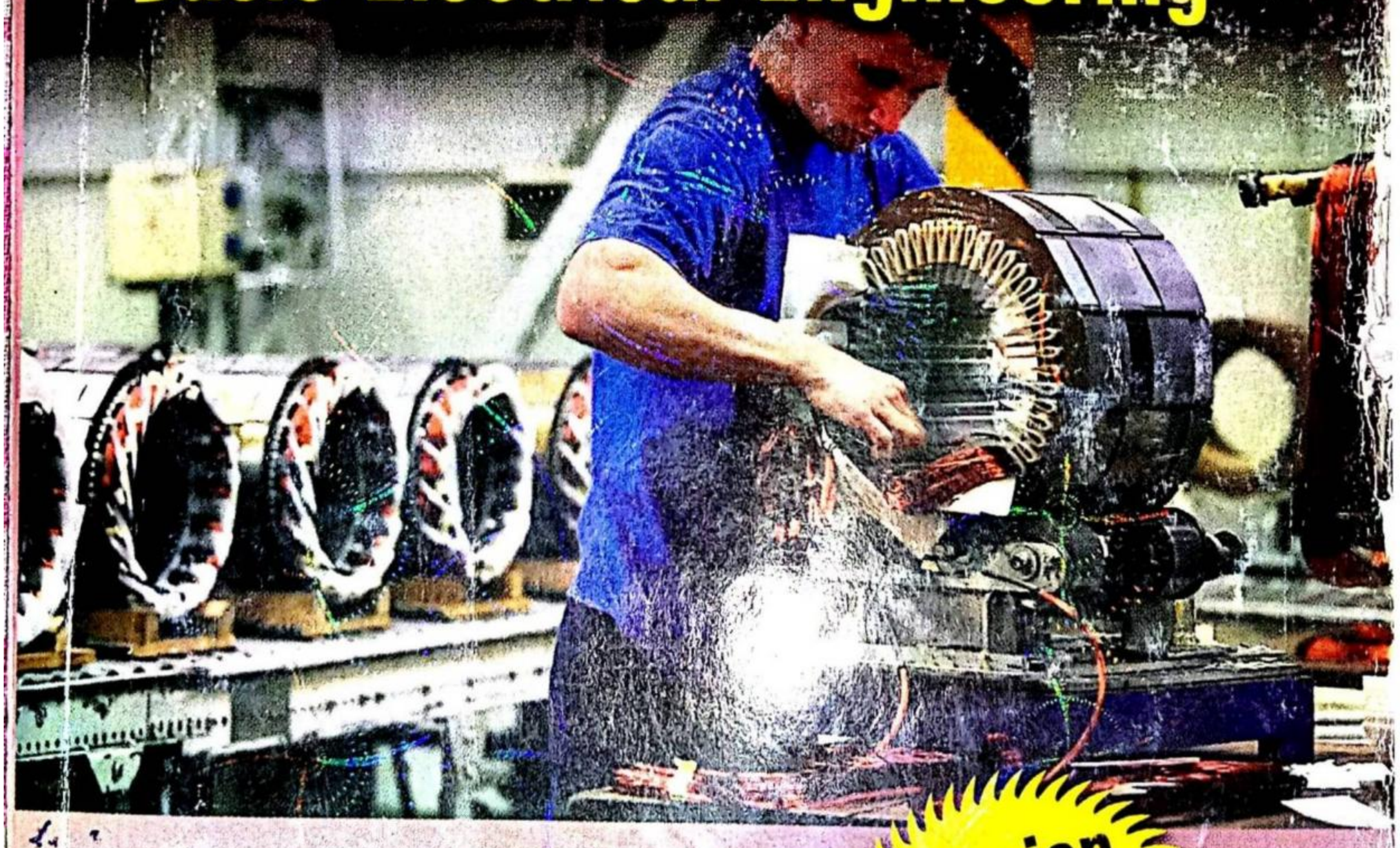

- Topic-wise coverage of entire syllabus in Question-Answer form.
- Short Questions (2 Marks)

Session 2019-20 Odd & Even Semester

Includes solution of following AKTU Question Papers (Odd & Even)
2013-14 • 2014-15 • 2015-16 • 2016-17 • 2017-18 • 2018-19

Scanned by TapScanner

www.askbooks.net

A.S.K.

Always.Seek.Knowledge

All AKTU QUANTUMS are available

- An initiative to provide free ebooks to students.
- Hub of educational books.

1. All the ebooks, study materials, notes available on this website are submitted by readers you can also donate ebooks/study materials.
2. We don't intend to infringe any copyrighted material.
3. If you have any issues with any material on this website you can kindly report us, we will remove it asap.
4. All the logos, trademarks belong to their respective owners.

QUANTUM SERIES

For

B.Tech Students of First Year
of All Engineering Colleges Affiliated to
Dr. A.P.J. Abdul Kalam Technical University,
Uttar Pradesh, Lucknow
(Formerly Uttar Pradesh Technical University)

Basic Electrical Engineering

By

Ashish Thombre

Quantum Page

QUANTUM PAGE PVT. LTD.
Ghaziabad ■ New Delhi

Scanned by TapScanner

PUBLISHED BY : **Apram Singh**
Quantum Publications®
(A Unit of Quantum Page Pvt. Ltd.)
Plot No. 59/2/7, Site - 4, Industrial Area,
Sahibabad, Ghaziabad-201 010

Phone : 0120 - 4160479

Email : pagequantum@gmail.com **Website: www.quantumpage.co.in**

Delhi Office : 1/6590, East Rohtas Nagar, Shahdara, Delhi-110032

© ALL RIGHTS RESERVED

No part of this publication may be reproduced or transmitted, in any form or by any means, without permission.

Information contained in this work is derived from sources believed to be reliable. Every effort has been made to ensure accuracy, however neither the publisher nor the authors guarantee the accuracy or completeness of any information published herein, and neither the publisher nor the authors shall be responsible for any errors, omissions, or damages arising out of use of this information.

Basic Electrical Engineering (Sem-1 & 2)

1st Edition : *2007-08*
2nd Edition : *2008-09*
3rd Edition : *2009-10*
4th Edition : *2010-11*
5th Edition : *2011-12*
6th Edition : *2012-13*
7th Edition : *2013-14*
8th Edition : *2014-15*
9th Edition : *2015-16*
10th Edition : *2016-17*
11th Edition : *2017-18*
12th Edition : *2018-19* (*Thoroughly Revised Edition*)
13th Edition : *2019-20*

Price: Rs. 125/- only

Printed at : Balajee Offset, Delhi.

Scanned by TapScanner

CONTENTS

KEE 101/201 : BASIC ELECTRICAL ENGINEERING

UNIT-1 : DC CIRCUITS **(1–1 D to 1–32 D)**

Electrical circuit elements (R, L and C), Concept of active and passive elements, voltage and current sources, concept of linearity and linear network, unilateral and bilateral elements, Kirchhoff's laws, Loop and nodal methods of analysis, Star-delta transformation, Superposition theorem, Thevenin theorem, Norton theorem.

UNIT-2 : STEADY-STATE ANALYSIS OF 1-Φ AC CIRCUITS **(2–1 D to 2–48 D)**

Representation of Sinusoidal waveforms – Average and effective values, Form and peak factors, Concept of phasors, phasor representation of sinusoidally varying voltage and current.
Analysis of single phase AC Circuits consisting of R, L, C, RL, RC, RLC combinations (Series and Parallel), Apparent, active & reactive power, Power factor, power factor improvement. Concept of Resonance in series & parallel circuits, bandwidth and quality factor. Three phase balanced circuits, voltage and current relations in star and delta connections.

UNIT-3 : TRANSFORMERS **(3–1 D to 3–24 D)**

Magnetic materials, BH characteristics, ideal and practical transformer, equivalent circuit, losses in transformers, regulation and efficiency. Auto transformer and three-phase transformer connections.

UNIT-4 : ELECTRICAL MACHINES **(4–1 D to 4–43 D)**

DC machines: Principle & Construction, Types, EMF equation of generator and torque equation of motor, applications of DC motors (simple numerical problems).
Three Phase Induction Motor: Principle & Construction, Types, Slip-torque characteristics, Applications (Numerical problems related to slip only)
Single Phase Induction motor: Principle of operation and introduction to methods of starting, applications.
Three Phase Synchronous Machines: Principle of operation of alternator and synchronous motor and their applications.

UNIT-5 : ELECTRICAL INSTALLATIONS **(5–1 D to 5–19 D)**

Components of LT Switchgear: Switch Fuse Unit (SFU), MCB, ELCB, MCCB, Types of Wires and Cables, Importance of earthing. Types of Batteries, Important characteristics for Batteries.Elementary calculations for energy consumption and savings, battery backup.

SHORT QUESTIONS **(SQ-1D to SQ-20D)**

SOLVED PAPERS (2013-14 TO 2018-19) **(SP-1D to SP-59D)**

Scanned by TapScanner

UNIT 1

DC Circuits

Part-1 ..... **(1–2D to 1–5D)**

- *Electrical Circuit Elements (R, L and C)*
- *Concept of Active and Passive Elements*
- *Voltage and Current Sources*
- *Concept of Linearity and Linear Network*
- *Unilateral Network and Bilateral Network*

A. Concept Outline : Part-1 ..... 1–2D
B. Long and Medium Answer Type Questions 1–2D

Part-2 ..... **(1–5D to 1–18D)**

- *Kirchhoff's Law*
- *Loop and Nodal Method of Analysis*
- *Star-Delta Transformation*

A. Concept Outline : Part-2 ..... 1–5D
B. Long and Medium Answer Type Questions 1–6D

Part-3 ..... **(1–18D to 1–32D)**

- *Superposition Theorem*
- *Thevenin's Theorem*
- *Norton's Theorem*

A. Concept Outline : Part-3 ..... 1–18D
B. Long and Medium Answer Type Questions 1–18D

PART-1

Electrical Circuit Elements (R, L and C), Concept of Active and Passive Elements, Voltage and Current Sources, Concept of Linearity and Linear Network, Unilateral Network and Bilateral Network

CONCEPT OUTLINE : PART-1

- **Active and passive elements :** A network that contains energy sources together with the circuit elements are known as active elements whereas network that does not contain energy sources together with circuit elements are known as passive elements.
- An electric circuit whose characteristics are same in either direction is called bilateral circuit e.g., resistors, inductors etc.
- An electric circuit whose characteristics change with the direction of its operation is called the unilateral circuit e.g., diode, transistors etc.

Questions-Answers

Long Answer Type and Medium Answer Type Questions

Que 1.1. **Define following :**

1. Resistance (*R*) 2. Capacitance (*C*) 3. Inductance (*L*).

Answer

1. **Resistance (*R*) :** A resistor is an electrical component that limits the current in circuit.

$$R = \frac{V}{I} \quad \text{...(1.1.1)}$$

2. **Capacitance (*C*) :** Capacitance is the ability to store energy. A capacitor converts the input electrical energy (*V*) into electrostatic energy (*Q*) as output.

$$C = \frac{Q}{V}$$

3. **Inductance (*L*) :** It is the property of an electrical conductor by which a change in electric current through it induces the electromotive voltage in conductor. An inductor converts electrical energy (*i*) into magnetic energy (ϕ).

$$L = \frac{\phi}{V}$$

Scanned by TapScanner

Define following :

1. **Active and passive elements**
2. **Linear circuits and non-linear circuits**
3. **Unilateral and bilateral elements**
4. **Passive and active network.**

i. Active and passive elements :

1. The elements which supply energy to the network are known as active elements.
2. The voltage sources like batteries, DC generator, AC generator and current sources like photoelectric cells, metadyne generators fall under the category of active elements.
3. The components which dissipate or store energy are known as passive components. Resistors, inductors and capacitors fall under the category of passive elements.

ii. Linear circuits and non-linear circuits :

1. Resistive elements for which the volt-ampere characteristic is a straight line are called linear, and the electric circuits containing only linear resistances are called linear circuits.
2. Resistive elements for which the volt-ampere characteristic is other than a straight line are termed as non-linear, and so the electric circuits containing them are called non-linear circuits.

iii. Unilateral and bilateral elements :

1. An electric circuit, whose characteristics or properties are same in either direction is called the bilateral circuit. Example : The distribution or transmission line can be made to perform its function equally well in either direction.
2. An electric circuit whose characteristics or properties change with the direction of its operation (e.g. a diode rectifier), is called the unilateral circuit.

iv. Passive network and active network :

1. A network is said to be passive if it contains no source of emf in it.
2. When a network contains one or more sources of emf and/or current, it is said to be active.

Que 1.3. Draw V-I characteristics of voltage and current sources.

Answer

1. V-I characteristics of voltage sources :

The volt-ampere characteristic is depicted in Fig. 1.3.1. Dotted line is for an ideal voltage source. Within a permissible range of a current a practical DC voltage source maintains the terminal voltage within a narrow range of its nominal range.

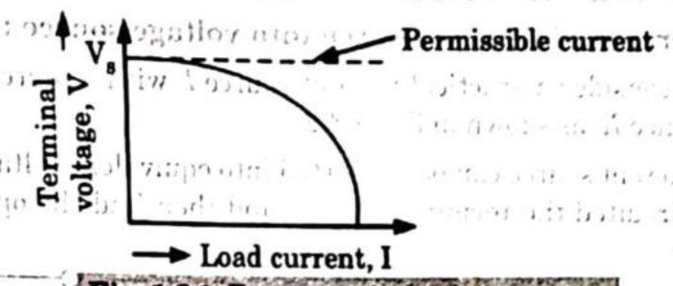

Fig. 1.3.1. For a practical voltage source.

2. V-I Characteristics of current source :

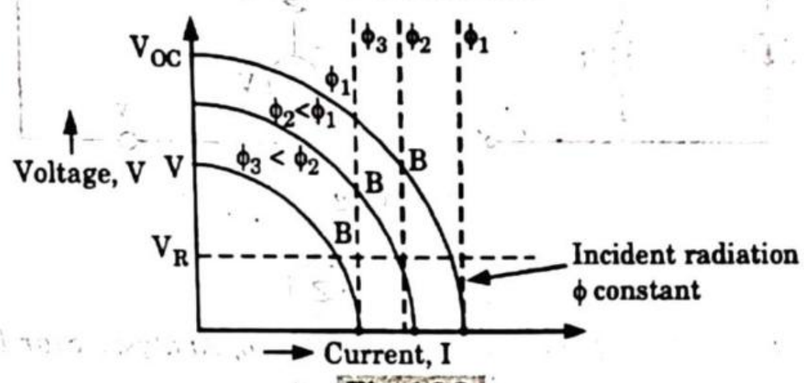

Fig. 1.3.2.

V-I characteristic of a practical current source is compared with that of ideal current source (dotted vertical lines). The limit V_R upto which a current source maintains the current is drawn by horizontal dotted line. Beyond this value of output voltage the current falls.

Que 1.4. Explain source transformation principle in circuit.

Answer

A. Conversion of voltage source into current source :

1. Let us consider a practical voltage source V_s with a source or internal resistance R_s as shown in Fig. 1.4.1.
2. The voltage source can be converted into equivalent current source by short circuiting the terminal xy and then find the current through xy short circuit path.

$$I_s = \frac{V_s}{R_s}$$

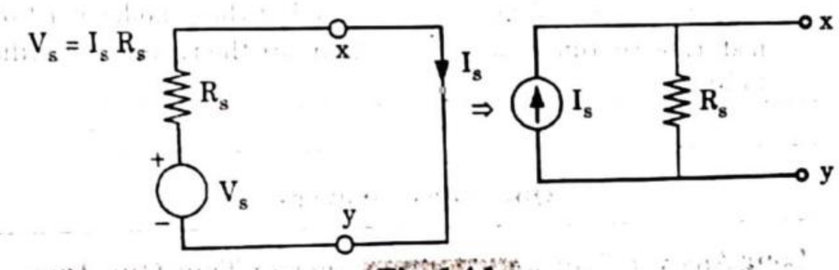

Fig. 1.4.1.

Scanned by TapScanner

B. Conversion of current source into voltage source :

1. Let us consider a practical current source I_s with a source or internal resistance R_s as shown in Fig. 1.4.2.
2. This current source can be converted into equivalent voltage source by open circuited the terminal voltage and then find the open circuited voltage.

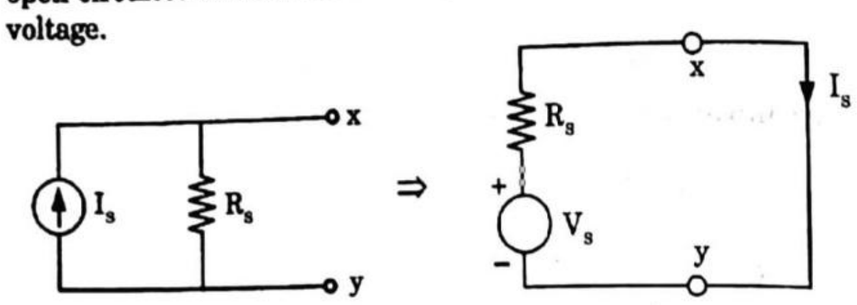

Fig. 1.4.2.

PART-2

Kirchhoff's Law, Loop and Nodal Method of Analysis, Star-Delta Transformation.

CONCEPT OUTLINE : PART-2

- **Kirchhoff's voltage law (KVL) :** This law states that the algebraic sum of voltage around any closed path is zero

$$\sum_{n=1}^{N} V_n = 0$$

where, V_n is the voltage in n^{th} element of a closed loop having n element.

- **Kirchhoff's current law (KCL) :** This law states that the algebraic sum of current entering the node is equal to zero.

i.e., $$\sum_{n=1}^{N} i_n = 0$$

where, i_n is the current in n^{th} branch.

- **Nodal analysis :** In this analysis independent nodes are considered and voltages are assumed at these nodes w.r.t one node called datum node. The equations are then framed according to KCL.

Questions-Answers

Long Answer Type and Medium Answer Type Questions

Que 1.5. **State and explain Kirchhoff's law. What are the limitations and applications of Kirchhoff's law in circuit theory? Explain.**

AKTU 2016-17(Sem-1), Marks 07

Answer

A. Kirchhoff's law : Refer Concept Outline : Part-2, Page 1–5D, Unit-1.

B. Limitations of Kirchhoff's law :

1. If more number of variables are present, then using these methods can be quite time consuming due to more number of equations.
2. KVL and KCL are not applied to distributed networks. Because in that case capacitance, inductance have their own internal resistances and are distributed over the long network line.

C. Applications of Kirchhoff's law :

1. The current distribution in various branches of the circuit is made with directions of their flow complying with first law of Kirchhoff (KCL).
2. Kirchhoff's second law (KVL) is applied to each mesh (one by one) separately and algebraic equations are obtained by equating the algebraic sum of emfs acting in each mesh equal to the algebraic sum of respective drop in same mesh.

Que 1.6. **Use source transformation method to compute the current through 6 Ω resistor of Fig. 1.6.1.**

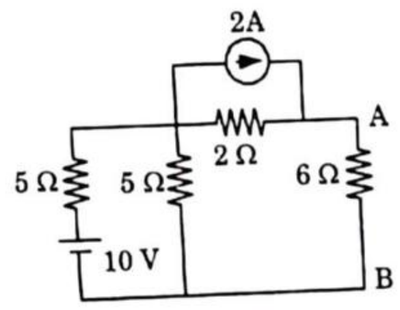

Fig. 1.6.1.

AKTU 2014-15(Sem-2), Marks 10

Answer

1. Changing the current source of 2 A to voltage source and voltage source of 10 V to current source.
2. Changing the voltage source of 10 V to current source,

Scanned by TapScanner

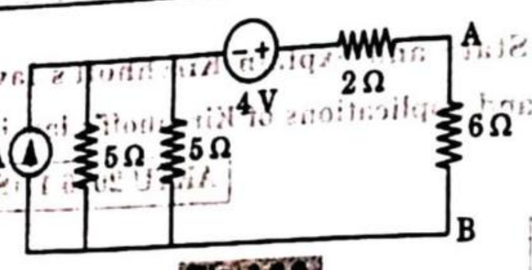

Fig. 1.6.2.

3. Using parallel combination of resistors,

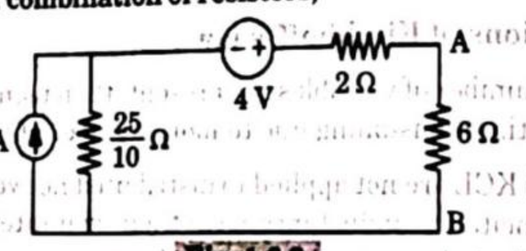

Fig. 1.6.3.

4. Changing current source of 2 A to voltage source,

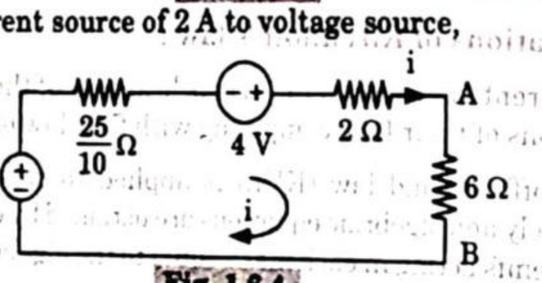

Fig. 1.6.4.

5. Applying mesh law, $5 - 2.5i + 4 - 2i - 6i = 0$

$$9 - 10.5\,i = 0$$

$$\therefore \quad i = \frac{9}{10.5} = 0.857 \text{ A}$$

Que 1.7. **Determine current in 4 ohm resistor by using mesh analysis in the circuit shown in Fig. 1.7.1 below.**

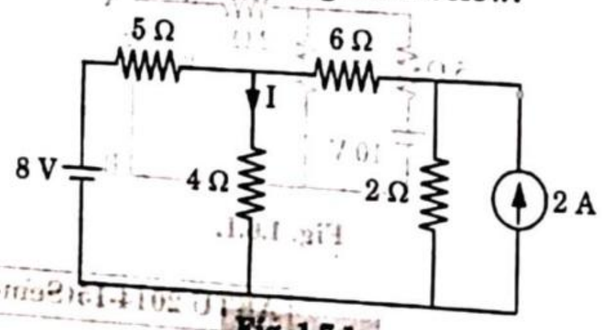

Fig. 1.7.1.

AKTU 2017-18(Sem-1), Marks 07

Answer

1. Converting 2 A current source with a parallel resistance of 2 Ω into an equivalent voltage source of 4 V in series with a 2 Ω resistance :

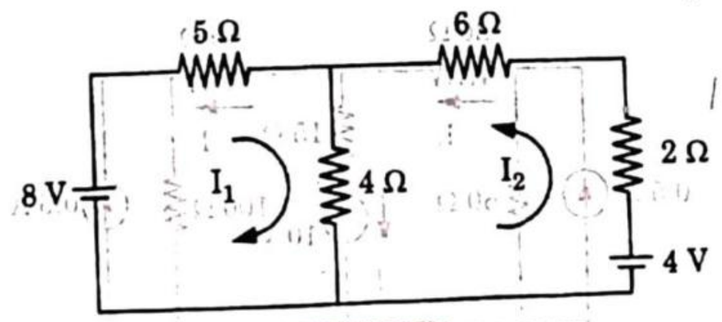

Fig. 1.7.2.

2. Applying Kirchhoff's voltage law to mesh I and II, we have

From mesh I :

$$8 - 5I_1 - 4(I_1 + I_2) = 0$$

$$9I_1 + 4I_2 = 8 \quad \text{...(1.7.1)}$$

From mesh II :

$$4 - 8I_2 - 4(I_2 + I_1) = 0$$

$$12I_2 + 4I_1 = 4$$

$$I_1 + 3I_2 = 1 \quad \text{...(1.7.2)}$$

3. Solving eq. (1.7.1) and (1.7.2), we get

$$I_2 = 0.04 \text{ A}$$

$$I_1 = 0.87 \text{ A}$$

4. Current across 4 Ω resistor,

$$I = I_1 + I_2$$

$$= 0.87 + 0.04 = 0.91 \text{ A}$$

Que 1.8. **Find current in 2 ohm resistance in the following Fig. 1.8.1 using loop analysis method.**

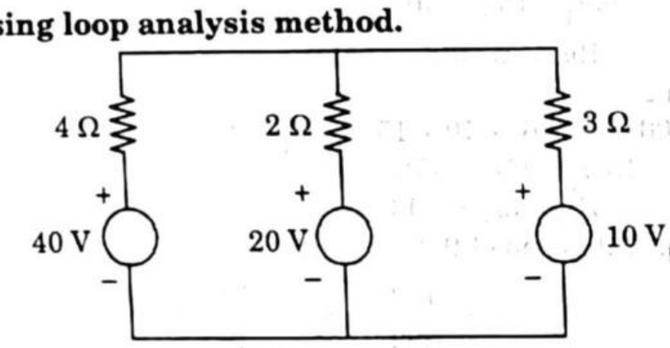

Fig. 1.8.1.

AKTU 2015-16(Sem-2), Marks 10

Answer

The procedure is same as Q. 1.7, Page 1–7D, Unit-1.

(**Ans.** Current in 2 Ω resistor = 0.77 A)

Que 1.9. **Using mesh analysis, find the currents I_1, I_2 and I_3 in the following circuit of Fig. 1.9.1.**

Scanned by TapScanner

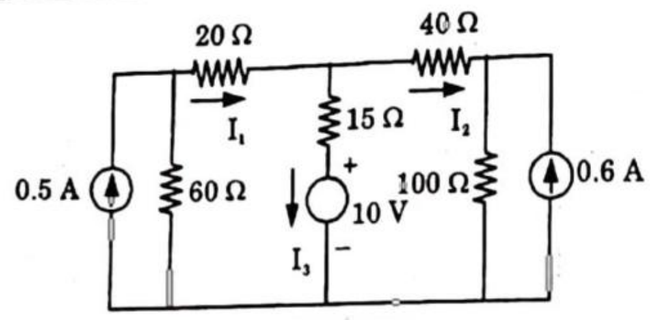

Fig. 1.9.1.

AKTU 2016-17(Sem-1), Marks 07

Answer

1. The equivalent circuit is

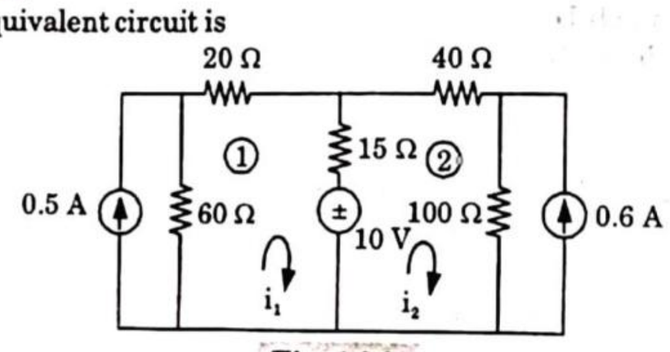

Fig. 1.9.2.

2. In mesh 1

$$20i_1 + 15(i_1 - i_2) - 10 + 60(i_1 - 0.5) = 0$$

$$95i_1 - 15i_2 = 40$$

$$19i_1 - 3i_2 = 8 \quad ...(1.9.1)$$

3. In mesh 2

$$40i_2 + 100(i_2 + 0.6) + 10 + 15(i_2 - i_1) = 0$$

$$155i_2 - 15i_1 = -70$$

$$31i_2 - 3i_1 = -14 \quad ...(1.9.2)$$

4. From eq. (1.9.1) and (1.9.2),

$$i_1 = \frac{103}{290} \text{ A}, i_2 = -\frac{121}{290} \text{ A}$$

5. Now, the current flowing through 20 Ω is I_1, hence

$$I_1 = i_1 = \frac{103}{290} = 0.355 \text{ A}$$

6. Current flowing through 40 Ω is I_2, hence

$$I_2 = i_2 = -\frac{121}{290} = -0.4127 \text{ A}$$

and current flowing through 15 Ω is I_3

$$I_3 = (i_1 - i_2) = \left(\frac{103 - (-121)}{290}\right) = \frac{224}{290} = 0.772 \text{ A}$$

Que 1.10. **Find current in each branch by using nodal analysis. Also calculate total power loss.**

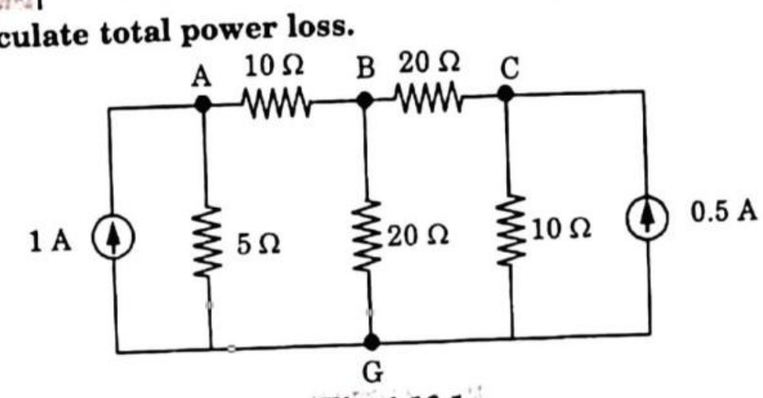

Fig. 1.10.1.

AKTU 2013-14(Sem-1), Marks 05

Answer

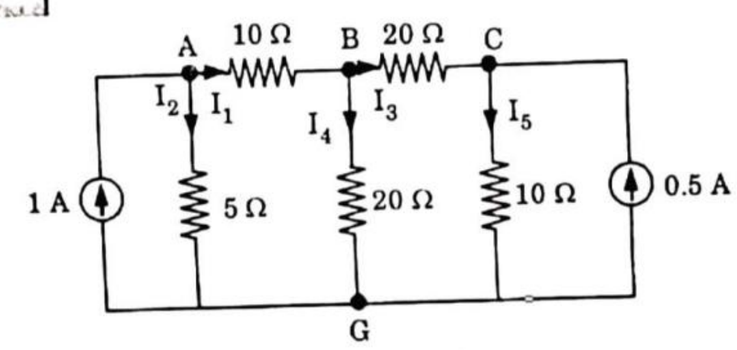

Fig. 1.10.2.

1. At node A, $1 = I_1 + I_2$

$$1 = \frac{V_A - V_B}{10} + \frac{V_A}{5}$$

$$3V_A - V_B = 10 \quad ...(1.10.1)$$

2. At node B, $I_1 = I_3 + I_4$

$$\frac{V_A - V_B}{10} = \frac{V_B - V_C}{20} + \frac{V_B}{20}$$

$$2V_A - 4V_B + V_C = 0 \quad ...(1.10.2)$$

3. At node C, $I_3 + 0.5 = I_5$

$$\frac{V_B - V_C}{20} + 0.5 = \frac{V_C}{10}$$

$$V_B - 3V_C = -10 \quad ...(1.10.3)$$

4. Solving eq. (1.10.1), (1.10.2) and (1.10.3), we get

$$V_A = 4.44; V_B = 3.33; V_C = 4.44$$

Scanned by TapScanner

5. **Value of currents are :**

$$I_2 = \frac{V_A}{5} = \frac{4.44}{5} = 0.888 \text{ A}$$

$$I_1 = \frac{V_A - V_B}{10} = 0.111 \text{ A}$$

$$I_3 = \frac{V_B - V_C}{20} = -0.055 \text{ A}$$

$$I_4 = \frac{V_B}{20} = 0.1665 \text{ A}$$

$$I_5 = \frac{V_C}{10} = 0.444 \text{ A}$$

6. **Total power loss** $= (0.111)^2 \times 10 + (0.888)^2 \times 5 + (-0.055)^2 \times 20 + (0.1665)^2 \times 20 + (0.444)^2 \times 10$

$= 6.65$ W

Que 1.11. **Using Nodal analysis find the current through 1 Ω resistance shown in Fig. 1.11.1.**

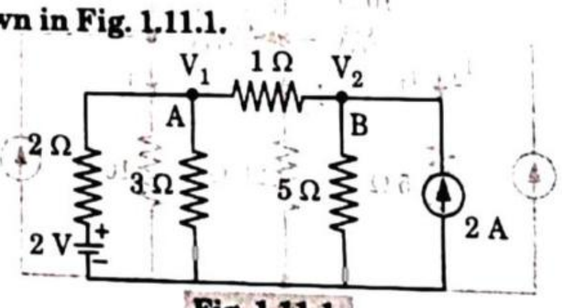

Fig. 1.11.1.

AKTU 2016-17(Sem-2), Marks 07

Answer

The procedure is same as Q. 1.10, Page 1–10D, Unit-1.

(Ans. Current through 1 Ω resistor = 1.22 A)

Que 1.12. **Using nodal analysis, find current through 8 Ω resistor.**

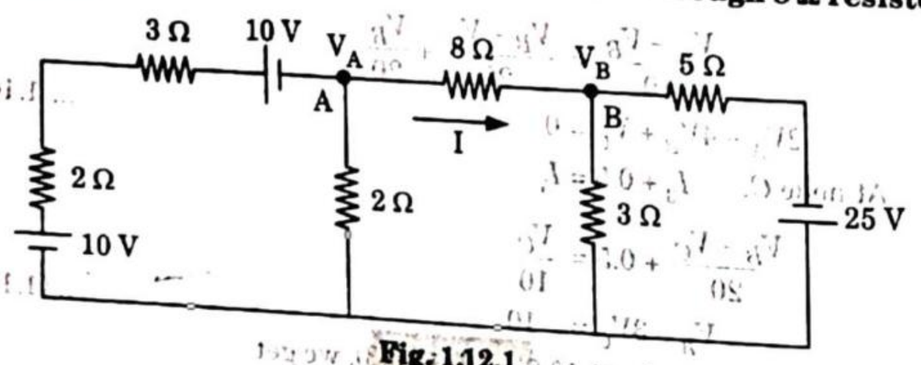

Fig. 1.12.1.

AKTU 2017-18(Sem-2), Marks 07

Answer

1. At node A, $\frac{V_A + 10 - 10}{5} + \frac{V_A - 0}{2} + \frac{V_A - V_B}{8} = 0$

$$8V_A + 20V_A + 5V_A - 5V_B = 0$$

$$33\,V_A = 5V_B$$

$$\therefore \quad V_A = \frac{5V_B}{33} \qquad \text{...(1.12.1)}$$

2. At node B, $\frac{V_B - V_A}{8} + \frac{V_B - 0}{3} + \frac{V_B + 25}{5} = 0$

$$15V_B - 15V_A + 40V_B + 24V_B + 600 = 0$$

$$79V_B - 15V_A = -600 \qquad \text{...(1.12.2)}$$

3. Putting value of V_A in eq. (1.12.2), we get

$$79V_B - \frac{75}{33}V_B = -600$$

$$\therefore \quad V_B = -7.82 \text{ V}$$

4. Putting value of V_B in eq. (1.12.1),

$$V_A = \frac{5}{33} \times -7.82 = -1.18 \text{ V}$$

5. Current through 8 Ω resistor

$$I = \frac{V_A - V_B}{8} = \frac{-1.18 + 7.82}{8} = 0.83 \text{ A}$$

Que 1.13. **Deduce delta connected system from star connected system.**

AKTU 2013-14(Sem-1), Marks 05

OR

Derive an expression of star to delta transformation and vice-versa.

AKTU 2013-14(Sem-2), Marks 10

OR

Derive the delta to star transformation.

AKTU 2014-15(Sem-2), Marks 05

OR

Derive the relation for star to delta and delta to star transformation.

AKTU 2017-18(Sem-1), Marks 07

Answer

A. Delta to star transformation :

1. Three resistances connected as shown in Fig. 1.13.1(*a*), are said to be delta connected.

Scanned by TapScanner

2. Three resistances connected together at a common point O, as shown in Fig. 1.13.1(*b*) are said to be star (Y) connected.
3. The replacement of delta or mesh by equivalent star system is known as delta to star transformation.
4. The two systems will be equivalent or identical if the resistance measured between any pair of lines is same in both of the systems, when the third line is open.

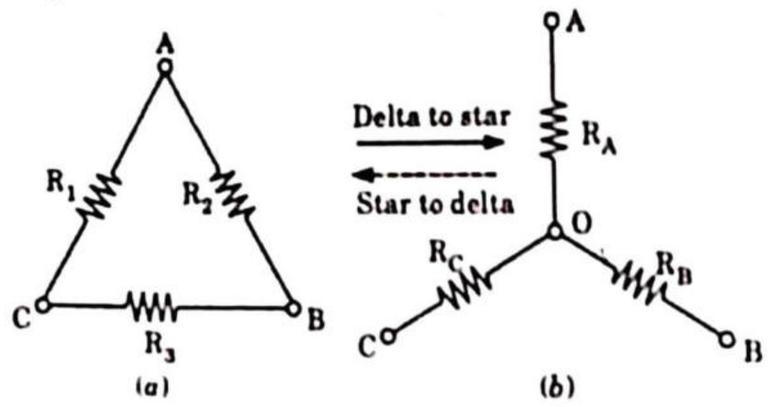

Fig. 1.13.1. Delta to star transformation.

5. Hence resistances between terminals B and C,

$$R_{BC} = R_3 \parallel (R_1 + R_2)$$

$$= \frac{R_3(R_1 + R_2)}{R_1 + R_2 + R_3} \text{ in delta system}$$

and $$R_{BC} = R_B + R_C \text{ in star system}$$

6. Since the two systems are identical, resistances measured between terminals B and C in both of the systems must be equal.

So $$R_B + R_C = \frac{R_3(R_1 + R_2)}{R_1 + R_2 + R_3} \quad ...(1.13.1)$$

7. Similarly resistances between terminals C and A being equal in the two systems

$$R_C + R_A = \frac{R_1(R_2 + R_3)}{R_1 + R_2 + R_3} \quad ...(1.13.2)$$

Similarly resistance between terminals A and B

$$R_A + R_B = \frac{R_2(R_1 + R_3)}{R_1 + R_2 + R_3} \quad ...(1.13.3)$$

8. Adding eq. (1.13.1), (1.13.2) and (1.13.3), we get

$$2(R_A + R_B + R_C) = \frac{2(R_1 R_3 + R_2 R_3 + R_1 R_2)}{R_1 + R_2 + R_3}$$

$$R_A + R_B + R_C = \frac{R_1 R_3 + R_2 R_3 + R_1 R_2}{R_1 + R_2 + R_3} \quad ...(1.13.4)$$

9. Subtracting eqs. (1.13.1), (1.13.2), (1.13.3) from (1.13.4) respectively, we have

$$R_A = \frac{R_1 R_2}{R_1 + R_2 + R_3} \quad ...(1.13.5)$$

$$R_B = \frac{R_2 R_3}{R_1 + R_2 + R_3} \quad ...(1.13.6)$$

$$R_C = \frac{R_3 R_1}{R_1 + R_2 + R_3} \quad ...(1.13.7)$$

B. Start to delta transformation :

1. Consider $Y - \Delta$ connections as shown in Fig. 1.13.2.

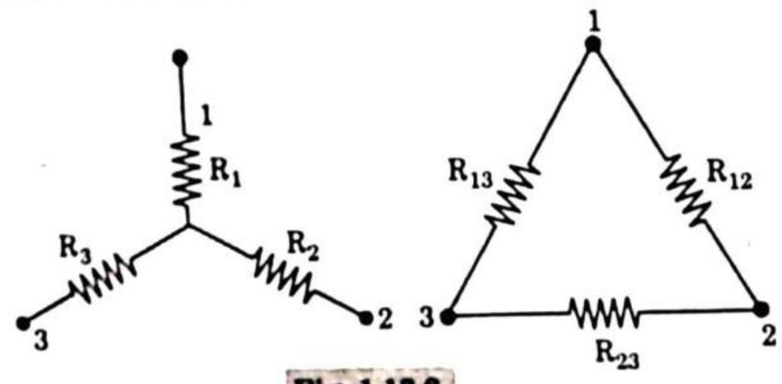

Fig. 1.13.2.

2. Resistance between terminals (1) and (2) in Y-connection is

$$R_{①-②} Y = R_1 + R_2 \quad ...(1.13.8)$$

3. Resistance between terminal 1 and 2 in Δ-connection is

$$R_{①-②} \Delta = R_{12} \parallel (R_{13} + R_{23}) = \frac{R_{12}(R_{13} + R_{23})}{R_{12} + R_{13} + R_{23}} \quad ...(1.13.9)$$

4. If the Y-connection drawn in Fig. 1.13.2 is equivalent to the Δ-connection, eq. (1.13.8) and (1.13.9) must be equal.

$$\therefore \quad R_1 + R_2 = \frac{R_{12}(R_{13} + R_{23})}{R_{12} + R_{13} + R_{23}} \quad ...(1.13.10)$$

5. Similarly, $$R_1 + R_3 = \frac{R_{13}(R_{12} + R_{23})}{R_{13} + R_{12} + R_{23}} \quad ...(1.13.11)$$

and $$R_2 + R_3 = \frac{R_{23}(R_{13} + R_{12})}{R_{12} + R_{23} + R_{13}} \quad ...(1.13.12)$$

6. Solving eqs. (1.13.10), (1.13.11) and (1.13.12)

$$R_{12} = R_1 + R_2 + \frac{R_1 R_2}{R_3}$$

$$R_{23} = R_2 + R_3 + \frac{R_2 R_3}{R_1}$$

$$R_{13} = R_1 + R_3 + \frac{R_1 R_3}{R_2}$$

Scanned by TapScanner

Que 1.14. **Using star-delta transformation, find the current in the branch bc of the circuit. Consider all the values of resistance are in ohms.**

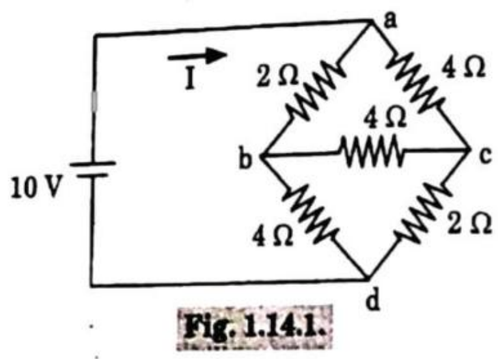

Fig. 1.14.1.

AKTU 2014-15(Sem-1), Marks 10

Answer

1. Applying delta to star transformation, we get Fig. 1.14.2.

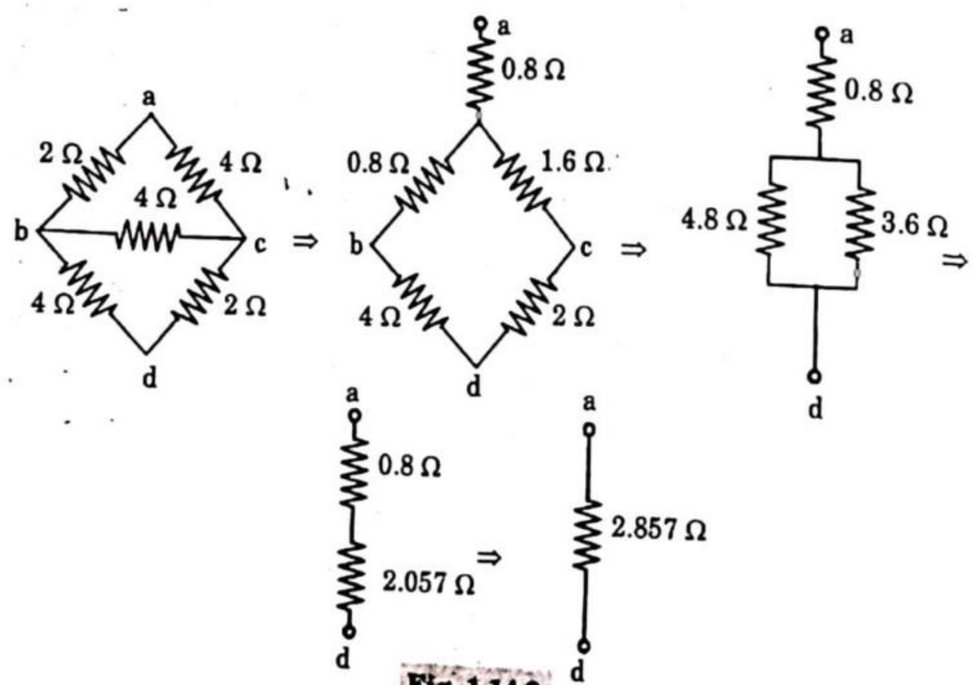

Fig. 1.14.2.

2. So
$$R_{eq} = 2.857\ \Omega$$
$$I = \frac{10}{2.857} = 3.5\ \text{A}$$

3. Taking *bc* branch open,

Current in section $abd = 3.5 \times \frac{6}{6+6} = 1.75$ A

Current in section $acd = 3.5 \times \frac{6}{6+6} = 1.75$ A

4. Voltage,
$$V_{bd} = 4 \times 1.75 = 7\ \text{V}$$
$$V_{cd} = 2 \times 1.75 = 3.5\ \text{V}$$

5. Current in branch *bc* $I_{bc} = \frac{7 - 3.5}{4} = 0.875$ A

Que 1.15. **Determine the effective resistance between terminals A-B in the network of Fig. 1.15.1.**

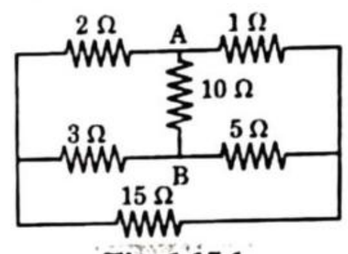

Fig. 1.15.1.

AKTU 2014-15(Sem-2), Marks 10

Answer

1. Converting delta to star,
$$R_1 = \frac{5 \times 3}{5+3+15} = \frac{15}{23}\ \Omega$$
$$R_2 = \frac{15 \times 3}{5+3+15} = \frac{45}{23}\ \Omega$$
$$R_3 = \frac{15 \times 5}{5+3+15} = \frac{75}{23}\ \Omega$$

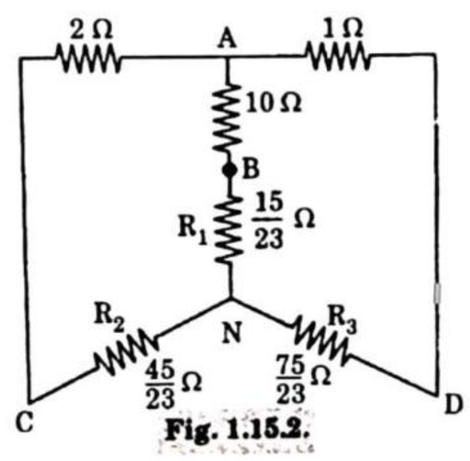

Fig. 1.15.2.

Scanned by TapScanner

2. Solving series circuit,

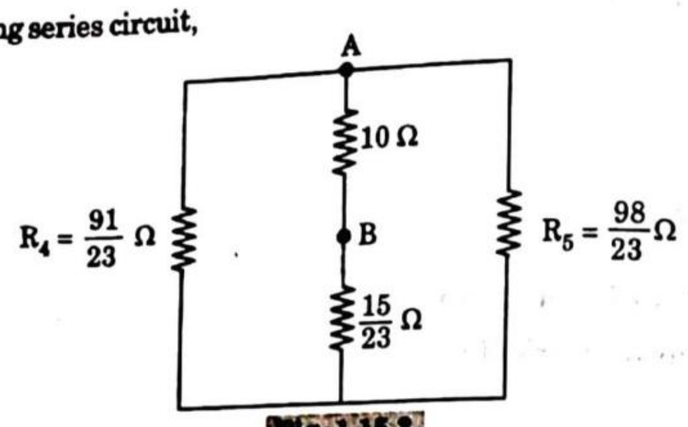

Fig. 1.15.3.

as
$$R_4 = 2 + \frac{45}{23} = \frac{91}{23}\,\Omega$$
$$R_5 = 1 + \frac{75}{23} = \frac{98}{23}\,\Omega$$

3. Solving circuit,

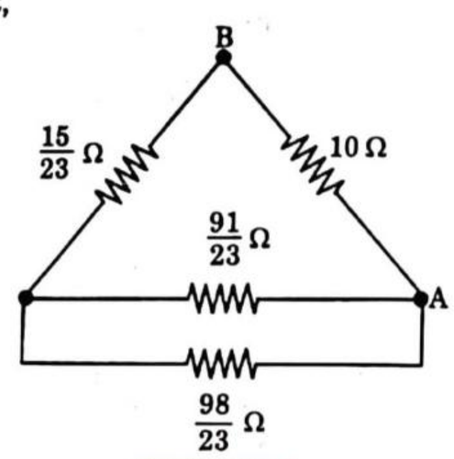

Fig. 1.15.4.

4. Solving parallel circuit,

as
$$R_6 = \frac{\frac{91}{23} \times \frac{98}{23}}{\frac{91}{23} + \frac{98}{23}} = 2.05\,\Omega$$

5. Equivalent resistance across AB is

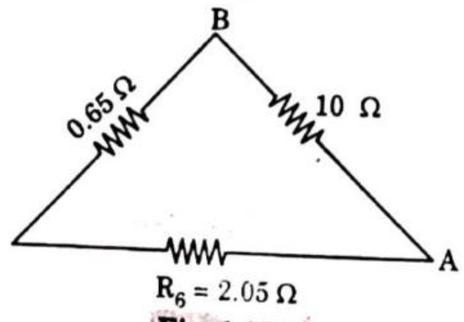

Fig. 1.15.5.

$$R_{AB} = \frac{10(0.65 + 2.05)}{10 + 0.65 + 2.05} = 2.12\,\Omega$$

PART-3

Superposition Theorem, Thevenin's Theorem, Norton's, Theorem.

CONCEPT OUTLINE : PART-3

There are four theorems to solve DC networks :
1. Superposition theorem
2. Thevenin's theorem
3. Norton's Theorem

Questions-Answers

Long Answer Type and Medium Answer Type Questions

Que 1.16. **Explain superposition theorem.**

Answer

A. Statement :

If a number of voltage or current sources are acting simultaneously in a linear network, the resultant current in any branch is the algebraic sum of the current that would be produced in it, when each source acts alone replacing all other independent sources by their internal resistances.

B. Explanation :

1. In Fig. 1.16.1(*a*), to apply superposition theorem, let us first take the source V_1 alone at first replacing V_2 by short circuit [Fig. 1.16.1(*b*)].

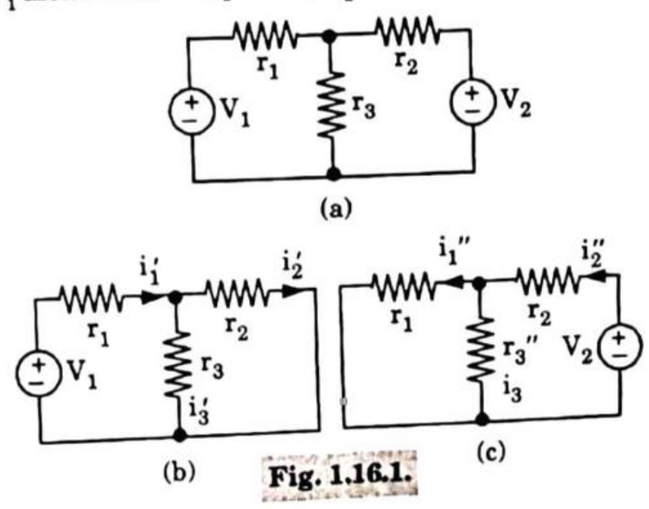

Fig. 1.16.1.

Scanned by TapScanner

2. Here, $$i_1' = \frac{V_1}{\frac{r_2 r_3}{r_2 + r_3} + r_1}$$

$$i_2' = i_1' \frac{r_3}{r_2 + r_3} \text{ and } i_3' = i_1' - i_2'$$

3. Next, replacing V_1 by short circuit. Let the circuit be energized by V_2 only [Fig. 1.16.1(c)]

Here, $$i_2'' = \frac{V_2}{\frac{r_1 r_3}{r_1 + r_3} + r_2} \text{ and } i_1'' = i_2'' \frac{r_3}{r_1 + r_3}$$

Also, $$i_3'' = i_2'' - i_1''$$

4. As per superposition theorem,

$$i_3 = i_3' + i_3''$$
$$i_2 = i_2' - i_2''$$
$$i_1 = i_1' - i_1''$$

Que 1.17. **Discuss Thevenin's theorem.**

Answer

A. Statement :

Any two terminal bilateral linear DC circuit can be replaced by an equivalent circuit consisting of a voltage source and a series resistor.

B. Explanation :

1. Let us consider a simple DC circuit as shown in Fig. 1.17.1(*a*). We are to find I_L by Thevenin's theorem.
2. In order to find the equivalent voltage source, r_L is removed [Fig. 1.17.1(*b*)] and V_{oc} is calculated

$$V_{oc} = I r_3 = \frac{V_S}{r_1 + r_3} r_3$$

3. Now, to find the internal resistance of the network (Thevenin's resistance or equipment resistance) in series with V_{oc}, the voltage source is removed by a short circuit as shown in Fig, 1.17.1(*c*)

$$R_{TH} = r_2 + \frac{r_1 r_3}{r_1 + r_3}$$

4. As per Thevenin's theorem, the equivalent circuit is shown in Fig. 1.17.1(*d*).

$$I_L = \frac{V_{oc}}{R_{TH} + r_L}$$

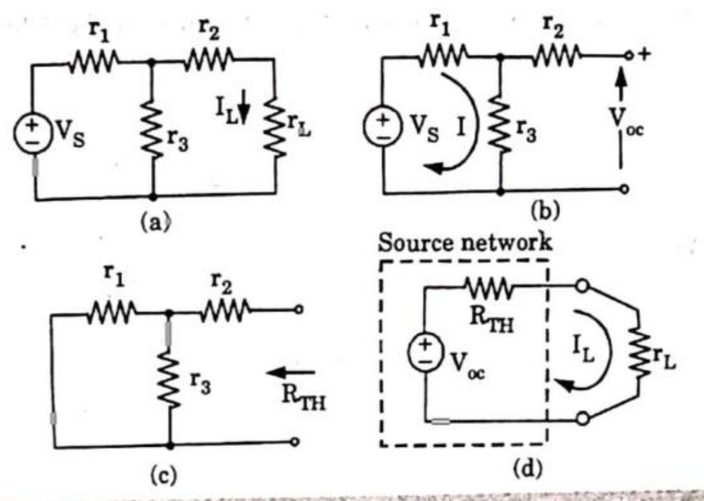

Fig. 1.17.1. (a) A simple DC circuit, (b) Finding of V_{oc} (c) Finding of R_{TH} (d) Finding of I_L, forming Thevenin's equivalent circuit.

Que 1.18. **Explain Norton's theorem.**

Answer

A. Statement : Any linear circuit containing several energy sources and resistances can be replaced by a single constant current generator in parallel with a single resistor.

B. Explanation :

1. In order to find the current through r_L, (Fig. 1.18.1), replace r_L by short circuit [Fig. 1.18.2].

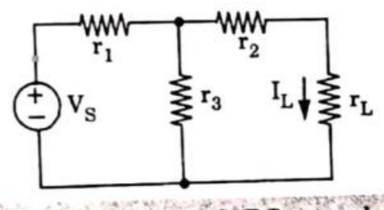

Fig. 1.18.1. A simple DC network.

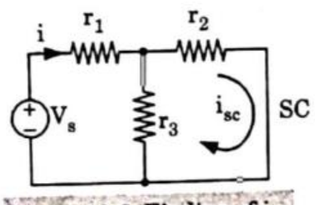

Fig. 1.18.2. Finding of i_{sc}

$$i = \frac{V_S}{r_1 + \frac{r_2 r_3}{r_2 + r_3}} \text{ and } i_{sc} = i \frac{r_3}{r_3 + r_2}$$

2. Now, the short circuit is removed and the independent source is deactivated [Fig. 1.18.3(*a*)].

$$R_{int} = r_2 + \frac{r_1 r_3}{r_1 + r_3}.$$

Scanned by CamScanner

Scanned by TapScanner

3. As per Norton's theorem, the equivalent circuit is drawn in Fig. 1.18.3(b).

$$I_L = i_{sc} \frac{R_{int}}{R_{int} + r_L}$$

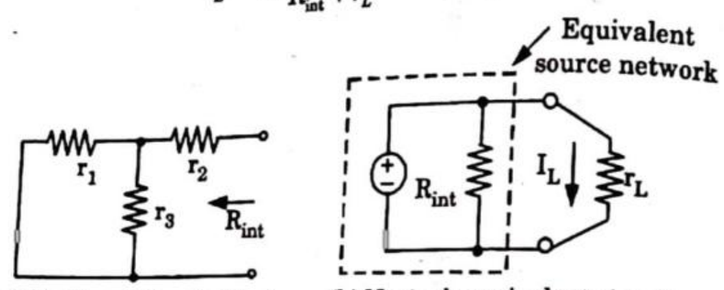

(a) Finding of R_{TH} (or R_{int}). (b) Norton's equivalent circuit.

Fig. 1.18.3.

Que 1.19. **Find V and I in the given circuit by using superposition theorem.**

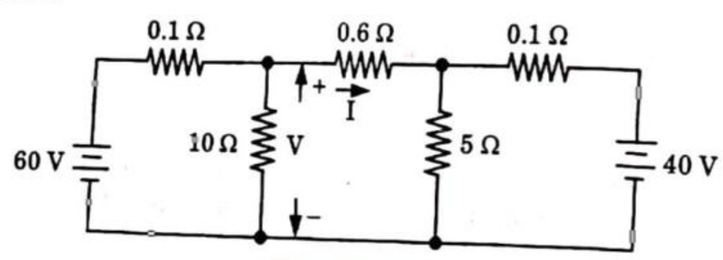

Fig. 1.19.1.

AKTU 2014-15(Sem-1), Marks 10

Answer

Step I : Activating 60 V and deactivating 40 V source

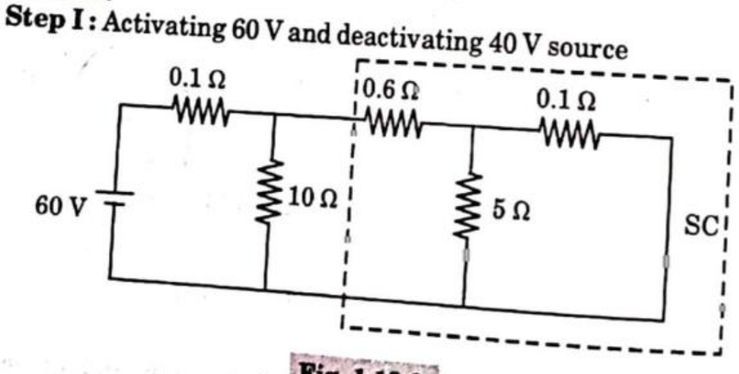

Fig. 1.19.2.

1. $$R_{eq}' = (0.1\ \Omega \parallel 5\ \Omega) + 0.6\ \Omega$$
$$= \frac{0.1 \times 5}{0.1 + 5} + 0.6$$
$$R_{eq}' = 0.698\ \Omega$$

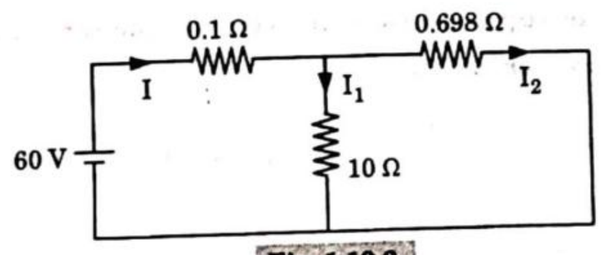

Fig. 1.19.3.

2. $$R_{eq} = (0.698\ \Omega \parallel 10\ \Omega) + 0.1\ \Omega$$
$$= \frac{0.698 \times 10}{0.698 + 10} + 0.1 = 0.752\ \Omega$$
$$R_{eq} \simeq 0.752$$

3. $$I = \frac{V}{R_{eq}} = \frac{60}{0.752} = 79.7347\ \text{A}$$

4. $$I_1 = 79.78 \times \frac{0.698}{0.698 + 10} = 5.20\ \text{A}$$

5. $$I_2 = 79.73 \times \frac{10}{(0.6 + 10)} = 75.73\ \text{A}$$

Step II : Activating 40 V and deactivating 60 V source

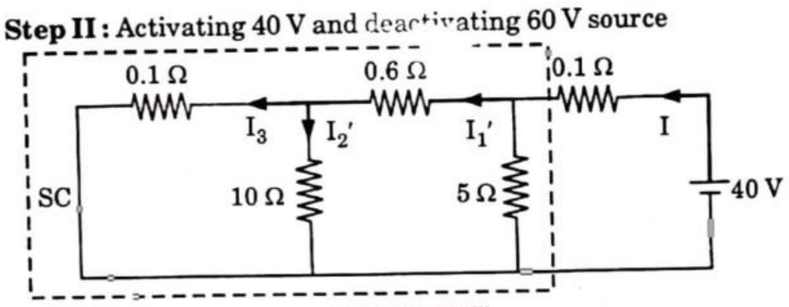

Fig. 1.19.4.

1. $$R_{eq} = 0.7132\ \Omega,\ I = \frac{40}{0.7132} = 56.085\ \text{A}$$

2. $$I_1' = 56.085 \times \frac{5}{5 + [(0.1 \parallel 10) + 0.6]}$$
$$= \frac{56.085 \times 5}{5.699} = 49.206\ \text{A}$$

3. $$I_2' = 49.206 \times \frac{0.1}{0.1 + 10} = 0.4871\ \text{A}$$

4. By superposition theorem current in 0.6 Ω resistor
$$I = I_2 - I_1' = 75.73 - 49.206$$
$$I = 26.52\ \text{A}$$

5. Voltage in 10 Ω resistor = (0.4871 + 5.20) × 10 = 56.871 V

Scanned by CamScanner

Scanned by TapScanner

Que 1.20. **Use superposition theorem to compute the current through 1 Ω resistor of Fig. 1.20.1.**

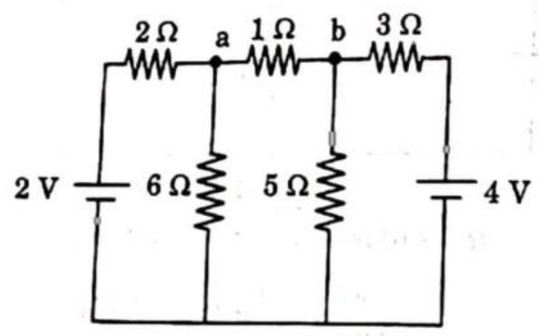

Fig. 2.20.1.

AKTU 2014-15(Sem-2), Marks 05

Answer

The procedure is same as Q. 1.19, Page 1–21D, Unit-1.

[**Ans.** Current through 1 Ω resistor = 0.22A from *b* to *a*].

Que 1.21. **Find current in 6 Ω using Thevenin's theorem.**

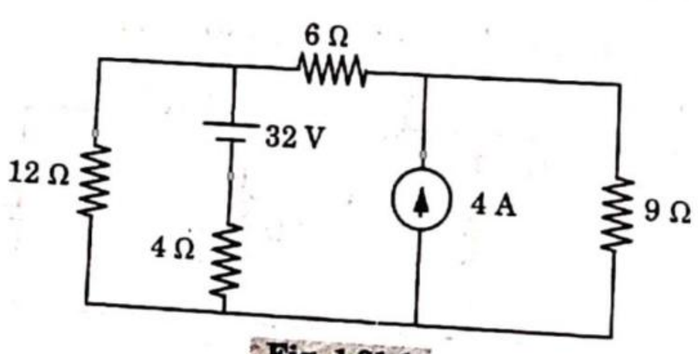

Fig. 1.21.1.

AKTU 2013-14(Sem-1), Marks 05

Answer

1. **Calculation of V_{TH} :**

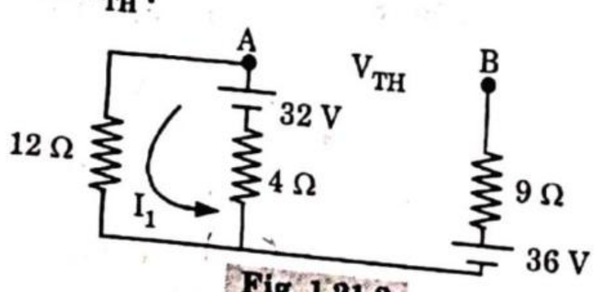

Fig. 1.21.2.

$$V_{TH} = 36 - \frac{32}{16} \times 12 = 12 \text{ V}$$

2. **Calculation of R_{TH} :**

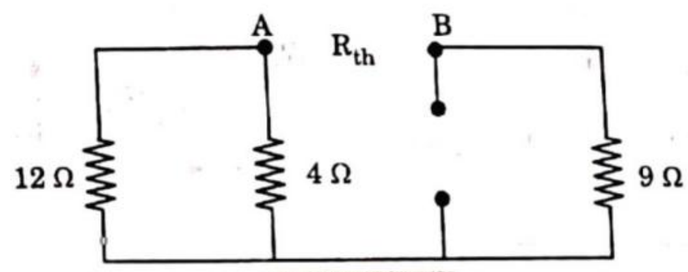

Fig. 1.21.3.

$$R_{TH} = \frac{12 \times 4}{12 + 4} + 9 = 3 + 9 = 12\ \Omega$$

3. **Thevenin's equivalent circuit :**

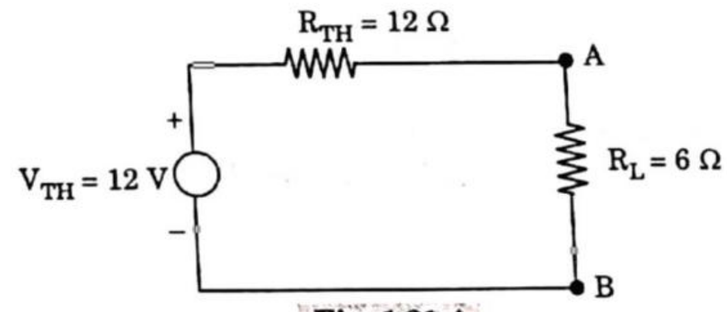

Fig. 1.21.4.

$$I = \frac{V_{TH}}{R_{TH} + R_L} = \frac{12}{12 + 6} = 0.67 \text{ A}$$

Que 1.22. **Deduce Thevenin's equivalent between the terminals *a* and *b* from the given circuit.**

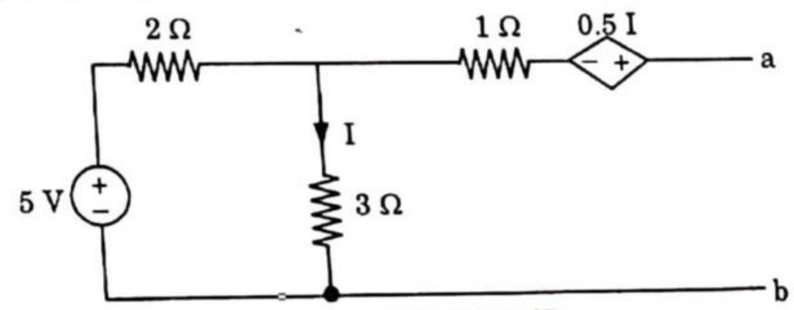

Fig. 1.22.1.

AKTU 2014-15(Sem-1), Marks 10

Answer

1. $$I = \frac{5}{3 + 2} = 1 \text{ A}$$

Scanned by TapScanner

2. Given network is

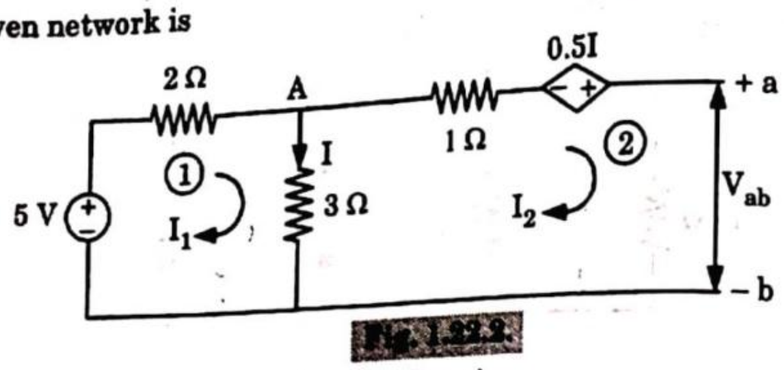

Fig. 1.22.2.

3. **Finding for V_{ab} :** (Open circuit voltage)

$$I = I_1 - I_2$$

Using KVL in loop (1)

$$-5 + 2I_1 + 3(I_1 - I_2) = 0$$

or, $5I_1 - 3I_2 = 5$ ...(1.22.1)

and, $4I_2 - 3I_1 = 0.5(I_1 - I_2) - V_{ab}$

or, $4.5I_2 - 3.5I_1 = -V_{ab}$ ...(1.22.2)

Since, $a - b$ terminal is kept opened.

Hence, $I_2 = 0$ (no current will flow in loop (2))

Putting $5I_1 = 5$

$\therefore$ $I_1 = 1\text{ A} = I$

$\because$ $-3.5 \times 1 = -V_{ab}$

$\therefore$ $V_{ab} = 3.5\text{ V}$

4. **Calculation for short circuit current, *i.e.*, I_{sc} :**

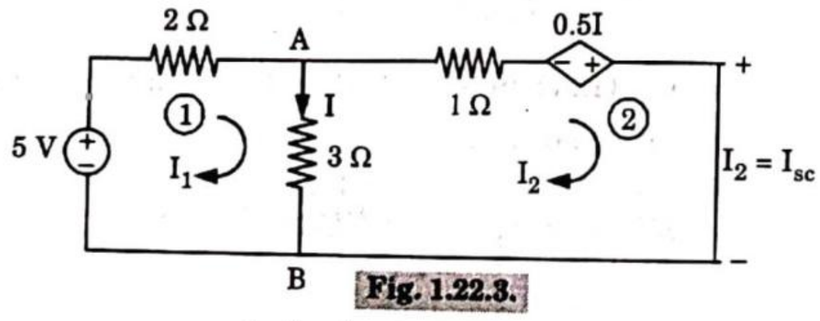

Fig. 1.22.3.

$$I = I_1 - I_2 = I_1 - I_{sc}$$

Using KVL in loop (1)

$$-5 + 5I_1 - 3I_2 = 0$$

$\therefore$ $5I_1 - 3I_2 = 5$ ...(1.22.3)

Again in loop (2) :

$$4I_2 - 3I_1 = 0.5\,(I_1 - I_2)$$

or, $4.5I_2 - 3.5I_1 = 0$

$\therefore$ $3.5I_1 - 4.5I_2 = 0$ ...(1.22.4)

Solving eq. (1.22.3) and (1.22.4)

$$I_1 = 1.88\text{ A}$$

$$I_2 = 1.46\text{ A} = I_{sc}$$

5. **Calculation for V_{TH} :**

$$V_{ab} = V_{TH} = 3.5\text{ V}$$

6. **Calculation for R_{TH} :**

$$R_{TH} = \frac{V_{ab}}{I_{sc}} = \frac{3.5}{1.46} = 2.4\ \Omega$$

7. Thus, Thevenin's equivalent circuit is :

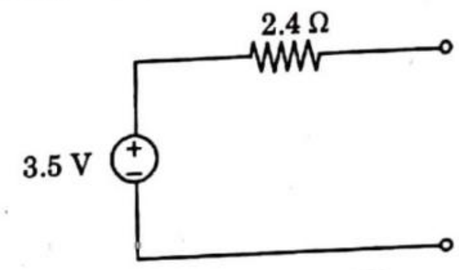

Fig. 1.22.4.

Que 1.23. **State Norton's Theorem. Find current across 15 Ω by using Norton's Theorem.**

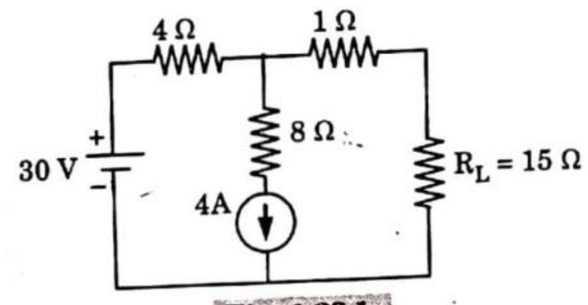

Fig. 1.23.1.

AKTU 2013-14(Sem-1), Marks 10

Answer

A. Norton's theorem : Refer Q. 1.18, Page 1–20D, Unit-1.

B. Numerical :

1. Apply KVL in outer loop, [Load terminal is short-circuited]

$$30 - 4I_1 - 1 \times (I_1 - 4) = 0$$

$$30 - 5I_1 + 4 = 0$$

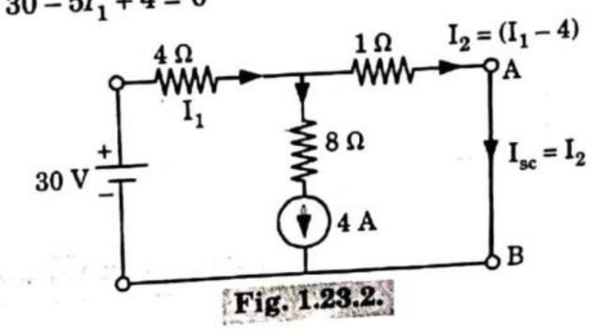

Fig. 1.23.2.

Scanned by TapScanner

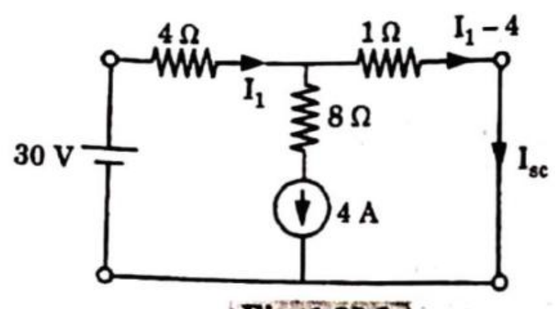

Fig. 1.23.3.

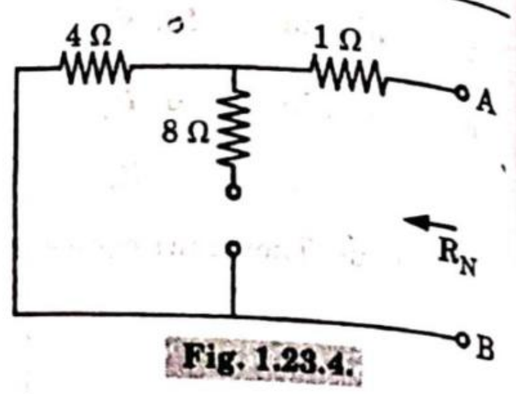

Fig. 1.23.4.

$$I_1 = \frac{34}{5} \text{ A}$$

$$I_2 = I_1 - 4 = \frac{34}{5} - 4 = \frac{14}{5} = 2.8 \text{ A}$$

$$\therefore \quad I_{sc} = I_2 = 2.8 \text{ A}$$

2. For Norton's equivalent resistance of the network,

$$R_N = 4 + 1 = 5\ \Omega$$

3. Thus, Norton's equivalent circuit with the load resistor of 15 Ω is as shown in Fig. 1.23.5.

Load current, $$I_L = I_{sc} \times \frac{R_N}{R_N + R_L} = 2.8 \times \frac{5}{5+15} = 0.7\ A$$

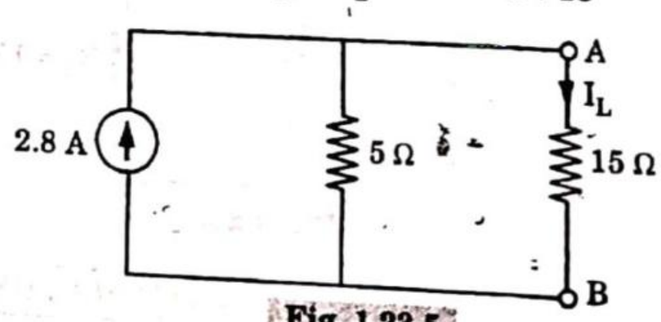

Fig. 1.23.5.

Que 1.24. **State Norton's Theorem. Obtain the Norton's equivalent circuit at terminals AB of the network given in Fig. 1.24.1.**

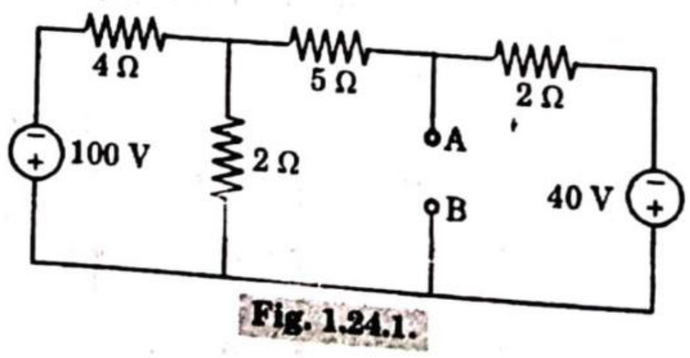

Fig. 1.24.1.

AKTU 2013-14(Sem-2), Marks 10

Answer

A. Norton's theorem : Refer Q. 1.18, Page 1–20D, Unit-1.

B. Numerical part :

1. **Calculation for I_N :** Short circuit *A* and *B*

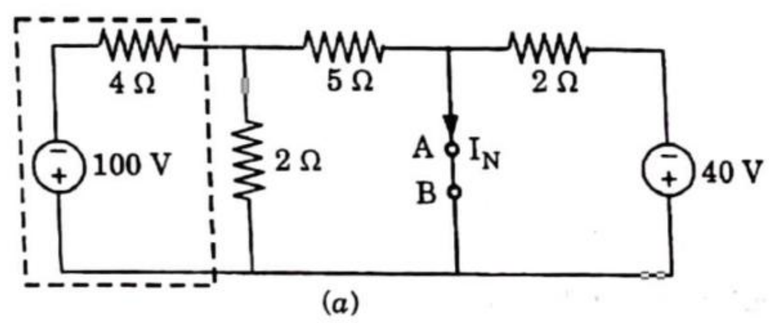

(*a*)

Changing this voltage source to current source

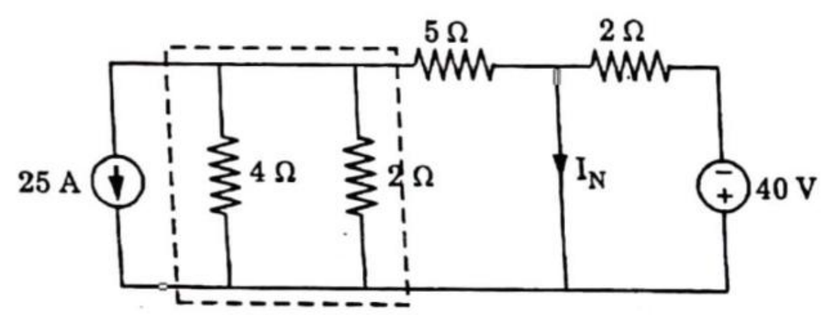

(*b*)

Solving parallel combination

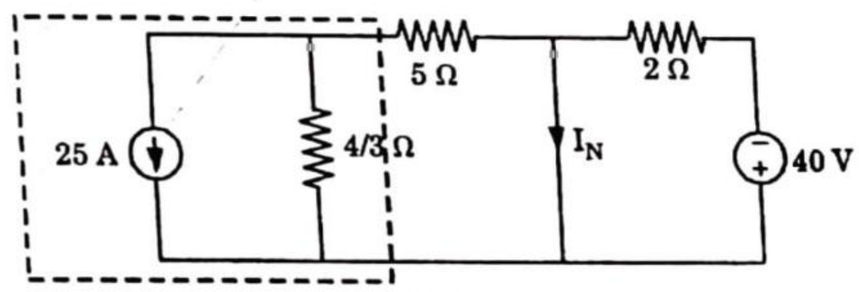

(*c*)

Again change current source to voltage source,

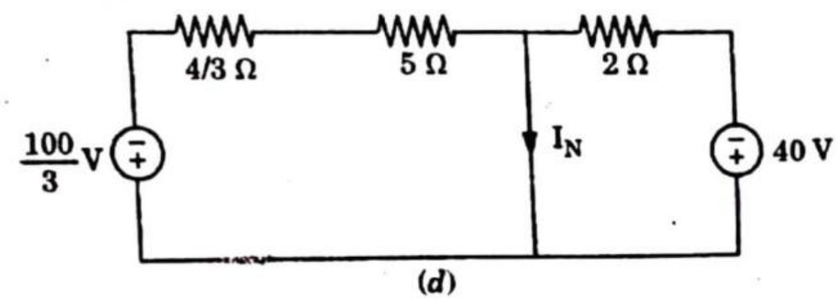

(*d*)

Solving series combination

Scanned by TapScanner

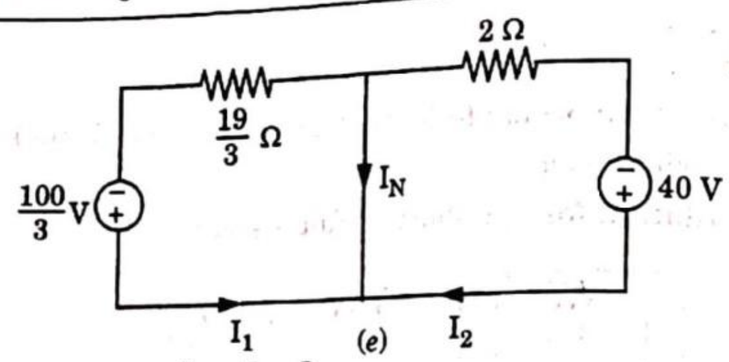

Now, $I_N = I_1 + I_2$

$$I_N = \frac{\left(\frac{100}{3}\right)}{(19/3)} + \frac{40}{2} = 25.26 \text{ A}$$

2. **Calculation for R_N :** Shorting all voltage sources,

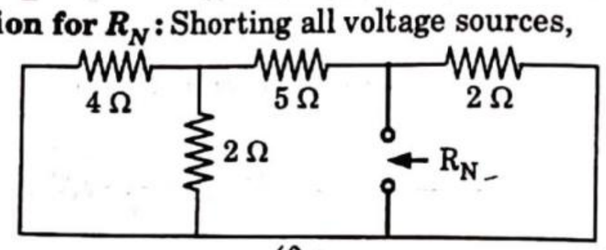

(f)

$$R_N = 2 \parallel (5 + (4 \parallel 2))$$

$$= 2 \parallel \left(5 + \frac{4 \times 2}{4 + 2}\right) = 1.52\ \Omega$$

So Norton's equivalent circuit at terminal AB is

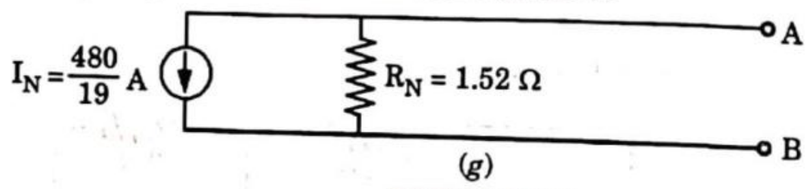

(g)

Fig. 1.24.2.

Que 1.25. **Explain the duality between Thevenin's and Norton's equivalent circuits.**

OR

How Norton's theorem is equivalent to Thevenin's theorem ? Also write the limitations of Thevenin's theorem and find the voltage across load resistance R_L using Thevenin's theorem when load resistance is 2 kΩ.

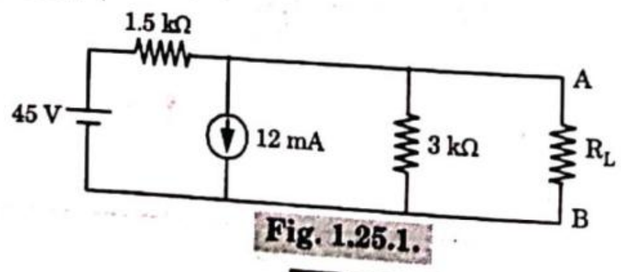

Fig. 1.25.1.

AKTU 2015-16(Sem-1), Marks 10

Answer

A. Duality :

1. Thevenin's and Norton's theorems help in reducing a complex network as seen from two terminals, into a simple circuit so that their response is easily determined.
2. Thevenin and Norton equivalent of N_1 as seen from ab are shown in Fig. 1.25.2.

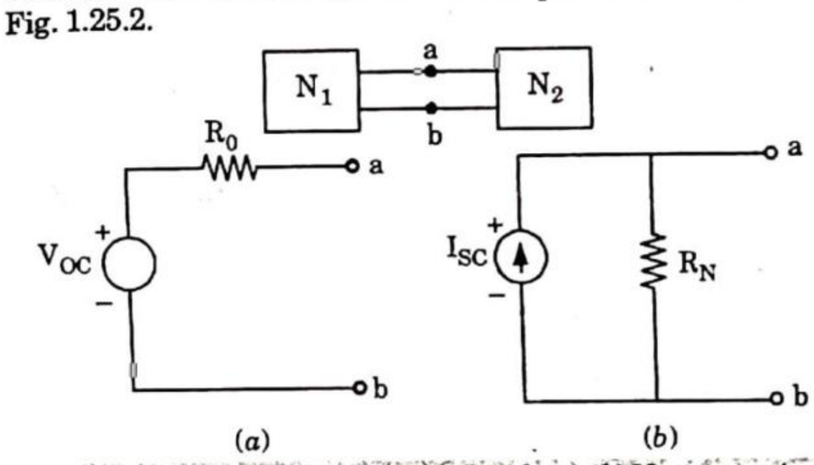

Fig. 1.25.2. (a) Thevenin equivalent, (b) Norton equivalent.

V_{OC} = Open circuit voltage at ab (when N_2 is disconnected)

R_O = Equivalent resistance of N_1 as seen from ab with voltage sources short circuited and current sources open circuited.

I_{SC} = Short circuit current flowing from a to b when terminals ab are shorted after disconnecting N_2.

3. We can see that the Norton equivalent follows from the Thevenin equivalent by source conversion and vice versa.
4. For Thevenin equivalent :

$$V_{OC} = V_{TH} = \text{Thevenin voltage}$$
$$R_O = R_{TH} = \text{Thevenin resistance}$$

5. For Norton equivalent :

$$R_O = R_N, \text{ Norton resistance}$$
$$R_N = R_{TH}$$
$$I_{SC} = \frac{V_{OC}}{R_O} = \frac{V_{TH}}{R_{TH}}$$

B. Limitations of Thevenin's theorem :

1. Not applicable to the circuits consisting of non-linear elements.
2. Not applicable to unilateral networks.
3. There should not be magnetic coupling between the load and circuit to be replaced by this theorem.
4. In the load side, there should not be controlled sources, controlled from some other part of the circuit.

C. Numerical :

1. The equivalent resistance of the network with voltage source short-circuited and current source open-circuited with reference to terminals A and B :

Scanned by TapScanner

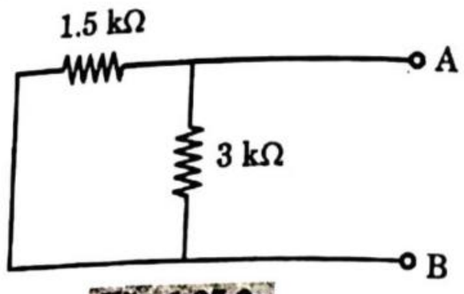

Fig. 1.25.3.

$$R_T = 3 \parallel 1.5 = \frac{3 \times 1.5}{3 + 1.5} = \frac{4.5}{4.5} = 1\ \Omega$$

2. Converting current source of 12 mA connected across 3 kΩ resistance into equivalent voltage source of 36 V in series with resistor of 3 kΩ and removing the 2 kΩ resistor, the circuit is converted as

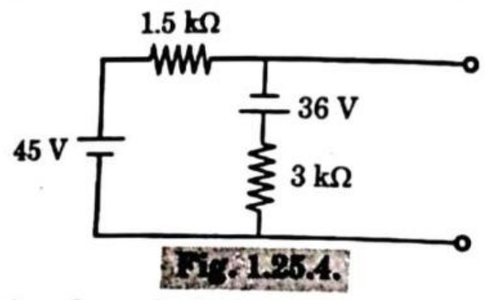

Fig. 1.25.4.

3. The current flowing through the mesh formed by voltage sources and resistors of 1.5 kΩ and 3 kΩ is given as

$$I = \frac{45 + 36}{(1.5 + 3) \times 10^3} = 18 \text{ mA}$$

4. Voltage across terminals A and B,

$$V_{AB} = 45 - 1.5 \times 18 \times 10^{-3} = 44.973 \text{ V}$$

5. Current flowing through resistor of 2 kΩ $= \dfrac{44.973}{1 + 2} = 14.991$ mA

Que 1.26. **Calculate the current in the 6 Ω resistance by using Norton's theorem.**

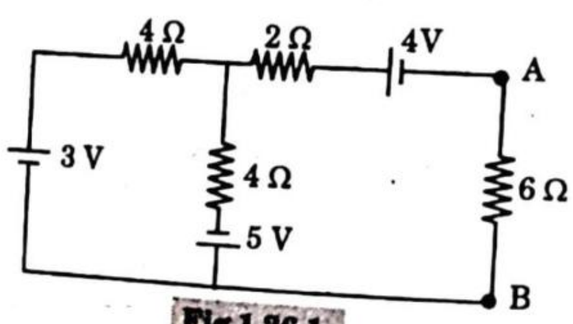

Fig.1.26.1.

AKTU 2017-18(Sem-2), Marks 07

Answer

A. To Find I_{sc} :

1. 6 Ω resistor is short circuited

2. Using KVL in loop (1),

$$-3 + 4I_1 + 4I_1 - 4I_2 - 5 = 0 \qquad \text{...(1.26.1)}$$
$$8I_1 - 4I_2 = 8$$

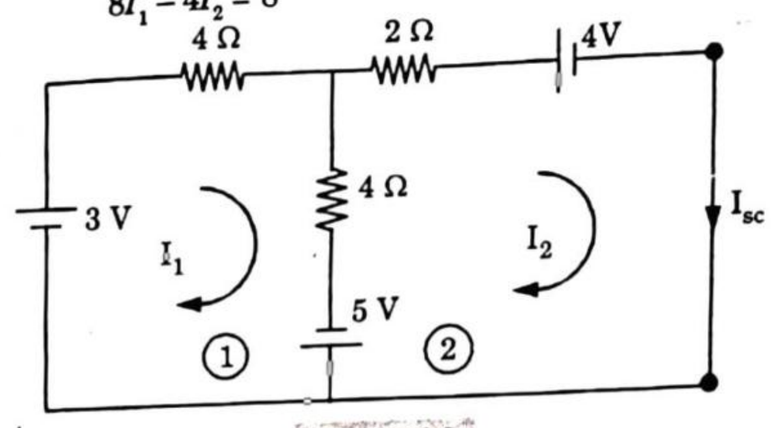

Fig. 1.26.2.

3. Again using KVL in loop (2),

$$5 + 4I_2 + 2I_2 + 4 - 4I_1 = 0$$
$$6I_2 - 4I_1 = -9$$
$$4I_1 - 6I_2 = 9 \qquad \text{...(1.26.2)}$$

4. Solving eq. (1.26.1) and (1.26.2), $I_2 = -5/4$ A $= I_{sc}$

B. To Find R_{TH} :

1. Voltage source is short circuited and Load terminal is open circuited
2. $$R_{TH} = R_N = 2 + (4 \parallel 4) = 2 + 2 = 4\ \Omega$$

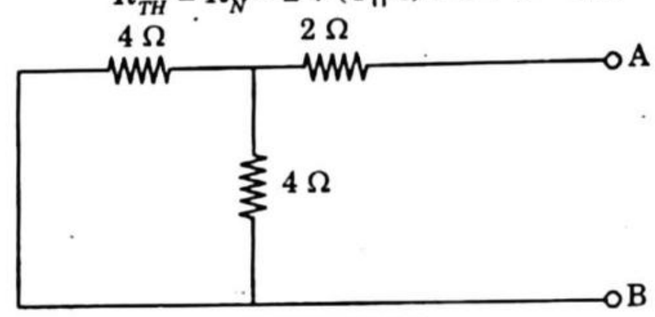

Fig. 1.26.3.

C. Norton's equivalent circuit :

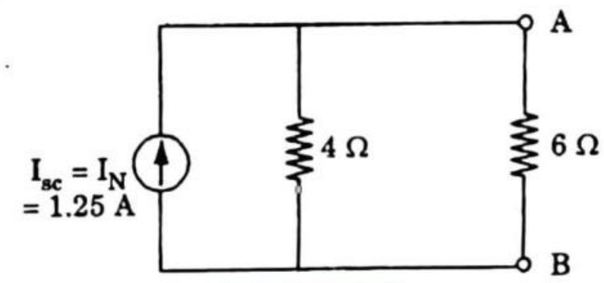

Fig. 1.27.4.

Current through 6 Ω (flowing from A to B)

$$= 1.25 \times \frac{4}{6 + 4} = 0.5 \text{ A}$$

☺☺☺

Scanned by TapScanner

2 UNIT

Steady-State Analysis of 1ϕ AC Circuits

Part-1 ..... **(2–2D to 2–9D)**

- *Representation of Sinusoidal Waveforms – Average and Effective Values*
- *Form and Peak Factor*
- *Concept of Phasors*
- *Phasor representation of Sinusoidally Varying Voltage and Current*

A. Concept Outline : Part-1 ..... 2–2D
B. Long and Medium Answer Type Questions 2–2D

Part-2 ..... **(2–9D to 2–23D)**

- *Single Phase AC Circuits Consisting of R, L, C, RL, RC, RLC Combinations (Series and Parallel)*

A. Concept Outline : Part-2 ..... 2–9D
B. Long and Medium Answer Type Questions 2–9D

Part-3 ..... **(2–23D to 2–27D)**

- *Apparent, Active and Reactive Power*
- *Power Factor*
- *Power Factor Improvement*

A. Concept Outline : Part-3 ..... 2–23D
B. Long and Medium Answer Type Questions 2–24D

Part-4 ..... **(2–27D to 2–40D)**

- *Concept of Resonance in Series and Parallel Circuits*
- *Bandwidth and Quality Factor*

A. Concept Outline : Part-4 ..... 2–28D
B. Long and Medium Answer Type Questions 2–28D

Part-5 ..... **(2–40D to 2–48D)**

- *Three Phase Balanced Circuits*
- *Voltage and Current Relations in Star and Delta Connections.*

A. Concept Outline : Part-5 ..... 2–40D
B. Long and Medium Answer Type Questions 2–40D

PART-1

Representation of Sinusoidal Waveforms – Average and Effective Values, Form and Peak Factor, Concept of Phasors, Phasor Representation of Sinusoidally Varying Voltage and Current.

CONCEPT OUTLINE : PART-1

- An alternating quantity that varies sinusoidally is called sinusoidal quantity.
- Average value

$$V_{av} = \frac{1}{T}\int_0^T v\,dt$$

- RMS value or effective value

$$I_{rms} = \sqrt{\frac{1}{T}\int_0^T i^2\,dt}$$

- $$\text{Form factor} = \frac{\text{RMS value of current}}{\text{Average value of current}}$$
- $$\text{Peak factor} = \frac{\text{Maximum value of current}}{\text{RMS value of current}}$$

Questions-Answers

Long Answer Type and Medium Answer Type Questions

Que 2.1. **Derive expression for average value and rms value of a sinusoidally varying AC voltage.**

AKTU 2017-18(Sem-2), Marks 07

OR

Derive expression for average and rms value of a sinusoidally varying AC voltage. Also write form factor and peak factor.

Answer

A. Average value for sinusoidal current or voltage :

1. The average value of a sine wave over a complete cycle is zero. Therefore, the half cycle average value is intended.
2. Instantaneous value of sinusoidal current is given by

$$i = I_{max} \sin \omega t$$

Consider first half cycle, *i.e.*, when ωt varies from 0 to π, we get

Scanned by TapScanner

$$I_{av} = \frac{\text{Area of first half cycle}}{\pi}$$

$$= \frac{1}{\pi}\int_0^{\pi} i\, d(\omega t) = \frac{1}{\pi}\int_0^{\pi} I_{max} \sin \omega t\, d(\omega t)$$

$$= \frac{I_{max}}{\pi}\left[-\cos \omega t\right]_0^{\pi} = \frac{2}{\pi} I_{max} = 0.6371\, I_{max}$$

2. Similarly, $E_{av} = 0.637\, E_{max}$

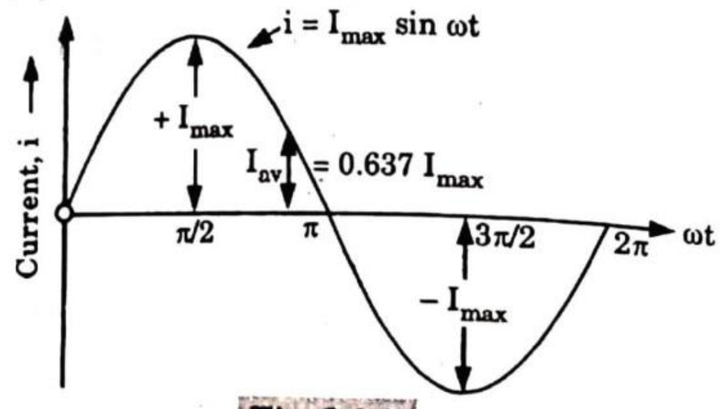

Fig. 2.1.1.

B. Effective (RMS) value for sinusoidal current or voltage :

1. A sinusoidal alternating current is represented by

$$i = \frac{\text{Area of first half cycle of } i^2}{\pi}$$

$$= \frac{1}{\pi}\int_0^{\pi} i^2\, d(\omega t) = \frac{1}{\pi}\int_0^{\pi} I_{max}^2 \sin^2 \omega t\, d(\omega t)$$

$$= \frac{I_{max}^2}{2\pi}\int_0^{\pi}(1 - \cos 2\omega t)\, d(\omega t)$$

$$= \frac{I_{max}^2}{2\pi}\left[\omega t - \frac{1}{2}\sin 2\omega t\right]_0^{\pi} = \frac{I_{max}^2}{2\pi} \times \pi = \frac{I_{max}^2}{2}$$

$$\therefore \quad I_{rms} = \sqrt{\frac{I_{max}^2}{2\pi}} = \frac{I_{max}}{\sqrt{2}}$$

2. Similarly, $E_{rms} = \dfrac{E_{max}}{\sqrt{2}}$

C. Form factor $= \dfrac{E_{rms}}{E_{av}} = 1.11$

D. Peak factor $= \dfrac{E_{max}}{E_{rms}} = \dfrac{E_{max}}{E_{max}/\sqrt{2}} = 1.414$

Que 2.2. **The equation of an alternating current $i = 42.42 \sin 628t$. Determine**

i. Maximum value **ii. Frequency** **iii. rms value**
iv. Average value **v. Form factor.**

AKTU 2017-18(Sem-2), Marks 07

Answer

Given : $i = 42.42 \sin 628t$
To Find : Maximum value of current, I_{max}; frequency, f; rms value, I_{rms}; average value, I_{av} and form factor.

1. Instantaneous value of alternating current

$$i = 42.42 \sin 628t \quad \text{...(2.2.1)}$$

Standard equation of alternating current

$$i = I_{max} \sin (2\pi f t + \phi) \quad \text{...(2.2.2)}$$

Comparing eq. (2.2.1) and (2.2.2), we get

$$I_{max} = 42.42 \text{ A}$$

2. **Frequency,** $f = \dfrac{628}{2\pi} = 100$ Hz

3. **rms value,** $I_{rms} = \dfrac{I_{max}}{\sqrt{2}} = \dfrac{42.42}{\sqrt{2}} = 30$ A

4. **Average value,** $I_{av} = 0.637\, I_{max} = 0.637 \times 42.42 = 27$ A

5. **Form factor** $= \dfrac{I_{rms}}{I_{av}} = \dfrac{30}{27} = 1.11$

Que 2.3. **Calculate average value, rms value, form factor and peak factor of the following waveform shown in Fig. 2.3.1.**

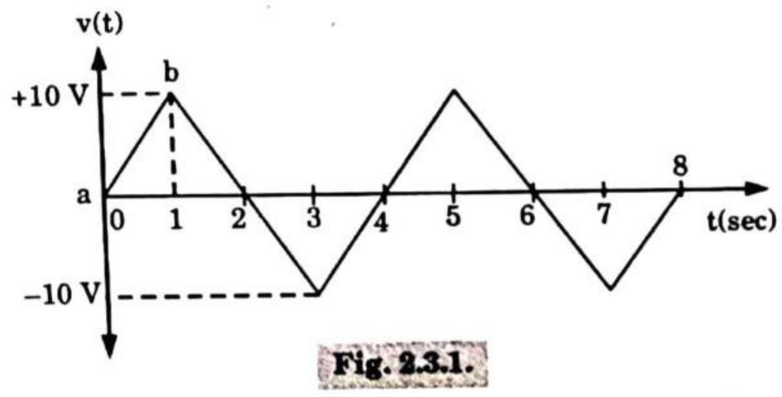

Fig. 2.3.1.

AKTU 2017-18(Sem-1), Marks 07

Answer

$$V_{max} = 10 \text{ V}$$

1. Equation of line ab : $v(t) = mt$

$$m = \frac{10 - 0}{1 - 0} = 10$$

Scanned by TapScanner

$$v(t) = 10t$$

2. Average value, $V_{av} = \frac{1}{1}\int_0^1 v(t)\,dt = \int_0^1 10t\,dt = \frac{10\,[t^2]_0^1}{2} = \frac{10}{2}[1] = 5\text{ V}$

3. rms value, $V_{rms} = \left[\frac{1}{1}\int_0^1 v^2(t)\,dt\right]^{1/2} = \left[\int_0^1 (10t)^2\,dt\right]^{1/2}$

$$= \left[\left(\frac{100\,t^3}{3}\right)_0^1\right]^{1/2} = \sqrt{\frac{100}{3}} = \frac{10}{\sqrt{3}}\text{ V}$$

4. Form factor, $K_f = \frac{V_{rms}}{V_{av}} = \frac{10/\sqrt{3}}{5} = \frac{2}{\sqrt{3}} = 1.154$

5. Peak factor, $K_p = \frac{V_{max}}{V_{rms}} = \frac{10}{10/\sqrt{3}} = \sqrt{3} = 1.73$

imp

Que 2.4. **Find average and rms values of following voltage waveform.**

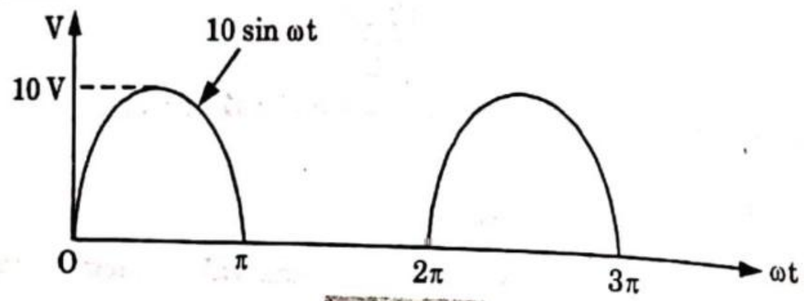

Fig. 2.4.1.

AKTU 2015-16(Sem-2), Marks 10

Answer

1. $$V_{avg} = \frac{1}{T}\int_0^T V\,dt = \frac{1}{2\pi}\int_0^{2\pi} V\,d\omega t$$

$$= \frac{1}{2\pi}\int_0^{\pi} V\,d\omega t + \frac{1}{2\pi}\int_{\pi}^{2\pi} 0\,d\omega t = \frac{1}{2\pi}\int_0^{\pi} V\,d\omega t$$

$$= \frac{1}{2\pi}\int_0^{\pi} 10\sin\omega t\,d\omega t = \frac{1}{2\pi}[-10\cos\omega t]_0^{\pi}$$

$$= \frac{10}{2\pi}\times 2 = \frac{10}{\pi} = 3.18\text{ V}$$

2. Also, $V_{rms} = \sqrt{\frac{1}{T}\int_0^T V^2\,dt} = \sqrt{\frac{1}{2\pi}\int_0^{2\pi} V^2 d\omega t}$

$$= \sqrt{\frac{1}{2\pi}\int_0^{\pi}(10\sin\omega t)^2\,d\omega t + \frac{1}{2\pi}\int_{\pi}^{2\pi} 0^2 d\omega t}$$

$$= \sqrt{\frac{100}{2\pi}\int_0^{\pi}\sin^2\omega t\,d\omega t} = \sqrt{\frac{50}{\pi}\int_0^{\pi}\left(\frac{1-\cos 2\omega t}{2}\right)d\omega t}$$

$$= \sqrt{\frac{25}{\pi}\left[\omega t - \frac{\sin 2\omega t}{2}\right]_0^{\pi}} = \sqrt{\frac{25}{\pi}[\pi - 0 - 0 + 0]} = 5\text{ V}$$

T.MP

Que 2.5. **Find form factor and peak factor for given waveform in Fig. 2.5.1.**

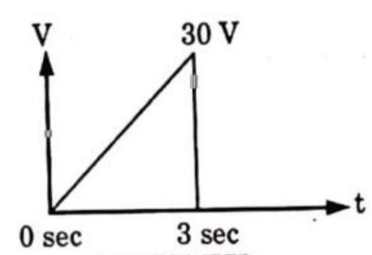

Fig. 2.5.1.

AKTU 2014-15(Sem-2), Marks 10

Answer

1. $$V_{rms} = \sqrt{\frac{1}{3}\int_0^3 (10\,t)^2\,dt} = 17.32\text{ V}$$

2. $$V_{avg} = \frac{1}{3}\int_0^3 10\,t\,dt = \frac{10}{3}\left[\frac{t^2}{2}\right]_0^3 = \frac{10}{3}\left[\frac{9}{2}\right] = 15\text{ V}$$

3. $$V_{max} = \sqrt{2}\,V_{rms} = \sqrt{2}\times 17.32 = 24.49\text{ V}$$

4. $$\text{Form factor} = \frac{V_{rms}}{V_{avg}} = \frac{17.32}{15} = 1.1547$$

5. $$\text{Peak factor} = \frac{V_{max}}{V_{rms}} = \frac{24.49}{17.32} = 1.4139$$

Que 2.6. **Discuss the concept of phasors.**

Answer

1. A phasor is a physical quantity which has a magnitude as well as direction.
2. Such phasor quantities are completely known when particulars of their direction, magnitude and the sense in which they act are given. They are graphically represented by straight lines.

Scanned by TapScanner

3. *OP* is such a phasor which represents maximum value of voltage and its angle with *x* axis gives its phase.
4. It will be seen that the projection of *OP* and y axis at any instant gives instantaneous value of voltage (*V*).

$$OM = OP \sin \omega t$$

$$\therefore \quad v = V_{max} \sin \omega t$$

$$\therefore \quad v = V_{max} \sin \omega t$$

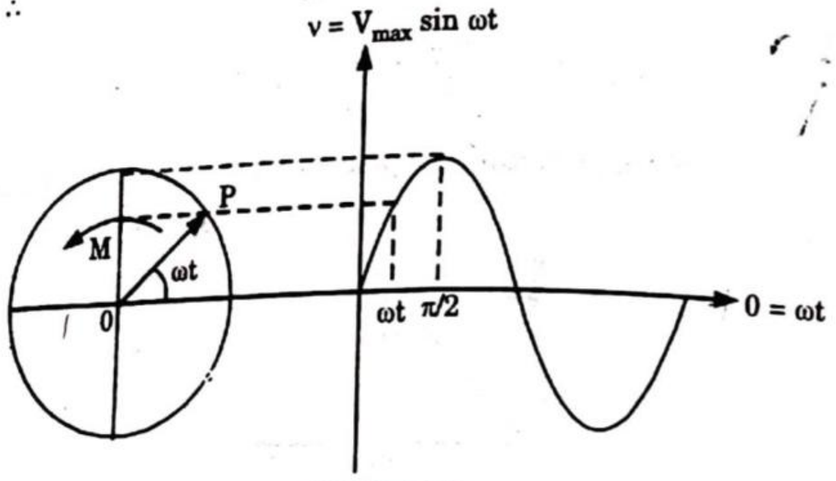

Fig. 2.6.1.

Que 2.7. **Draw the phasor diagram for the following voltages. Calculate the resultant voltage. Also find the rms voltage.**

$$v_1 = 100 \sin 500t$$
$$v_2 = 200 \sin (500t + \pi/3)$$
$$v_3 = -50 \cos 500t$$
$$v_4 = 150 \sin (500t - \pi/4)$$

AKTU 2016-17(Sem-2), Marks 07

Answer

1. **Phasor diagram :**

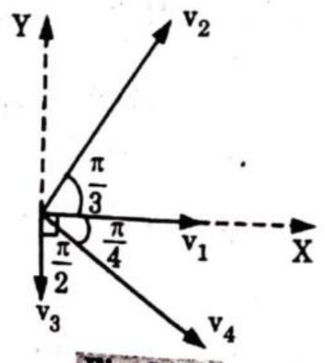

Fig. 2.7.1.

2. Algebraic sum of *X*-components

$$= 100 \cos 0° + 200 \cos \pi/3 + 50 \cos (-\pi/2) + 150 \cos (-\pi/4)$$

$$= 100 + (200 \times 0.5) + 0 + \frac{150}{\sqrt{2}} = 306 \text{ V}$$

3. Algebraic sum of *Y*-components

$$= 100 \sin 0° + 200 \sin \pi/3 + 50 \sin (-\pi/2) + 150 \sin (-\pi/4)$$
$$= 0 + (200 \times 0.866) - 50 - 106 = 17.2 \text{ V}$$

4. $$V_{r\,max} = \sqrt{(306)^2 + (17.2)^2} = 306.5 \text{ V}$$

5. Phase angle, $\phi_r = \tan^{-1} \dfrac{Y\text{-component}}{X\text{-component}}$

$$= \tan^{-1} \frac{17.2}{306} = 3.22° = 0.018\pi$$

6. Resultant voltage, $v_r = 306.5 \sin (500t + 0.018\pi)$

7. $$V_{r\,rms} = \frac{306.5}{\sqrt{2}} = 216.73 \text{ V}$$

Que 2.8. **Draw a phasor diagram showing the following voltage :**

$$v_1 = 100 \sin 500\,t$$
$$v_2 = 200 \sin (500\,t + 45°)$$
$$v_3 = \cos 500\,t$$

Find rms value of resultant voltage.

AKTU 2013-14(Sem-2), Marks 10

Answer

The procedure is same as Q. 2.7, Page 2–7D, Unit-2.

(Ans : $V_{rms} = 198.2$ V)

Que 2.9. **If two alternating currents represented by $i_1 = 7 \sin \omega t$ and $i_2 = 10 \sin (\omega t + \pi/3)$ are fed into a common conductor, then find equation for resultant current and its rms value.**

AKTU 2013-14(Sem-1), Marks 05

Answer

1. Resultant current, $i_r = i_1 + i_2$

$$= 7 \sin \omega t + 10 \sin \left(\omega t + \frac{\pi}{3}\right)$$

$$= 7 \sin \omega t + 10 \sin \omega t \cos \frac{\pi}{3} + 10 \cos \omega t \sin \frac{\pi}{3}$$

$$= 7 \sin \omega t + 10 \sin \omega t \times 0.5 + 10 \cos \omega t \times 0.866$$

$$i_r = 12 \sin \omega t + 8.66 \cos \omega t \quad \text{...(2.9.1)}$$

$$\therefore \quad I_{r\,max} = \sqrt{(12)^2 + (8.66)^2} = 14.8$$

∴ Multiplying and dividing eq. (2.9.1) by 14.8, we get

Scanned by TapScanner

$$i_r = 14.8\left[\sin \omega t \times \frac{12}{14.8} + \cos \omega t \times \frac{8.66}{14.8}\right]$$

As
$$i_r = 14.8\left[\sin \omega t \cos \phi_r + \cos \omega t \sin \phi_r\right] \quad ...(2.9.2)$$

where $\cos \phi_r = \frac{12}{14.8}$ and $\sin \phi_r = \frac{8.66}{14.8}$

$$\therefore \quad \phi_r = \tan^{-1} \frac{8.66}{12} = 0.199\,\pi \text{ radians}$$

Thus, eq. (2.9.2) can be written as

$$i_r = 14.8 \sin(\omega t + \phi_r) = 14.8 \sin(\omega t + 0.199\,\pi)$$

2. Peak value of resultant current, $I_{r\,max} = 14.8$ A
3. rms value of resultant current, $I_{r\,rms} = \frac{14.8}{\sqrt{2}} = 10.46$ A

PART-2

Single Phase AC Consisting of R, L, C, RL, RC, RLC Combinations (Series and Parallel).

CONCEPT OUTLINE : PART-2

- In series RL circuit,

$$I = \frac{V}{Z} = \frac{V}{\sqrt{R^2 + \omega^2 L^2}} \text{ and } \phi = \tan^{-1} \frac{\omega L}{R}$$

- In series RC circuit,

$$I = \frac{V}{\sqrt{R^2 + 1/\omega^2 C^2}} \text{ and } \phi = \tan^{-1} \frac{1}{\omega RC}$$

- In series RLC circuit,

$$I = \frac{V}{\sqrt{R^2 + (\omega L - 1/\omega C)^2}} \text{ and } \phi = \tan^{-1} \frac{\omega L - 1/\omega C}{R}$$

Questions-Answers

Long Answer Type and Medium Answer Type Questions

Que 2.10. **Show that the instantaneous power consumed in a pure resistive circuit is not constant but it is fluctuating.**

OR

Derive phasor relationship between voltage and current phasor for purely resistive circuit.

Answer

1. Consider an AC circuit containing resistance of R ohms connected across a sinusoidal voltage represented by ...(2.10.1)

$$v = V_{max} \sin \omega t$$

2.
$$iR = v$$

$$i = \frac{v}{R} = \frac{V_{max}}{R} \sin \omega t$$

$$\therefore \quad I_{max} = \frac{V_{max}}{R} \text{ A}$$

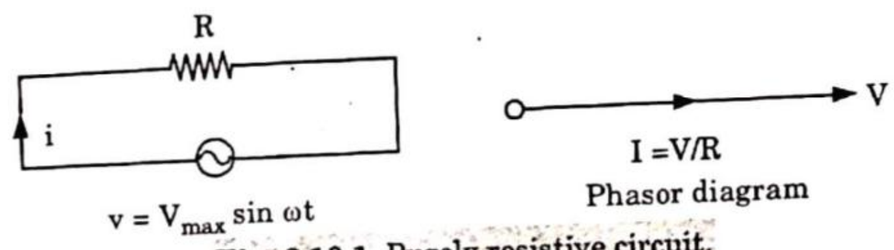

Fig. 2.10.1. Purely resistive circuit.

3. Instantaneous current may be expressed as ...(2.10.2)

$$i = i_{max} \sin \omega t$$

4. From eq. (2.10.1) and eq. (2.10.2), it can be said that the applied voltage and current are in phase with each other.
5. The instantaneous power delivered to the circuit

$$p = vi = V_{max} \sin \omega t\, I_{max} \sin \omega t = V_{max} I_{max} \sin^2 \omega t$$

$$= \frac{V_{max} I_{max}}{2}(1 - \cos 2\omega t)$$

$$= \frac{V_{max} I_{max}}{2} - \frac{V_{max} I_{max}}{2} \cos 2\omega t \quad ...(2.10.3)$$

From eq. (2.10.3), it is clear that power consumed in a purely resistive circuit is not constant, it is fluctuating.

6. Average power, $P = \text{Avg of } \frac{V_{max} I_{max}}{2} - \text{Avg of } \frac{V_{max} I_{max}}{2} \cos 2\omega t$

$$P = \frac{V_{max} I_{max}}{2} = \frac{V_{max}}{\sqrt{2}} \frac{I_{max}}{\sqrt{2}} = V I \text{ watts}$$

where V and I are the rms values of applied voltage and current respectively.

Que 2.11. **In a purely inductive circuit, prove that the current lags behind applied voltage by quarter of a cycle and also show that average power demand is zero.**

Scanned by TapScanner

1. Consider an AC circuit containing inductance of L H connected across a sinusoidal voltage

$$v = V_{max} \sin \omega t \quad ...(2.11.1)$$

2. Self induced emf in the coil,

$$e_L = -L\frac{di}{dt}$$

$$\therefore \quad V_{max} \sin \omega t = -\left(-L\frac{di}{dt}\right)$$

$$di = \frac{V_{max}}{L} \sin \omega t \, dt$$

$$\int di = \frac{V_{max}}{L}\int \sin \omega t \, dt$$

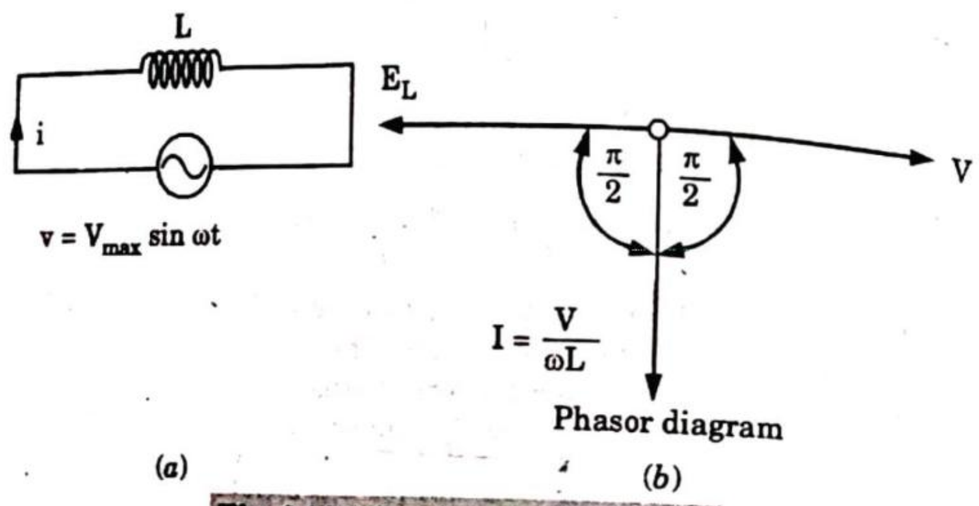

Fig. 2.11.1. Purely inductive circuit.

3. Integrating both sides, we get

$$i = \frac{V_{max}}{\omega L}(-\cos \omega t) + C$$

where, C is a constant which is found to be zero from initial condition.

$$I_{max} = \frac{V_{max}}{\omega L}$$

$$\therefore \quad i = I_{max} \sin\left(\omega t - \frac{\pi}{2}\right) \quad ...(2.11.2)$$

4. From eq. (2.11.1) and (2.11.2) it is observed that current lags behind the applied voltage by $\pi/2$, *i.e.*, quarter of a cycle.

5. Instantaneous power, $p = v \times i = V_{max} \sin \omega t \, I_{max} \sin\left(\omega t - \frac{\pi}{2}\right)$

$$p = -V_{max} I_{max} \sin \omega t \cos \omega t$$

$$= -\frac{V_{max} I_{max}}{2} \sin 2\omega t \quad ...(2.11.3)$$

6. The power measured by wattmeter is the average value of p which is zero since average of a sinusoidal quantity of double frequency over a complete cycle is zero. Hence in a purely inductive circuit power absorbed is zero.

Que 2.12. Explain the concept of phasors. Derive the phasor relationship between voltage and current phasors for purely inductive, purely capacitive and purely resistive circuits.

AKTU 2017-18(Sem-1), Marks 07

Answer

A. Concept of phasors : Refer Q. 2.6, Page 2–6D, Unit-2.

B. Purely resistive circuits : Refer Q. 2.10, Page 2–9D, Unit-2.

C. Purely inductive circuits : Refer Q. 2.11, Page 2–10D, Unit-2.

D. Purely capacitive circuits :

1. Let an alternating voltage represented by $v = V_{max} \sin \omega t$ be applied across a capacitor of capacitance C farads.

Instantaneous applied voltage,

$$v = V_{max} \sin \omega t \quad ...(2.12.1)$$

2. The expression for instantaneous charge is given as

$$q = C V_{max} \sin \omega t$$

$$i = \frac{dq}{dt} = \frac{d}{dt}[C V_{max} \sin \omega t]$$

$$= \omega C V_{max} \cos \omega t = \frac{V_{max}}{1/\omega C} \sin\left(\omega t + \frac{\pi}{2}\right)$$

3. Current is maximum when $t = 0$

$$\therefore \quad I_{max} = \frac{V_{max}}{1/\omega C}$$

4. Instantaneous current, $i = I_{max} \sin\left(\omega t + \frac{\pi}{2}\right)$ ...(2.12.2)

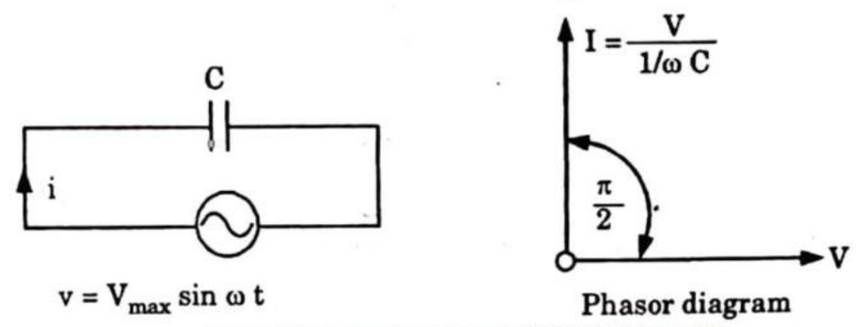

Fig. 2.12.1. Purely capacitive circuit.

3. From eq. (2.12.1) and (2.12.2), it is observed that current leads the applied voltage by $\pi/2$.

Scanned by TapScanner

4. Instantaneous power, $p = v \times i = V_{max} \sin \omega t \, I_{max} \sin\left(\omega t + \frac{\pi}{2}\right)$

$$p = V_{max} I_{max} \sin \omega t \cos \omega t$$

$$= \frac{V_{max} I_{max}}{2} \sin 2\omega t$$

5. Average power, $P = \frac{V_{max} I_{max}}{2} \times$ Average of $\sin 2\omega t$ over complete cycle $= 0$

Que 2.13. Deduce an expression for the average power in a single phase series RL circuit.

Answer

1. Consider an AC circuit consisting of resistance of R ohms and inductance of L henrys connected in series, as shown in Fig. 2.13.1(a).
2. Voltage drop across resistance, $V_R = I R$ in phase with the current.
   Voltage drop across inductance, $V_L = I X_L = I\omega L$ leading I by $\pi/2$ radians.
3. The applied voltage is equal to the phasor sum of V_R and V_L, given by

$$V = \sqrt{(V_R)^2 + (V_L)^2} = \sqrt{(IR)^2 + (I X_L)^2}$$

$$= \sqrt{R^2 + X_L^2} = IZ$$

where, $X_L = \omega L = 2\pi fl$

Quantity $\sqrt{R^2 + X_L^2}$ is known as impedance, denoted by Z and is expressed in ohms.

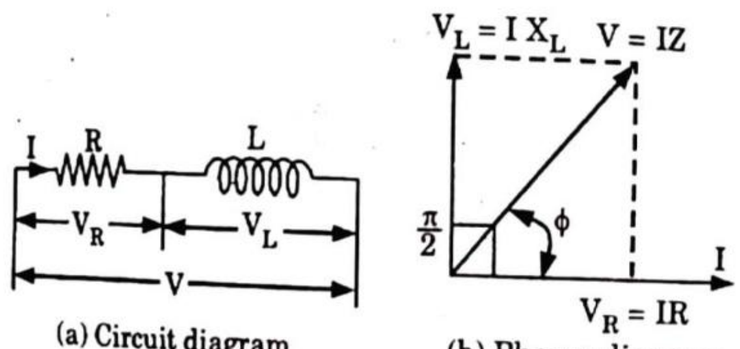

(a) Circuit diagram (b) Phasor diagram

Fig. 2.13.1.

4. From phasor diagram shown in Fig. 2.13.1(b) the current lags behind the applied voltage V by angle ϕ, which is given by

$$\tan \phi = \frac{V_L}{V_R} \quad \text{or} \quad \frac{X_L}{R}$$

$$\phi = \tan^{-1} \frac{X_L}{R}$$

5. If the applied voltage $v = V_{max} \sin \omega t$, then expression for the circuit current will be

$$i = I_{max} \sin(\omega t - \phi)$$

where, $I_{max} = \frac{V_{max}}{Z}$ and $\phi = \tan^{-1} \frac{X_L}{R}$

6. Instantaneous power, $p = v\, i = V_{max} \sin \omega t \times I_{max} \sin(\omega t - \phi)$

$$= \frac{1}{2} V_{max} I_{max} \cos \phi - \frac{1}{2} V_{max} I_{max} \cos(2\omega t - \phi)$$

7. $$p_{avg} = \frac{V_{max}}{\sqrt{2}} \frac{I_{max}}{\sqrt{2}} \cos \phi = V I \cos \phi$$

where V and I are the rms values of voltage and current respectively and ϕ is the phase angle between applied voltage V and circuit current I.

Que 2.14. How do you analyse series RC circuit ? Draw its phasor diagram.

Answer

1. Consider an AC circuit consisting of resistance of R ohms and capacitance of C farads connected in series, as shown in Fig. 2.14.1(a).

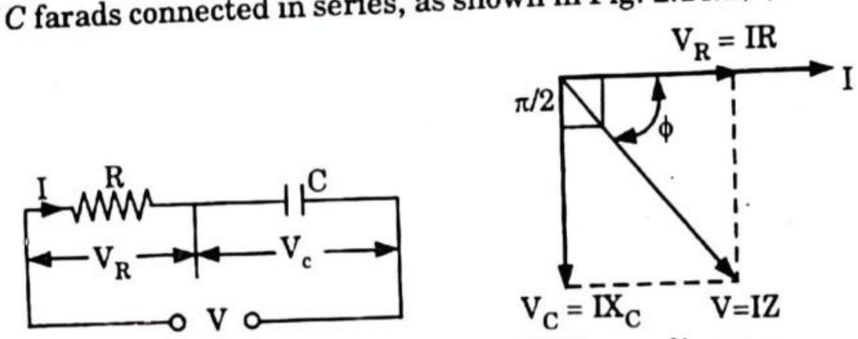

(a) Circuit diagram (b) Phasor diagram

Fig. 2.14.1.

2. Voltage drop across resistance,

$$V_R = I R \text{ in phase with current.}$$

Voltage drop across capacitance, $V_C = I X_C$ lagging behind I by $\pi/2$ radians or 90°.

3. The applied voltage is equal to phasor sum of V_R of V_C

$$V = \sqrt{(V_R)^2 + (V_C)^2} = \sqrt{(IR)^2 + (IX_C)^2}$$

$$= I\sqrt{R^2 + X_C^2} = IZ \qquad \text{where } Z^2 = R^2 + X_C^2$$

4. The applied voltage lags behind the current by an angle ϕ

where, $$\tan \phi = \frac{V_C}{V_R} = \frac{I X_C}{I_R} = \frac{X_C}{R} = \frac{1}{\omega RC}$$

Scanned by TapScanner

$$\phi = \tan^{-1} \frac{1}{\omega RC}$$

Power factor, $\cos\phi = \dfrac{R}{Z}$

5. If instantaneous voltage is represented by

$$v = V_{max} \sin \omega t$$

then instantaneous current will be expressed as

$$i = I_{max} \sin(\omega t + \phi)$$

6. Power consumed by the circuit is given by

$$P = VI\cos\phi$$

Que 2.15. Derive expression for impedance, current, and power factor for an RLC series circuit when applied with AC voltage. Also draw vector diagram. **AKTU 2017-18(Sem-2), Marks 07**

Answer

1. Consider an AC circuit containing resistance of R ohms, inductance of L H and capacitance of C F connected in series, as shown in Fig. 2.15.1.
2. Let the current flowing through the circuit be of I amperes and supply frequency be ϕ Hz.
3. Voltage drop across resistance, $V_R = IR$ in phase with I.

   Voltage drop across inductance, $V_L = I\omega L$ leading I by $\pi/2$ radians or 90°.

   Voltage drop across capacitance, $V_C = \dfrac{I}{\omega C}$ or IX_C lagging behind I by $\pi/2$ radians or 90°.
4. The circuit can either be effectively inductive or capacitive depending upon which voltage drop (V_L or V_C) is predominant.

   Case I : When V_L is greater than V_C.

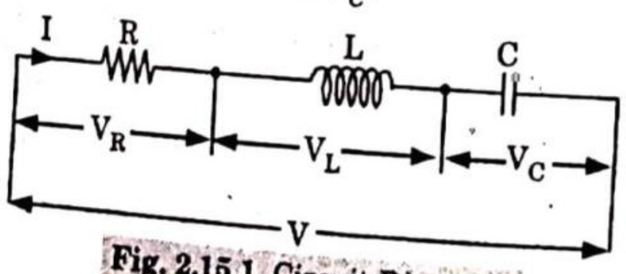

Fig. 2.15.1. Circuit Diagram.

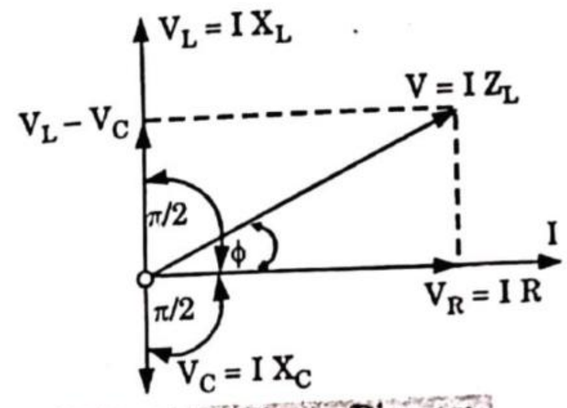

Fig. 2.15.2. Phasor Diagram.

1. $V = \sqrt{(V_R)^2 + (V_L - V_C)} = \sqrt{(IR)^2 + (IX_L - IX_C)^2} = I\sqrt{(R)^2 + (X_L - X_C)^2}$

   The term $\sqrt{R^2 + (X_L - X_C)^2}$ is known as impedance of the circuit and is represented by Z. Its unit is ohm.
2. Phase angle ϕ between voltage and current is given by

   $$\phi = \tan^{-1}\frac{V_L - V_C}{V_R} = \tan^{-1}\frac{IX_L - IX_C}{IR} = \tan^{-1}\frac{X_L - X_C}{R} = \tan^{-1}\frac{X}{R}$$

   ϕ will be positive, *i.e.*, applied voltage will lead the current if $X_L > X_C$ and ϕ will be negative, *i.e.*, applied voltage will be behind the current if $X_L < X_C$.
3. Power factor, $\cos\phi = \dfrac{R}{Z} = \dfrac{R}{\sqrt{R^2 + (X_L - X_C)^2}}$
4. Power consumed, $P = VI\cos\phi$.
5. Magnitude of effective current,

   $$I = \frac{V}{\sqrt{R^2 + \left(\omega L - \dfrac{1}{\omega C}\right)^2}}$$

   Case II : When $\omega L > \dfrac{1}{\omega C}$, the RLC circuit behaves like inductive circuit and current phasor lags the voltage phasor.

   Case III : When $\omega L < \dfrac{1}{\omega C}$, the circuit behaves as capacitive circuit and current phasor leads the voltage phasor.

I.M.P.

Que 2.16. A metal filament lamp, rated at 750 W, 100 V, is to be connected in series with a capacitor across 230 V, 50 Hz supply. Calculate the value of capacitor.

AKTU 2013-14(Sem-1), Marks 05

Scanned by TapScanner

Answer

1. Let pure capacitor C farads be connected in series with the lamp, as shown in Fig. 2.16.1.

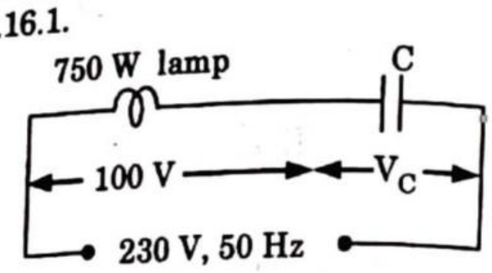

Fig. 2.16.1.

2. Since in this case voltage drop across the capacitor lags behind the current by 90° while that across the lamp will be in phase with it.

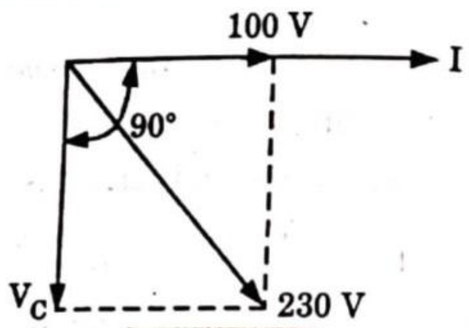

Fig. 2.16.2.

3. $$V_C = \sqrt{(230)^2 - (100)^2} = 207 \text{ V}$$

4. $$I = \frac{P}{V} = \frac{750}{100} = 7.5 \text{ A}$$

5. $$X_C = \frac{V_C}{I} = \frac{207}{7.5} = 27.6\ \Omega$$

6. $$C = \frac{1}{2\pi f X_C} = \frac{1}{2\pi \times 50 \times 27.6} = 115.33\ \mu\text{F}$$

Que 2.17. **A resistance and inductance are connected in series with voltage $v = 283 \sin 314\, t$. The current expression is found to be $i = 4 \sin (314\, t - 45°)$. Find the value of resistance, inductance and power factor.**

AKTU 2013-14(Sem-2), Marks 10

Answer

$$v = 283 \sin 314\, t \quad \text{...(2.17.1)}$$

$$i = 4 \sin (314\, t - 45°) \quad \text{...(2.17.2)}$$

1. From eq. (2.17.1) and (2.17.2) it is seen that current I lags behind the applied voltage v by $\pi/4$ radian or 45°, so phase angle = 45° (lagging).
2. Power factor of the circuit, $\cos \phi = \cos 45° = 0.707$ (lagging)

3. Circuit impedance, $Z = \frac{V_{max}}{I_{max}} = \frac{283}{4} = 70.75\ \Omega$
4. Circuit resistance, $Z = Z \cos \phi = 70.75 \times 0.707 = 50\ \Omega$
5. Circuit reactance, $X_L = Z \sin \phi = 70.75 \times \sin 45° = 50\ \Omega$
6. Frequency, $f = \frac{314}{2\pi} = 50$ Hz
7. Inductance, $L = \frac{X_L}{2\pi f} = \frac{50}{2\pi \times 50} = 0.159$ H

Que 2.18. **A series RLC circuit is composed of 10 Ω resistance, 0.1 H inductance and 50 μF capacitance. A voltage $v(t) = 141.4 \cos (100\, \pi t)$ V is impressed upon the circuit. Determine**

i. The expression for instantaneous current.

ii. The voltage drops V_R, V_L and V_C across resistor, capacitor and inductor.

iii. Draw the phasor diagram using all the voltage relations.

AKTU 2014-15(Sem-1), Marks 10

Answer

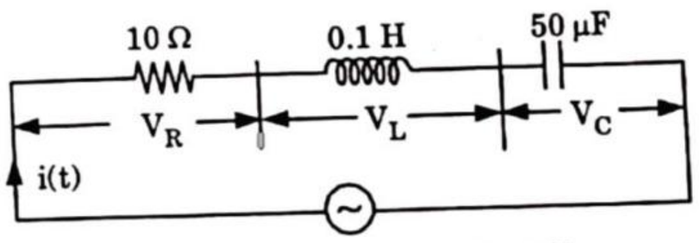

v(t) = 141.4 cos (100πt) V

Fig. 2.18.1.

1. $$X_L = \omega L = 100\pi \times 0.1 = 31.416\ \Omega$$

2. $$X_C = \frac{1}{\omega C} = \frac{1}{100\pi \times 50 \times 10^{-6}} = 63.662\ \Omega$$

3. $$Z = \sqrt{R^2 + (X_L - X_C)^2} = \sqrt{10^2 + (31.416 - 63.662)^2} = 33.76\ \Omega$$

4. Instantaneous current, $i(t) = \frac{v(t)}{Z}$

$$= \frac{141.4}{33.76} \cos (100\pi t + \phi) = 4.188 \cos (100\pi t + \phi)$$

where $$\phi = \tan^{-1} \frac{X_L - X_C}{R}$$

Scanned by TapScanner

$$= \tan^{-1}\left(\frac{31.416 - 63.662}{10}\right) = -72.77°$$

Thus $i(t) = 4.188 \cos(100\pi t - 72.77°)$ A

5. $V_R = IR = 4.188 \times 10 = 41.88$ V
$V_L = IX_L = 4.188 \times 31.416 = 131.57$ V
$V_C = IX_C = 4.188 \times 63.662 = 266.62$ V

6. **Phasor diagram :**

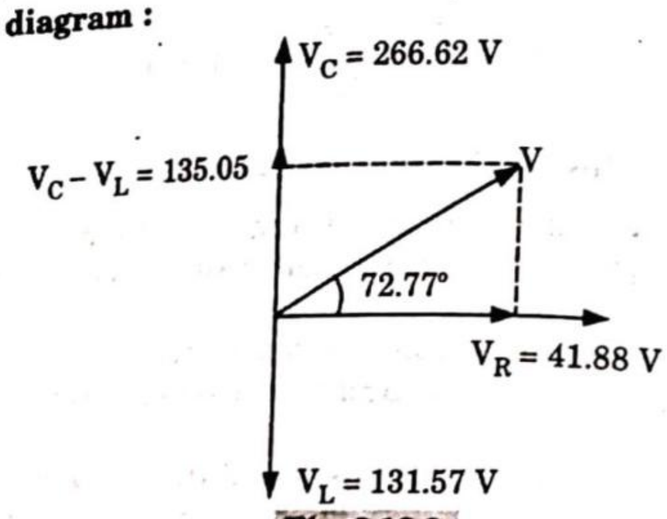

Fig. 2.18.2.

Que 2.19. **A non-inductive resistance of 10 ohm is connected in series with an inductive coil across 200 V, 50 Hz AC supply. The current drawn by the series combination is 10 amp. The resistance of coil is 2 ohms. Determine :**

i. Inductance of the coil
ii. Power factor
iii. Voltage across the coil.

AKTU 2017-18(Sem-1), Marks 07

Answer

1. Total resistance of the circuit,
R = Non-inductive resistance + Resistance of coil
$= 10 + 2 = 12\ \Omega$

2. Voltage drop across the resistance of whole circuit,
$V_R = IR = 10 \times 12 = 120$ V

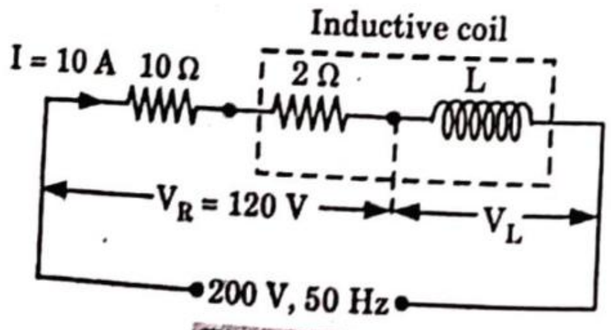

Fig. 2.19.1.

3. Let the voltage drop across the inductance of the coil be V_L volts.

Supply voltage, $V_S = \sqrt{V_R^2 + V_L^2}$

$V_L = \sqrt{V_S^2 - V_R^2} = \sqrt{200^2 - 120^2} = 160$ V

4. Inductive reactance of the coil, $X_L = \frac{V_L}{I} = \frac{160}{10} = 16\ \Omega$

5. Inductance of coil, $L = \frac{X_L}{2\pi f} = \frac{16}{2\pi \times 50} = 0.051$ H $= 51$ mH

6. Power factor of the coil $= \cos\left(\tan^{-1}\frac{16}{2}\right) = 0.124$ (lagging)

Power factor of the circuit, $\cos\phi = \frac{R}{Z} = \frac{12}{\sqrt{12^2 + 16^2}} = 0.6$ (lagging)

7. Voltage across the coil, $V_C = I\sqrt{2^2 + 16^2} = 10 \times \sqrt{260} = 161.245$ V

Que 2.20. **A 46 mH inductive coil has a resistance of 10 ohm. How much current will it draw, if connected across 100 V, 50 Hz source ? Also determine the value of capacitance that must be connected across the coil to make the power factor of the circuit to be unity.**

AKTU 2016-17(Sem-2), Marks 07

Answer

1. R and L are connected in series

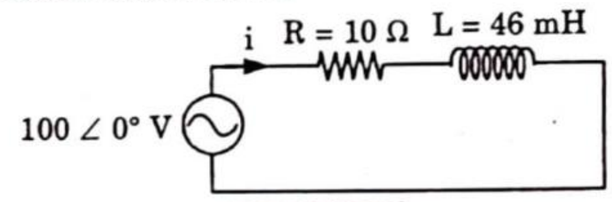

Fig. 2.20.1.

2. $X_L = 2\pi fL = 2 \times \pi \times 50 \times 46 \times 10^{-3}$
$= 14.44\ \Omega$

3. $Z = R + jX_L$
$= 10 + j14.44 = 17.56 \angle 55.30°\ \Omega$

4. $i = \frac{V}{Z} = \frac{100 \angle 0°}{17.56 \angle 55.30°} = 5.7 \angle -55.30°$ A

5. Let C is connected in series with R and L.

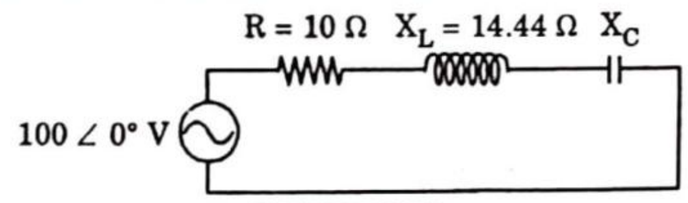

Fig. 2.20.2.

$Z = R + j(X_L - X_C)$

Scanned by TapScanner

$$\therefore \quad |Z| = \sqrt{R^2 + (X_L - X_C)^2}$$

3. Power factor = 1 $\therefore \cos\phi = 1$

$$\frac{R}{\sqrt{R^2 + (X_L - X_C)^2}} = 1$$

$$R^2 = R^2 + (X_L - X_C)^2$$

$$X_C = X_L$$

$$\frac{1}{2\pi fC} = 14.44 \quad \therefore C = 220\ \mu F$$

Que 2.21. **A series AC circuit has a resistance of 15 Ω and inductive reactance of 10 Ω. Calculate the value of a capacitor which is connected across this series combination so that system has unit power factor. The frequency of AC supply is 50 Hz.**

AKTU 2016-17(Sem-1), Marks 07

Answer

The procedure is same as Q. 2.20, Page 2–20D, Unit-2.

(Ans. $C = 318\ \mu F$**)**

Que 2.22. **Discuss the parallel RLC circuit with its phasor diagram.**

Answer

1. In the parallel RLC circuit, the supply voltage, V_s is common to all three components, the supply current I_s consists of three parts.
2. Current flowing through the resistor = I_R
   Current flowing through the inductor = I_L
   Current through the capacitor = I_C

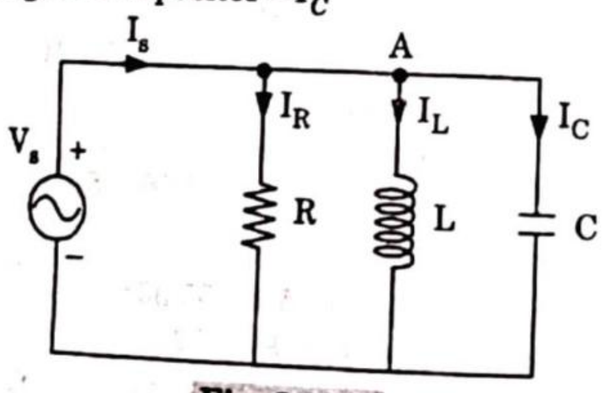

Fig. 2.22.1.

3. Impedance of a parallel RLC circuit

$$R = \frac{V}{I_R};\ X_L = \frac{V}{I_L};\ X_C = \frac{V}{I_C}$$

$$Z = \frac{1}{\sqrt{\left(\frac{1}{R}\right)^2 + \left(\frac{1}{X_L} - \frac{1}{X_C}\right)^2}}$$

$$\therefore \quad \frac{1}{Z} = \sqrt{\left(\frac{1}{R}\right)^2 + \left(\frac{1}{X_L} - \frac{1}{X_C}\right)^2}$$

4. Current for a parallel RLC circuit

$$I_s^2 = I_R^2 + (I_L - I_C)^2$$

$$I_s = \sqrt{I_R^2 + (I_L - I_C)^2}$$

$$\therefore \quad I_s = \sqrt{\left(\frac{V}{R}\right)^2 + \left(\frac{V}{X_L} - \frac{V}{X_C}\right)^2} = \frac{V}{Z}$$

Phasor diagram :

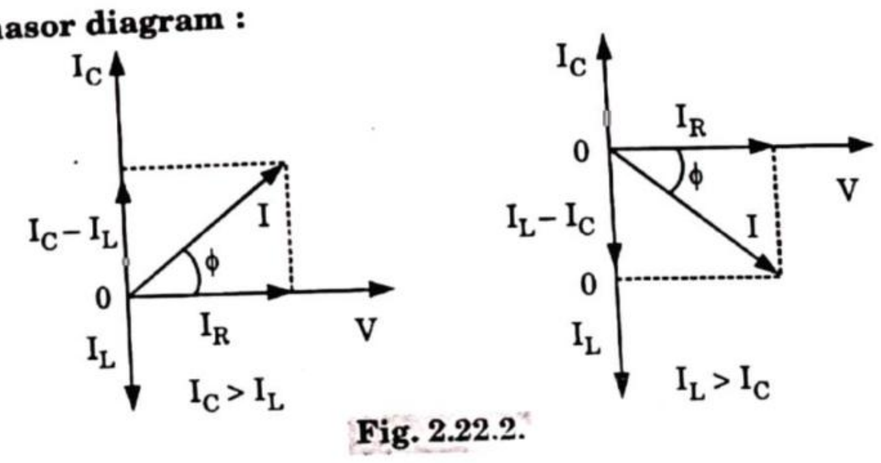

Fig. 2.22.2.

Que 2.23. **In the given parallel RLC circuit, determine $i_R(t)$, $i_L(t)$, $i_C(t)$ and $i_{CL}(t)$. Determine the phasor diagram showing all currents and voltage.**

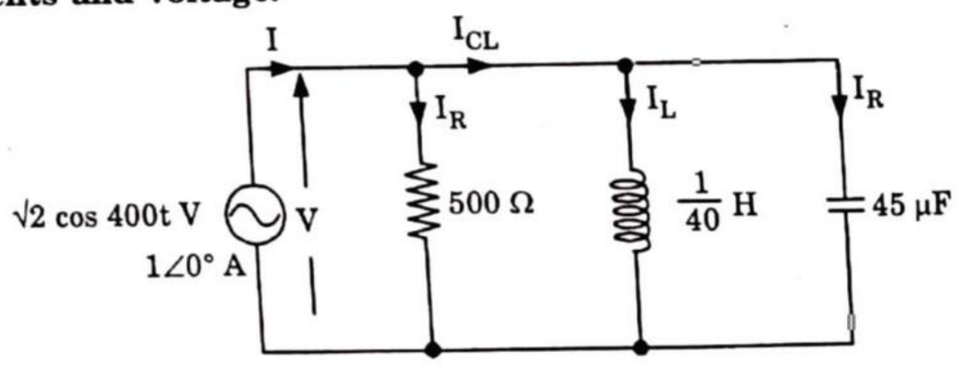

Fig. 2.23.1.

AKTU 2014-15(Sem-1), Marks 10

Answer

1. Frequency, $\omega_o = 400$ rad/sec
2. $\omega L = 400 \times \frac{1}{40} = 10\ \Omega$
3. $\frac{1}{\omega C} = \frac{10^6}{400 \times 250} = 10\ \Omega$

Scanned by TapScanner

4. As $\omega L = \dfrac{1}{\omega C}$, ω is the resonant frequency

$\omega = \omega_o = 400$ rad/sec

5. Therefore $I_{CL} = 0$ as $I_L + I_C = 0$ (at resonance)

6. Thus $I_R = I = 1\angle 0°$ A

7. $i_R(t) = \sqrt{2}\cos 400t$ A

8. $v = 500\, I_R = 500\angle 0°$.

9. $v(t) = 500\sqrt{2}\cos 400t$ V

10. Then $I_L = \dfrac{V}{j\omega L} = \dfrac{-j500}{10} = 50\angle -90°$ A

11. $i_L(t) = 50\sqrt{2}\cos(400\,t - 90°)$

12. $I_C = j\omega C, V = 50\angle 90°$ A

13. $i_C(t) = 50\sqrt{2}\cos(400t + 90°)$

14. $I_{CL} = I_L + I_C = -j50 + j50 = 0$ A

Therefore circulating current = 50 A

15. Phasor diagram is shown in Fig. 2.23.2.

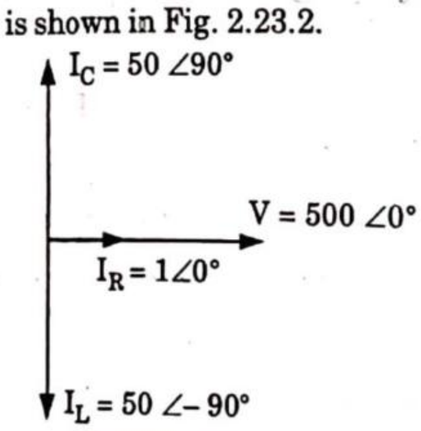

Fig. 2.23.2.

PART-3

Apparent, Active and Reactive Power, Power Factor, Power Factor Improvement.

CONCEPT OUTLINE : PART-3

- **Power factor :** It may be defined as

1. Cosine of the phase angle between voltage and current or,
2. The ratio of the resistance to the impedance or,
3. The ratio of true power to the apparent power.

Questions-Answers

Long Answer Type and Medium Answer Type Questions

Que 2.24. **Define the following :**

1. Apparent power
2. True power
3. Reactive power
4. Power factor.

Answer

1. **Apparent power :** The product of rms values of current and voltage, *VI* is called the apparent power and is measured in volt-amperes or kilo-volt amperes (kVA).
2. **True power :** The true power in an AC circuit is obtained by multiplying the apparent power by the power factor and is expressed in watts or kilo-watts (kW).
3. **Reactive power :** The product of apparent power, *VI* and the sine of the angle between voltage and current, sin ϕ is called the reactive power. This is also known as wattless power and is expressed in reactive volt-amperes or kilo-volt amperes reactive (kVAR).

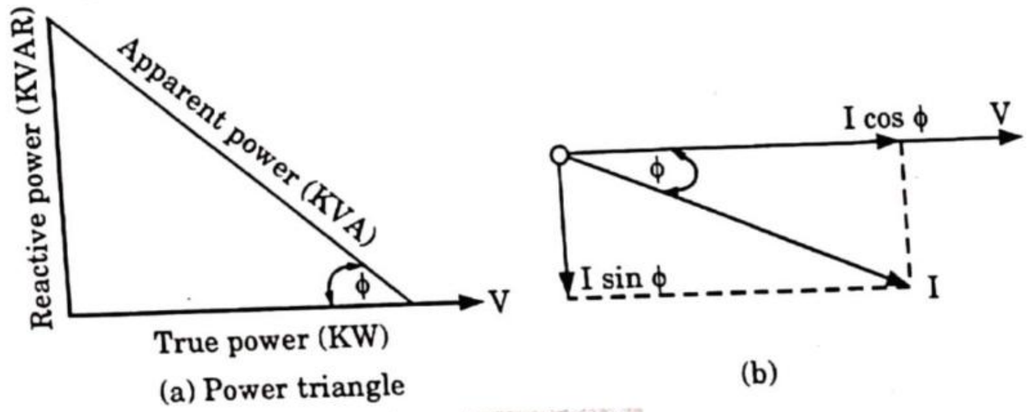

(a) Power triangle (b)

Fig. 2.24.1.

4. **Power factor** may be defined as
   i. Cosine of the phase angle between voltage and current or
   ii. The ratio of the resistance to impedance or
   iii. The ratio of true power to apparent power.

Que 2.25. **Two impedances $Z_1 = 5 + j10\ \Omega$ and $Z_2 = 10 - j15\ \Omega$ are connected in parallel. If total current is 20 A, then find :**

1. **Current taken by each branch**
2. **Power factor**
3. **Power consumed in each branch.**

AKTU 2013-14(Sem-1), Marks 05

Scanned by TapScanner

Answer

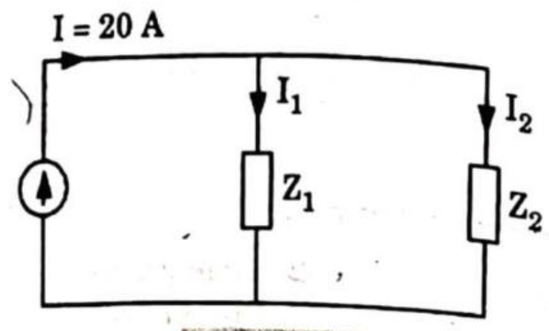

Fig. 2.25.1.

1. Equivalent impedance of parallel combination

$$Z = \frac{Z_1 Z_2}{Z_1 + Z_2} = \frac{(5 + j10)(10 - j15)}{(5 + j10) + (10 - j15)}$$

$$Z = \frac{(5 + j10)(10 - j15)}{(15 - 5j)}$$

$$I = 20 + j0$$

2. **Current taken by each branch :**

$$I_1 = \frac{IZ}{Z_1} = (20 + j0)\frac{(5 + j10)(10 - j15)}{(15 - j5)(5 + j10)}$$

$$= \frac{20(10 - j15)}{(15 - j5)} = \frac{360.4 \angle -56.31°}{15.81 \angle -18.43°}$$

$$= 22.79 \angle -37.88° \text{ A}$$

$$I_2 = \frac{IZ}{Z_2} = (20 + j0)\left[\frac{(5 + j10)(10 - j15)}{(15 - j5)(10 - j15)}\right]$$

$$= 20\frac{(5 + j10)}{15 - j5} = \frac{223.6 \angle 63.43}{15.81 \angle -18.43}$$

$$= 14.14 \angle 81.86° \text{ A}$$

3. **Power factor :**

Circuit current, $I = 20 + j0$

Phase angle, $\phi = 0$

Power factor, $\cos\phi = \cos(0) = 1$.

4. **Power consumed in each branch :**

Power consumed in branch 1, $P_1 = I_1^2 R_1 = (22.79)^2 \times 5 = 2596.9$ W

Power consumed in branch 2, $P_2 = I_2^2 R_2 = (14.14)^2 \times 10 = 1999.3$ W

Que 2.26. **A coil having a resistance of 30 Ω and inductance of 0.05 H is connected in series with a capacitor of 100 μF. The whole circuit has been connected to a single phase 230 V, 50 Hz supply. Calculate impedance, current, power factor, power and apparent power of the circuit.**

AKTU 2014-15(Sem-2), Marks 10

Answer

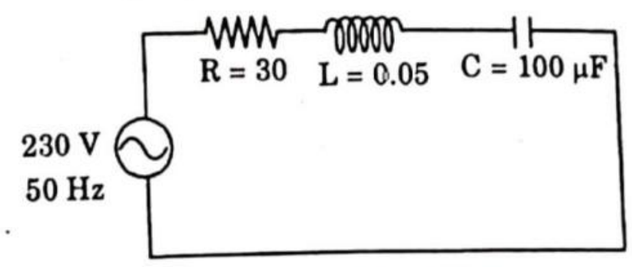

Fig. 2.26.1.

1. Inductive reactance of the circuit,

$$X_L = 2\pi fL = 2\pi \times 50 \times 0.05 = 15.7\ \Omega$$

2. Capacitive reactance of the circuit,

$$X_C = \frac{1}{2\pi fC} = \frac{1}{2\pi \times 50 \times 100 \times 10^{-6}} = 31.83\ \Omega$$

3. Magnitude of impedance, $Z = \sqrt{R^2 + (X_L - X_C)^2}$

$$= \sqrt{(30)^2 + (15.7 - 31.83)^2} = 34.061\ \Omega$$

$$\phi = \tan^{-1}\left(\frac{X_L - X_C}{R}\right) = \tan^{-1}\left(\frac{15.7 - 31.83}{30}\right)$$

$$= -28.26°$$

Hence impedance, $Z = 34.061 \angle -28.26°\ \Omega$.

4. Current, $I = \frac{V}{Z} = \frac{230 \angle 0°}{34.061 \angle -28.26°} = 6.75 \angle 28.26°$ A

5. Power factor, $\cos\phi = \cos(-28.26°) = 0.8808$ (leading)

6. Power, $VI\cos\phi = 230 \times 6.75 \times 0.88 = 1367.45$ W

7. Apparent power, $VI = \frac{230}{\sqrt{2}} \times \frac{6.75}{\sqrt{2}}$

$$= 776.25 \text{ VA}.$$

Que 2.27. **What are the causes of low power factor in supply system? Discuss its effect and how power factor is improved ?**

AKTU 2015-16(Sem-1), Marks 10

OR

Define power factor. Discuss reasons for poor power factor. How can power factor be improved ? **AKTU 2016-17(Sem-2), Marks 07**

Scanned by TapScanner

OR

Explain the causes of low power factor. How can it be improved?

AKTU 2017-18(Sem-1), Marks 1

OR

What are causes and disadvantages of low power factor?

AKTU 2013-14(Sem-1), Marks 6

Answer

A. **Power factor :** Refer Q. 2.24, Page 2–24D, Unit-2.

B. **Causes of low power factor :**

1. All AC motor and transformers operate at low power factor.
2. Arc lamps operate at low power factor (lagging) due to typic characteristic of arc.
3. Industrial heating furnaces and induction furnace operates at low pow factor.
4. With increase in supply voltage usually occurs at lunch hour, night hou etc., the magnetising current of inductive reactance increases and th power factor of the plant as whole becomes lower.

C. **Power factor can be improved by :**

1. Using induction motor with phase advancers.
2. Connecting the static capacitors in parallel with the equipment operati at lagging power factor such as induction motors, fluorescent tubes etc

D. **Problems (Disadvantages) of low power factor :**

1. Low power factor results in large voltage drop in generator, transmissio lines, transformer and distributors which results in poor regulation. Hence, extra equipments are required to make voltage permissible.
2. For the same power to be transmitted at low power factor, the transmission cable has to carry more current. Thus it requires more conductor material for cable to deliver the load at low power factor.
3. Low power factor increases the capital cost for transformers, transmission lines, cables and distributors etc.

PART-4

Concept of Resonance in Series and Parallel Circuits, Bandwidth and Quality Factor.

CONCEPT OUTLINE : PART-4

- Resonance is the term employed for describing the steady state operation of a circuit or system at that frequency for which the resultant response is in time phase with the source function despite the presence of energy-storing elements.
- An RLC series circuit is said to be in electrical resonance when $X_L = X_C$, *i.e.*, the net reactance $X = 0$
- A parallel AC circuit is said to be in resonance when it draws no reactive current.

Questions-Answers

Long Answer Type and Medium Answer Type Questions

Que 2.28. **Explain resonance in a series RLC circuit with the help of impedance v/s frequency diagram and derive an expression for resonant frequency. Write properties of series resonance circuit.**

AKTU 2015-16(Sem-2), Marks 10

OR

Derive the condition for resonance in series RLC circuit. What are the different applications of resonance ?

AKTU 2013-14(Sem-2), Marks 10

Answer

A.

1. Consider an AC circuit containing a resistance R, inductance L and a capacitance C connected in series, as shown in Fig. 2.28.1.
2. Impedance of the circuit, $Z = \sqrt{R^2 + (X_L - X_C)^2} = \sqrt{R^2 + \left(\omega L - \frac{1}{\omega C}\right)^2}$
3. If resonant frequency is denoted by f_r, then

$$X_L = \omega L = 2\pi f_r L$$

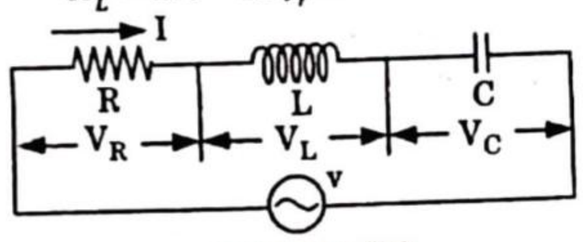

Fig. 2.28.1.

Scanned by TapScanner

and $$X_C = \frac{1}{2\pi f_r C}$$

4. Since for resonance $X_L = X_C$

$$\therefore \quad 2\pi f_r L = \frac{1}{2\pi f_r C}$$

$$f_r = \frac{1}{2\pi\sqrt{LC}}$$

$$\omega_r = \sqrt{1/LC} \quad \text{...(2.28}$$

5. From eq. (2.28.1) it is obvious that the value of resonance freque depends on the parameters of the two energy-storing elements.

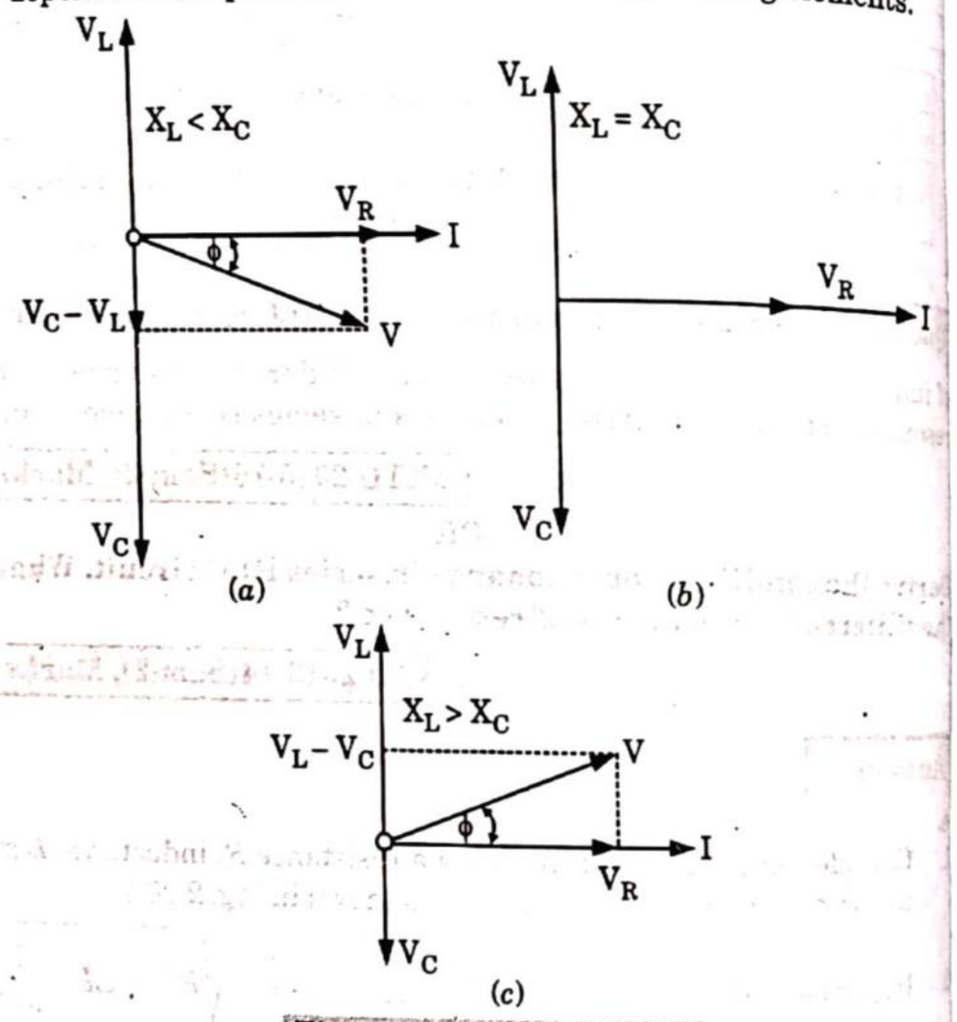

Fig. 2.28.2. Phasor diagram.

B. Property : At resonance,

1. Net reactance is zero, *i.e.*, $X = 0$.
2. Impedance of the circuit, $Z = R$.
3. The current flowing through the circuit is maximum and in phase wi the applied voltage. The magnitude of the current will be equal to V/
4. The voltage drop across the inductance is equal to the voltage dr across capacitance.
5. The power factor is unity.

C. Impedance *v/s* frequency diagram :

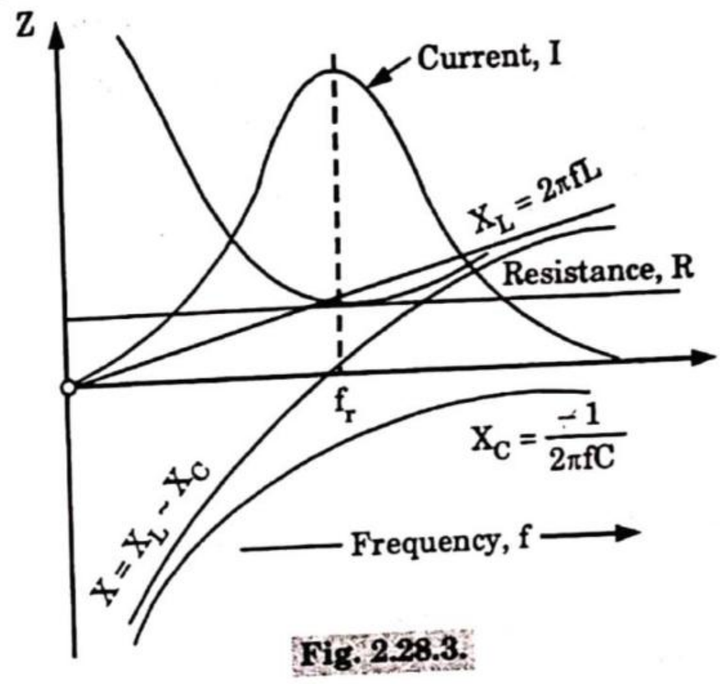

Fig. 2.28.3.

D. Applications of resonance :

1. Resonance circuits are used in tuning applications for radio and TV.
2. These circuits are also used in oscillators.

Que 2.29. Derive the expression of half power frequencies in terms of resonant frequency f_r.

OR

Derive bandwidth for series resonance.

AKTU 2013-14(Sem-1), Marks 05

OR

Derive resonance conditions in series RLC circuit. Also derive the expression for bandwidth. **AKTU 2014-15(Sem-2), Marks 10**

Answer

A. Resonance condition : Refer Q. 2.28, Page 2–28D, Unit-2.

B. Derivation of half power frequencies and bandwidth :

1. Consider resonance curve as shown in Fig. 2.29.1.

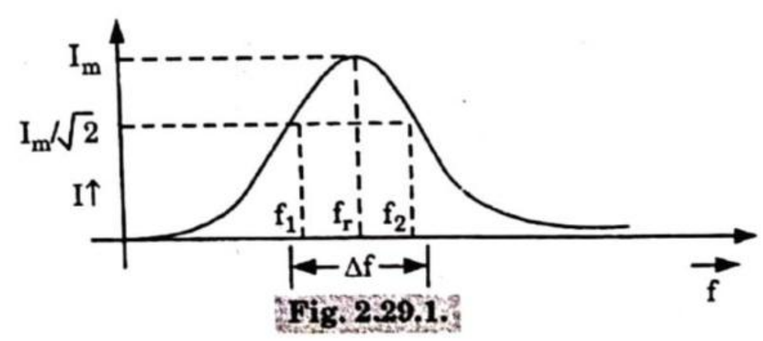

Fig. 2.29.1.

Scanned by TapScanner

2. Cut off frequency or half power frequency is the frequency where current in the circuit is $1/\sqrt{2}$ times to maximum value of the current.

$\therefore$ At $f_1, X_L < X_C$ whereas at $f_2, X_C < X_L$

3. Impedance at resonance (f_r) frequency

$$Z = R = \frac{V}{I_m}$$

At f_1 impedance, $Z_1 = \frac{V}{I_1} = \frac{V}{I_m/\sqrt{2}} = \sqrt{2}\frac{V}{I_m}$

$$Z_1 = \sqrt{2}R \quad ...(2.29.1)$$

Similarly at f_2, $Z_2 = \frac{V}{I_2} = \frac{V}{I_m/\sqrt{2}} = \sqrt{2}\frac{V}{I_m}$

$$Z_2 = \sqrt{2}R \quad ...(2.29.2)$$

4. At f_1, impedance

$$Z_1 = \sqrt{R^2 + (X_L - X_C)^2}$$

5. Let $X_L - X_C = X$

$\therefore$ $$Z_1 = \sqrt{R^2 + X^2} \quad ...(2.29.3)$$

6. From eq. (2.29.1) and (2.29.3),

$\therefore$ $$\sqrt{2}R = \sqrt{R^2 + X^2}$$

$\therefore$ $$R = X$$

7. But since $X_L < X_C$, X is negative.

$\therefore$ $$R = -X$$

$$-R = X_L - X_C$$

$$-R = \omega_1 L - \frac{1}{\omega_1 C}$$

$\therefore$ $$\omega_1^2 LC - 1 = -RC\omega_1$$

$$\omega_1^2 LC + RC\omega_1 - 1 = 0$$

$$\omega_1^2 + \frac{RC}{LC}\omega_1 - \frac{1}{LC} = 0$$

$$\omega_1^2 + \left(\frac{R}{L}\right)\omega_1 - \frac{1}{LC} = 0 \quad ...(2.29.4)$$

$\therefore$ $$\omega_1 = \frac{-\frac{R}{L} \pm \sqrt{\frac{R^2}{L^2} + \frac{4}{LC}}}{2}$$

i.e., $$\omega_1 = -\frac{R}{2L} \pm \sqrt{\frac{R^2}{4L^2} + \frac{1}{LC}}$$

8. Let $$\frac{R}{2L} = \alpha \quad ...(2.29.5)$$

And $$\frac{1}{\sqrt{LC}} = \omega_r \quad ...(2.29.6)$$

$\therefore$ $$\omega_1 = -\alpha \pm \sqrt{\alpha^2 + \omega_r^2} \quad ...(2.29.7)$$

9. Similarly at f_2,

$$R = X$$

$$X_L - X_C = R$$

$$\omega_2 L - \frac{1}{\omega_2 C} = R$$

$$\omega_2^2 LC - 1 - RC\omega_2 = 0$$

$$\omega_2^2 - \frac{R}{L}\omega_2 - \frac{1}{LC} = 0$$

$$\omega_2 = \frac{\frac{R}{L} \pm \sqrt{\frac{R^2}{L^2} - 4\left(-\frac{1}{LC}\right)}}{2}$$

$$\omega_2 = \frac{R}{2L} \pm \sqrt{\frac{R^2}{4L^2} + \frac{1}{LC}}$$

From eq. (2.29.5) and (2.29.6)

$$\omega_2 = \alpha \pm \sqrt{\alpha^2 + \omega_r^2} \quad ...(2.29.8)$$

10. $$\Delta\omega = \omega_2 - \omega_1 = 2\alpha = 2\left(\frac{R}{2L}\right) = \frac{R}{L}$$

11. $\therefore$ **Bandwidth,** $\Delta f = \frac{\Delta\omega}{2\pi} = \frac{R}{2\pi L}$

$\therefore$ From Fig. 2.29.1 $f_1 = f_r - \frac{\Delta f}{2}$ ...(2.29.9)

and $f_2 = f_r + \frac{\Delta f}{2}$ ...(2.29.10)

eq. (2.29.9) and (2.29.10) are the expressions for upper and lower cut off frequencies, respectively.

Que 2.30. **Explain series resonance in RLC circuit. What are the bandwidth and quality factor of the circuit ? Derive expressions for lower and upper half power frequencies for a series RLC circuit.**

AKTU 2016-17(Sem-2), Marks 07

OR

Derive the expression of Bandwidth of a series RLC circuit. Explain the relationship between bandwidth and quality factor.

AKTU 2017-18(Sem-1), Marks 07

Scanned by TapScanner

Answer

A. Resonance condition in series RLC circuit : Refer Q. 2.28, Page 2–28D, Unit-2.

B. Bandwidth of RLC series circuit : Refer Q. 2.29, Page 2–30D, Unit-2.

C. Lower and upper half power frequencies for series RLC circuit : Refer Q. 2.29, Page 2–30D, Unit-2.

D. Quality factor :

1. The Q-factor of an RLC series circuit is the voltage magnification that the circuit produces at resonance.
2. Since current at resonance is maximum, supply voltage, $V = I_{max}R$
3. Voltage across inductance or capacitance $= I_{max}X_L = I_{max}X_C$
4. Voltage magnification $= \dfrac{I_{max}X_L}{I_{max}R} = \dfrac{X_L}{R}$

$$= \frac{\omega_r L}{R}$$

Q factor at resonance,

$$Q_r = \frac{\omega_r L}{R} = \frac{2\pi f_r L}{R} = \frac{2\pi L}{R} \times \frac{1}{2\pi\sqrt{LC}} = \frac{1}{R}\sqrt{\frac{L}{C}}$$

$$\because \quad f_r = \frac{1}{2\pi\sqrt{LC}}$$

E. Relation between bandwidth and Quality Factor :

Q factor is also defined as the ratio of resonant frequency to bandwidth, *i.e.*,

$$Q_r = \frac{f_r}{\Delta f} = \frac{\frac{1}{2\pi\sqrt{LC}}}{R/2\pi L} = \frac{1}{R}\sqrt{\frac{L}{C}}$$

where, $\Delta f = \dfrac{R}{2\pi L}$ = Bandwidth.

Que 2.31. Voltages across R, L, C connected in series are 5, 8 and 10 volt respectively. Calculate the value of supply voltage at 50 Hz. Also find the frequency at which this circuit would resonate.

Answer

1. The supply voltage is equal to the phasor sum of V_R, V_L and V_C and is given by

$$V = \sqrt{V_R^2 + (V_L - V_C)^2}$$

$$V = \sqrt{5^2 + (8-10)^2}$$

$$V = \sqrt{25+4}$$

$$V = \sqrt{29} = 5.385 \text{ V}$$

2. $V_L = I\omega L = 8$ ...(2.31.1)
3. $V_C = \dfrac{I}{\omega C} = 10$ ...(2.31.2)
4. Dividing eq. (2.31.2) by eq. (2.31.1)

$$\frac{1}{\omega C} \times \frac{1}{\omega L} = \frac{10}{8}$$

$$\frac{1}{\omega^2 LC} = \frac{10}{8}$$

$$\frac{1}{LC} = \frac{10}{8} \times (2\pi f)^2$$

Putting $f = 50$ Hz, we get

$$\frac{1}{LC} = 123370.05$$

$$\frac{1}{\sqrt{LC}} = 351.240$$

5. Since resonant frequency, $f_r = \dfrac{1}{2\pi\sqrt{LC}}$, we get

$$\frac{1}{2\pi\sqrt{LC}} = \frac{351.240}{2\pi} = 55.901 \text{ Hz}$$

Que 2.32. Derive as expression for parallel resonance and mention its salient features. **AKTU 2017-18(Sem-2), Marks 07**

Answer

A. Derivation :

1. Consider a coil in parallel with a condenser, as shown in Fig. 2.32.1.
2. Let the coil be of resistance R ohms and inductance L henrys and the condenser of resistance R ohms and capacitance C farads.

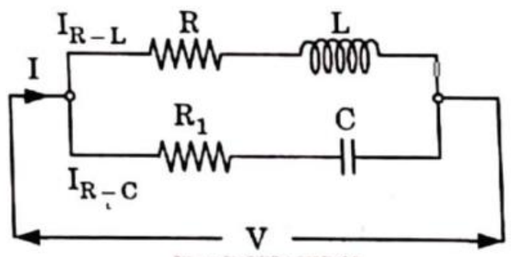

Fig. 2.32.1.

3. Such a circuit is said to be in electrical resonance when the reactive (or wattless) component of line current becomes zero. The frequency at which this happens is known as resonant frequency.

Scanned by TapScanner

4. Circuit will be in electrical resonance if reactive component of R-L branch current, $I_{R-L} \sin \phi_{R-L}$ = Reactive component of R-C branch current, $I_{R-C} \sin \phi_{R-C}$.

5. Now since $I_{R-L} = \dfrac{V}{\sqrt{R^2 + (\omega_r L)^2}}$

$$\text{and } \sin \phi_{R-L} = \frac{X_L}{Z_{R-L}} = \frac{\omega_r L}{\sqrt{R^2 + (\omega_r L)^2}}$$

$$I_{R-C} = \frac{V}{Z_{R-C}} = \frac{V}{\sqrt{R_1^2 + \left(\dfrac{1}{\omega_r C}\right)^2}}$$

and $$\sin \phi_{R-C} = \frac{X_C}{Z_{R-C}} = \frac{1/\omega_r C}{\sqrt{R_1^2 + \left(\dfrac{1}{\omega_r C}\right)^2}}$$

$$\therefore \frac{V}{\sqrt{R^2 + (\omega_r L)^2}} \times \frac{\omega_r L}{\sqrt{R^2 + (\omega_r L)^2}} = \frac{V}{\sqrt{R_1^2 + \left(\dfrac{1}{\omega_r C}\right)^2}} \times \frac{1/\omega_r C}{\sqrt{R_1^2 + \left(\dfrac{1}{\omega_r C}\right)^2}}$$

$$\frac{\omega_r L}{R^2 + (\omega_r L)^2} = \frac{1/\omega_r C}{R_1^2 + (1/\omega_r C)^2}$$

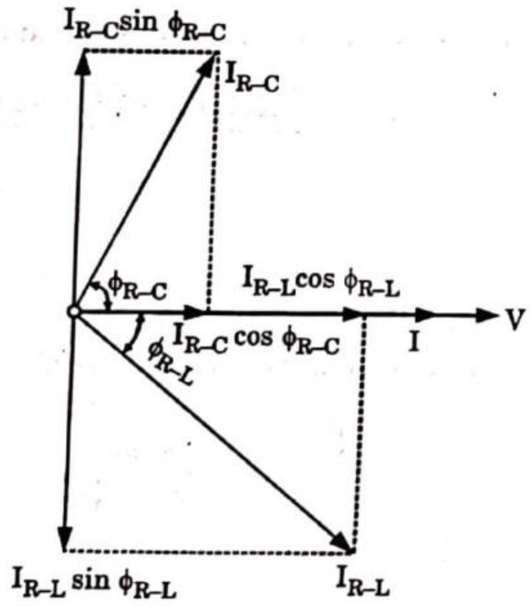

Fig. 2.32.2.

$$\frac{\omega_r L}{R^2 + \omega_r^2 L^2} = \frac{\omega_r C}{\omega_r^2 R_1^2 C^2 + 1}$$

$$L(\omega_r^2 R_1^2 C^2 + 1) = C(R^2 + \omega_r^2 L^2)$$

$$\omega_r^2 L C(R_1^2 C - L) = CR^2 - L$$

$$\omega_r = \frac{1}{\sqrt{LC}} \sqrt{\frac{CR^2 - L}{CR_1^2 - L}}$$

Resonant frequency, $f_r = \dfrac{1}{2\pi} \omega_r$

$$= \frac{1}{2\pi\sqrt{LC}} \sqrt{\frac{CR^2 - L}{CR_1^2 - L}} \quad \text{...(2.32.1)}$$

6. If resistance of capacitor is negligible, *i.e.*, $R_1 = 0$, as is usually the case,

Resonant frequency, $f_r = \dfrac{1}{2\pi\sqrt{LC}} \sqrt{1 - \dfrac{CR^2}{L}} = \dfrac{1}{2\pi} \sqrt{\dfrac{1}{LC} - \dfrac{R^2}{L^2}}$ ...(2.32.2)

7. If resistance of coil R is zero

Resonant frequency, $f_r = \dfrac{1}{2\pi} \sqrt{\dfrac{1}{LC}}$ ...(2.32.3)

B. Features of current or parallel resonance :

1. Net susceptance is zero.
2. The admittance is equal to conductance.
3. Reactive or wattless component of line current is zero, hence circuit power factor is unity.
4. Line current is minimum and is equal to $\dfrac{V}{L/CR}$ in magnitude and is in phase with the applied voltage.
5. Frequency is equal to $\dfrac{1}{2\pi} \sqrt{\dfrac{1}{LC} - \dfrac{R^2}{L^2}}$ *Hz*.

Que 2.33. Derive the quality factor of the parallel RLC circuit at resonance.

AKTU 2014-15(Sem-1), Marks 10

Answer

1. Consider a current excited RLC parallel network

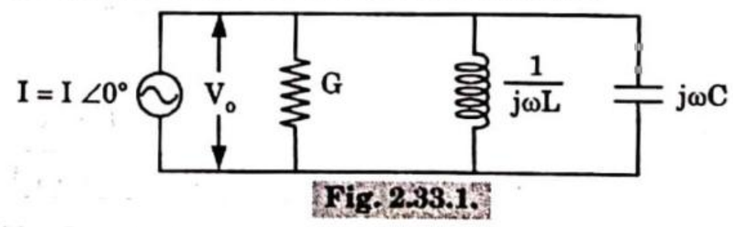

Fig. 2.33.1.

2. Let, $i(t) = I_m \cos \omega_o t$
3. At resonance condition, the currents in inductance and capacitance cancel themselves out and the circuit current I flow in the conductance.

Scanned by TapScanner

4. The corresponding voltage is (at resonance)

$$v(t) = \frac{i(t)}{G} = \frac{I_m}{G} \cos \omega_o t$$

5. The instantaneous energy stored in the capacitance is

$$w_C(t) = \frac{1}{2} Cv^2 = \frac{I_m^2 C}{2G^2} \cos^2 \omega_o t$$

6. The instantaneous energy stored in the inductor is

$$w_L(t) = \frac{1}{2} Li^2 = \frac{1}{2} L \left(\frac{1}{L} \int_0^L v dt \right)^2$$

$$= \frac{I_m^2 C}{2G^2} \sin^2 \omega_o t$$

7. Total instantaneous energy stored in C and L is

$$w(t) = w_C(t) + w_L(t) = \frac{I_m^2 C}{2G^2} \cos^2 \omega_o t + \frac{I_m^2 C}{2G^2} \sin^2 \omega_o t$$

$$= \frac{I_m^2 C}{2G^2}$$

8. Average power dissipated by the conductance

$$P_G = \frac{I_m^2 C}{2G^2}$$

9. Energy dissipated in one cycle

$$P_{GT} = \frac{1}{f_0} \frac{I_m^2}{2G} = \frac{2\pi}{\omega_o} \frac{I_m^2}{2G}$$

10. Quality factor, $Q_0 = 2\pi \left[\frac{\text{Maximum energy stored per period}}{\text{Total energy lost per period}} \right]$

$$Q_0 = 2\pi \left[\left(\frac{I_m^2 C}{2G^2} \right) \div \left(\frac{2\pi}{\omega_o} \frac{I_m^2}{2G} \right) \right]$$

$$Q_0 = \frac{\omega_o C}{G} = \omega_o RC$$

Que 2.34. **Explain parallel resonance. A circuit of a resistance of 20 Ω, and inductance of 0.3 H and a variable capacitance in series across a 220 V, 50 Hz supply. Calculate :**

A. The value of capacitance to produce resonance.

B. The voltage across the capacitance and inductance.

C. The Q-factor of the circuit. **AKTU 2014-15(Sem-2), Marks 10**

Answer

A. Parallel Resonance : Refer Q. 2.32, Page 2–34D, Unit-2.

B. Numerical :

1. For resonance, $X_L = X_C$

$$2\pi fL = \frac{1}{2\pi fC}$$

$$(2\pi f)^2 L = \frac{1}{C}$$

$$C = 3.38 \times 10^{-5} \text{ F}$$

2. $$Q\text{-factor} = \frac{1}{R}\sqrt{\frac{L}{C}} = \frac{1}{20}\sqrt{\frac{0.3}{3.38 \times 10^{-5}}} = 4.7105$$

3. $$I = \frac{V}{R}$$

$$I = \frac{220}{20}$$

$$I = 11 \text{ A}$$

4. Voltage across inductor $(V_L) = I\omega L$

$$= 11 \times 2 \times 3.14 \times 50 \times 0.3 = 1036.2 \text{ V}$$

5. Voltage across capacitor $(V_C) = \frac{I}{\omega C}$

$$= \frac{11}{2 \times 3.14 \times 50 \times 3.38 \times 10^{-5}}$$

$$= 1036.44 \text{ V}$$

Que 2.35. **What do you understand by "series resonance" and "parallel resonance" ? What are the applications of tank circuits ?**

AKTU 2016-17(Sem-1), Marks 07

Answer

A. Series resonance : Refer Q. 2.28, Page 2–28D, Unit-2.

A. Parallel resonance : Refer Q. 2.32, Page 2–34D, Unit-2.

C. Applications of tank circuits :

1. A tank circuit can be used for stabilize the electrical frequency of an AC oscillator circuit.
2. The frequency set by the tank circuit is solely dependent upon the value of L and C and not on the magnitudes of voltage or current present in the oscillations.

Que 2.36. **Derive the expression of resonant frequency of parallel RLC circuit. In series-parallel circuit A and B are in series with C. The impedances are :**
$Z_A = 4 + j3\ \Omega$, $Z_B = 4 - j5\ \Omega$, $Z_C = 2 + j8\ \Omega$. If the current $I_C = (25 + j0)$, calculate :

Scanned by TapScanner

i. **Branch voltage**
ii. **Branch current**
iii. **Total power**
iv. **Phasor diagram.**

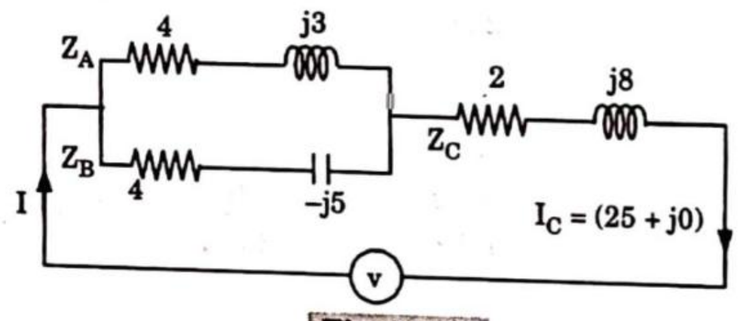

Fig. 2.36.1.

AKTU 2015-16(Sem-1), Marks 15

Answer

A. **Parallel RLC circuit :** Refer Q. 2.32, Page 2–34D, Unit-2.

B. **Numerical :**

1. The circuit is shown in Fig. 2.36.1.

$$Z_A = (4 + j3) = 5\angle 36.87°$$
$$Z_B = (4 - j5) = 6.4\angle -51.34°$$
$$Z_C = (2 + j8) = 8.25\angle 76°$$
$$I_C = (25 + j0) = 25\angle 0°$$

2. $$V_C = I_C Z_C = 206\angle 76°$$

3. $$Z_{AB} = \frac{(4 + j3)(4 - j5)}{(8 - j2)} = \frac{31 - j8}{8 - j2} = 3.88 - j0.029$$

4. $$V_{AB} = I_C Z_{AB} = 25\angle 0 \times 3.88\angle -0.43° = 97\angle -0.428°$$

5. $$Z = Z_C + Z_{AB} = (2 + j8) + 3.88 - j0.02$$
$$= 5.88 + j7.98 = 9.91\angle 53.61°$$

6. $$V = I_C Z = 25\angle 0° \times 9.91\angle 53.61°$$
$$= 247.75\angle 53.61°$$

7. $$I_A = \frac{V_{AB}}{Z_A} = \frac{97\angle -0.43°}{5\angle 36.52°} = 19.4\angle -37.3°$$

8. $$I_B = \frac{V_{AB}}{Z_B} = \frac{97\angle -0.43°}{6.4\angle -51.34°} = 15.15\angle 50.91°$$

9. Various voltages and currents are shown in Fig. 2.36.2. Powers would be calculated by using voltage conjugates.

10. Power for whole circuit is

$$P = VI_C = 247.75\angle 53.61° \times 25\angle 0°$$
$$= 6193.75\angle 53.61°$$

$$= 6193.75 (\cos 53.61° - j \sin 53.61°)$$
$$= 3674.62 - j4985.95$$

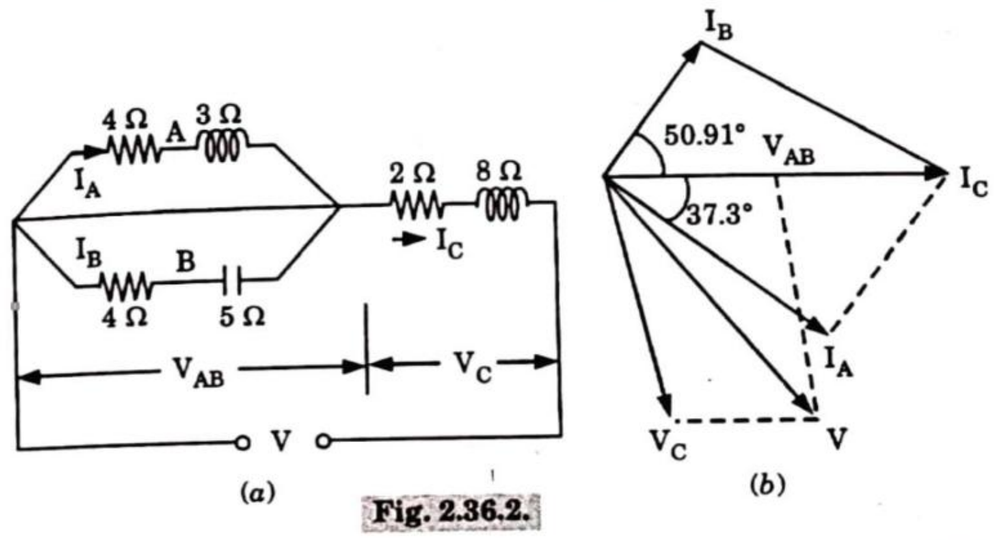

Fig. 2.36.2.

PART-5

Three Phase Balanced Circuits, Voltage and Current Relations in Star and Delta Connections.

CONCEPT OUTLINE : PART-5

i. **Star-connected system :** It is obtained by joining together similar ends, either the start or the finish, the other ends are joined to the line wires. The common point at which similar ends are connected is called the neutral or star point.

ii. **Delta-connected system :** It is obtained when the starting end of one coil is joined to the finishing end of another coil.

Questions-Answers

Long Answer Type and Medium Answer Type Questions

Que 2.37. **Prove the voltage and current relations in *Y*-connected system.**

Answer

1. Consider a balanced load Z_{ph} connected in *Y*-connection. The supply to this load is assumed to be balanced.
2. Phase to neutral voltage, *i.e.*, phase voltages are

$$V_{ph} = V_{RN} = V_{YN} = V_{BN} \quad ...(2.37.1)$$

Scanned by TapScanner

And line to line voltages *i.e.*, line voltages are

$$V_L = V_{RY} = V_{YB} = V_{BR} \quad ...(2.37.2)$$

3. Now, line voltage $\vec{V}_{RY} = \vec{V}_{RN} - \vec{V}_{YN}$

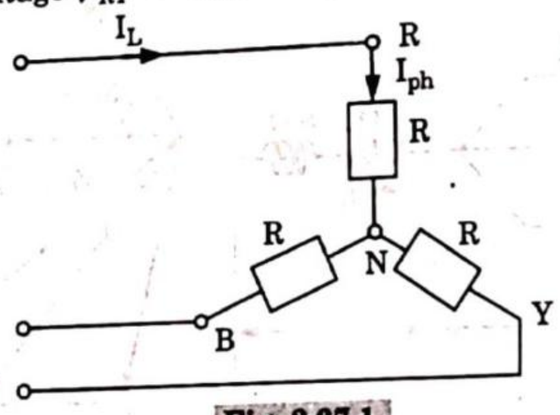

Fig. 2.37.1.

4. Magnitude of $\vec{V}_{RY}$

$$|\vec{V}_{RY}| = \sqrt{V_{RN}^2 + V_{YN}^2 + 2V_{RN}\,V_{YN}\cos 60°} \quad ...(2.37.3)$$

From eq. (2.37.1), (2.37.2) and (2.37.3)

$$V_L = \sqrt{3V_{ph}^2}$$

$$V_L = \sqrt{3}\ V_{ph}$$

5. From the Fig. 2.37.1 of star - connected load it is clear that $I_L = I_{ph}$.

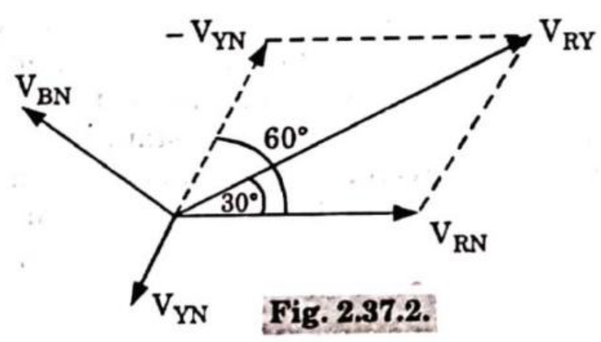

Fig. 2.37.2.

Que 2.38. Derive the relationship between line current and phase current for delta connected 3-phase load when supplied from 3-phase balanced supply. **AKTU 2017-18(Sem-2), Marks 07**

Answer

1. Consider a balanced delta connected load as shown in Fig. 2.38.1.
2. Currents I_R, I_Y and I_B are known as line currents.

   And $I_{RY} = I_{YB} = I_{BR} = I_{ph}$, *i.e.*, phase currents ...(2.38.1)

   $V_L = V_{ph}$ for delta connection. ...(2.38.2)
3. Now, applying KCL at node R

$$\vec{I}_R + \vec{I}_{BR} = \vec{I}_{RY} \quad ...(2.38.3)$$

$$\vec{I}_R = \vec{I}_{RY} - \vec{I}_{BR}$$

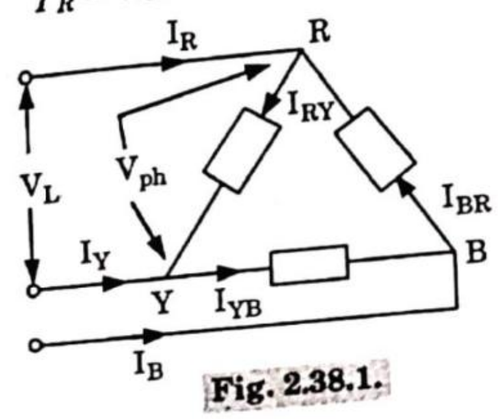

Fig. 2.38.1.

4. Magnitude of I_R can be found out as

$$I_R = \sqrt{I_{RY}^2 + I_{BR}^2 + 2I_{RY}\,I_{BR}\cos 60°}$$

$$I_R = I_L \text{ and } I_{RY} = I_{BR} = I_{ph}$$

$$I_L = \sqrt{I_{ph}^2 + I_{ph}^2 + 2I_{ph}^2 \times 0.5}$$

$$I_L = \sqrt{3}\ I_{ph}$$

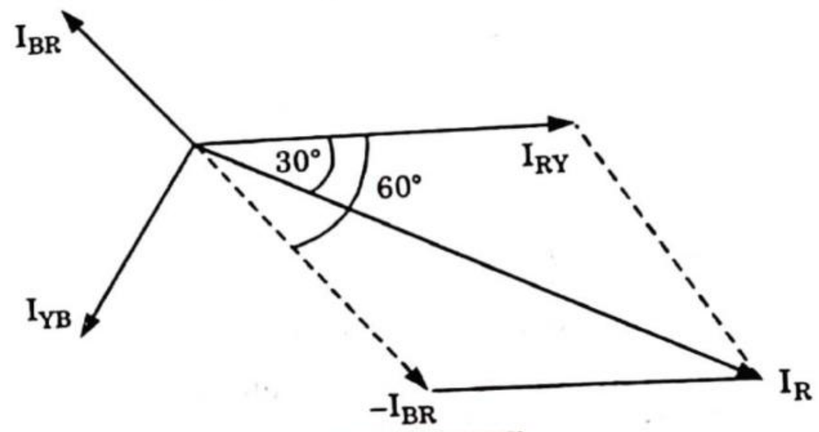

Fig. 2.38.2.

Que 2.39. Show that power in 3-phase, balanced system is constant at every instant is given by $3\,V_p I_p \cos\phi$, where V_p, I_p and ϕ have usual meanings. **AKTU 2013-14(Sem-2), Marks 10**

Answer

1. **Power for star connection :**

$$\because \quad V_L = \sqrt{3}\ V_{ph} \text{ and } I_L = I_{ph}$$

$$\therefore \quad P = 3\,V_{ph}\,I_{ph}\cos\phi = 3\left(\frac{V_L}{\sqrt{3}}\right) I_L \cos\phi$$

Scanned by TapScanner

$$P = \sqrt{3}\, V_L I_L \cos\phi$$

2. Power for delta connection :

$$V_L = V_{ph}, \quad I_L = I_{ph} \times \sqrt{3}$$

$$P = 3V_L \frac{I_L}{\sqrt{3}} \cos\phi = \sqrt{3}\, V_L\, I_L \cos\phi$$

Thus power is same in both star as well as delta connection.

3. 3-Phasor power : Phase voltages and currents in a balanced 3ϕ circuit (star or delta) may be written in the instantaneous form as,

$$V_R = \sqrt{2}\, V_{ph} \sin \omega t$$

$$V_Y = \sqrt{2}\, V_{ph} \sin(\omega t - 120°)$$

$$V_B = \sqrt{2}\, V_{ph} \sin(\omega t + 120°)$$

And

$$I_R = \sqrt{2}\, I_{ph} \sin(\omega t - \phi)$$

$$I_Y = \sqrt{2}\, I_{ph} \sin(\omega t - \phi - 120°)$$

$$I_B = \sqrt{2}\, I_{ph} \sin(\omega t - \phi + 120°)$$

where ϕ is the phase angle between phase voltage and phase current.

$$P = V_R I_R + V_B I_B + V_Y I_Y$$

$$= V_{ph} I_{ph} [2 \sin \omega t \sin(\omega t - \phi)] + V_{ph} I_{ph} [2 \sin(\omega t - 120°) \sin(\omega t - \phi - 120°)] + V_{ph} I_{ph} [2 \sin(\omega t + 120°) \sin(\omega t - \phi + 120°)]$$

$$= V_{ph} I_{ph} [\cos\phi - \cos(2\omega t - \phi) + \cos\phi - \cos(2\omega t - \phi - 240°) + \cos\phi - \cos(2\omega t - \phi + 240°)]$$

Average power, $P = 3\, V_{ph} I_{ph} \cos\phi$

Que 2.40. **A 3-phase load consisting of resistance 25 Ω, inductance of 0.15 H and capacitor of 100 μF is connected to 400 V, 50 Hz. Calculate line current, power factor, total power**

i. When connected in star

ii. When connected in delta. **AKTU 2013-14(Sem-1), Marks 05**

Answer

1. Inductive reactance, $X_L = 2\pi f L = 2\pi \times 50 \times 0.15 = 47.12\ \Omega$
2. Capacitive reactance, $X_C = \dfrac{1}{2\pi f C} = 1(2\pi \times 50 \times 100 \times 10^{-6}) = 31.83\ \Omega$
3. Net reactance, $X = X_L - X_C = 15.29\ \Omega$
4. Impedance, $Z = \sqrt{R^2 + X^2} = \sqrt{(25)^2 + (15.29)^2} = 29.305\ \Omega$
5. Phase angle $\phi = \tan^{-1} \dfrac{X}{R} = \tan^{-1} \dfrac{15.29}{25} = 31.440$

A. When connected in star :

1. Line current = Phase current = $I_P = \dfrac{V_L/\sqrt{3}}{Z} = \dfrac{V_P}{Z}$

$$= \frac{400/\sqrt{3}}{29.305} = 7.88\ \text{A} \qquad [\because \ (V_P = V_L/\sqrt{3})]$$

2. Power factor, $\cos\phi = \dfrac{R}{Z} = \dfrac{25}{29.305} = 0.853$ (lagging)
3. Total power = $\sqrt{3}\, V_L I_L$

$$= \sqrt{3} \times 400 \times 7.88 = 5459.42\ \text{W}$$

B. When connected in delta :

1. Phase current, $I_P = \dfrac{V_p}{Z} = \dfrac{400}{29.305} = 13.65$ A
2. Line current, $I_L = \sqrt{3}\, I_p = \sqrt{3} \times 13.65 = 23.64$ A
3. Total power = $\sqrt{3}\, V_L I_L = \sqrt{3} \times 400 \times 23.64 \times = 16378.27$ W

Que 2.41. **A balanced delta connected load impedance 16 + j12 Ω/phase is connected to a three-phase 400 V supply. Find the phase current, line power factor, active power, reactive power and total power. Also draw the phasor diagram.**

AKTU 2014-15(Sem-1), Marks 10

Answer

1. $V_p = V_L = 400$ V
2. Phase current, $I_p = \dfrac{400\angle 0°}{16 + j12} = 20\angle -36.9°\ \text{A} \simeq 20\angle -37°$
3. Power factor, $\cos\phi = \cos 36.9° = 0.8$ (lagging)
4. $I_L = \sqrt{3} \times 20 = 34.64$ A
5. Active power, $P = \sqrt{3} \times 400 \times 34.64 \times 0.8 = 19.2$ kW
6. Reactive power, $Q = \sqrt{3} \times 400 \times 36.64 \times \sin 36.9° = 14.4$ kVAR
7. Total power, $S = [P^2 + Q^2]^{1/2} = 24$ kVA
8. Phasor diagram is shown in Fig. 2.41.1.

Scanned by TapScanner

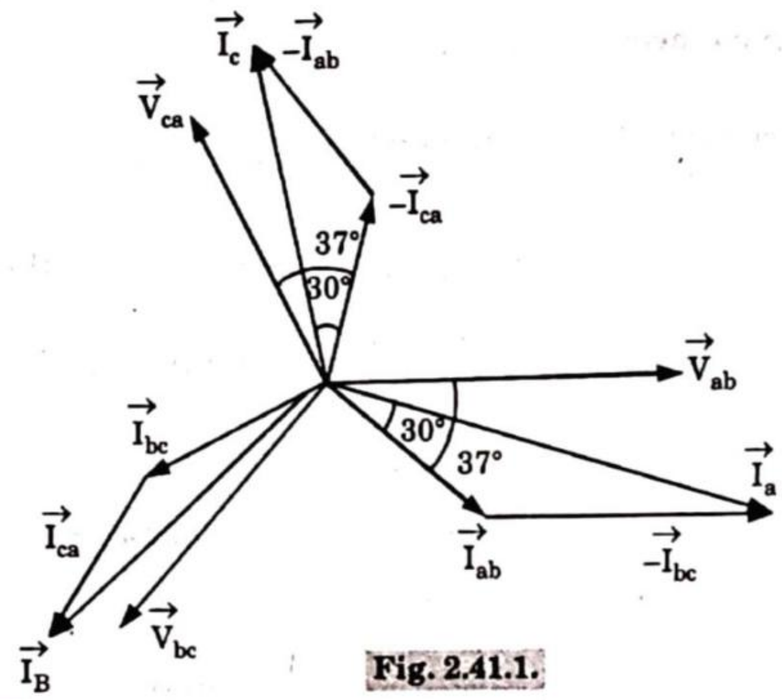

Fig. 2.41.1.

Que 2.42. **Derive the relation between line and phase voltage and current for a delta connected 3-phase balanced system. A balanced delta-connected load of impedance, $Z = 30 \angle 60°\ \Omega$ is connected to line voltage of 440 V. Obtain the current and power supplied to load.**

AKTU 2014-15(Sem-2), Marks 10

Answer

A. **Relation between line and phase voltage and current in delta connection :** Refer Q. 2.38, Page 2–41D, Unit-2.

B. **Numerical :**

The procedure is same as Q. 2.41, Page 2–44D, Unit-2.

(**Ans.** Line current = 25.46 A ; Power = 3241.35 W)

Que 2.43. **Obtain the relation between line and phase voltages in balanced star connected load system. Also draw its phasor diagram. A 3-phase, star connected balanced load is supplied by 400 V, 50 Hz. The load takes a leading current of $100\sqrt{3}$ A and power 20 kW. Calculate power factor of load and resistance and inductance per phase.**

AKTU 2015-16(Sem-1), Marks 15

Answer

A. **Relation between line and phase voltage in balanced star connected system :** Refer Q. 2.37, Page 2–40D, Unit-2.

B. **Numerical :**

1. Power, $P = \sqrt{3}\ V_L I_L \cos\phi$

2. Power factor, $\cos\phi = \dfrac{P}{\sqrt{3}\,V_L\,I_L} = \dfrac{20 \times 10^3}{\sqrt{3} \times 400 \times 100\sqrt{3}} = 0.167$ (lead)

3. Phase voltage, $V_{ph} = V_L / \sqrt{3} = 400 / \sqrt{3} = 230.94$ V

4. Phase current, $I_{ph} = I_L = 100\sqrt{3}$ A

5. Phase impedance, $Z_{ph} = \dfrac{V_{ph}}{I_{ph}} = \dfrac{230.94}{100\sqrt{3}} = 1.33\ \Omega$

6. Phase resistance, $R_{ph} = Z_{ph} \cos\phi = 1.33 \times 0.167 = 0.22\ \Omega$

7. Phase reactance, $X_{ph} = \sqrt{Z_{ph}^2 - R_{ph}^2} = \sqrt{(1.33)^2 - (0.22)^2} = 1.31\ \Omega$

8. Phase inductance, $L_{ph} = \dfrac{X_{ph}}{2\pi f} = \dfrac{1.31}{2 \times 3.14 \times 50} = 4.17 \times 10^{-3}$ H

Que 2.44. **Derive relation between line and phase values in delta connected 3-phase balance system. A 3-phase voltage source has a phase voltage of 120 V and supplies star connected load having impedance of $(24 + j36)\ \Omega$ per phase. Calculate**

i. Line voltage
ii. Line current
iii. Total 3-phase power supplied to the load.

AKTU 2016-17(Sem-1), Marks 07

Answer

A. **Relation between line and phase values in delta connection :** Refer Q. 2.38, Page 2–41D, Unit-2.

B. **Numerical :**

1. **Line voltage :** $V_L = \sqrt{3}\ V_p$

$$V_L = \sqrt{3} \times 120 = 207.84 \text{ V}$$

Line current : $Z_p = \sqrt{(24)^2 + (36)^2} = 43.269\ \Omega$

$$I_L = I_p = \frac{V_p}{Z_p} = \frac{120}{43.269}$$

$$I_L = 2.77 \text{ A}$$

Scanned by TapScanner

3. Total 3-phase supplied to the load :

$$S = \sqrt{3}\ V_L I_L$$

$$S = \sqrt{3} \times 207.84 \times 2.77$$

$$S = 997.17 \text{ VA}$$

Que 2.45. **A balanced star connected load of (8 + j6) Ω per phase is connected to a 3-phase 400 V supply. Find the line current, power factor and total volt-amperes.** **AKTU 2017-18(Sem-2), Marks 07**

Answer

The procedure is same as Q. 2.40, Page 2–43D, Unit-2.

(**Ans.** Line current = 23.1 A; Power factor = 0.8; Total volt-amperes = 16004 VA)

Que 2.46. **A balanced star connected load of (8 + j6) Ω per phase is connected to a 3-phase 400 V supply. Find the line current, power factor, 3-phase power and 3-phase volt-amperes. Also draw the phasor diagram.** **AKTU 2016-17(Sem-2), Marks 07**

Answer

The procedure is same as Q. 2.40, Page 2–43D, Unit-2.

(**Ans.** Line current = 23.09 A, cos ϕ = 0.8 (lagging), P = 12797.7 W, S = 15997.22 VA)

Phasor diagram :

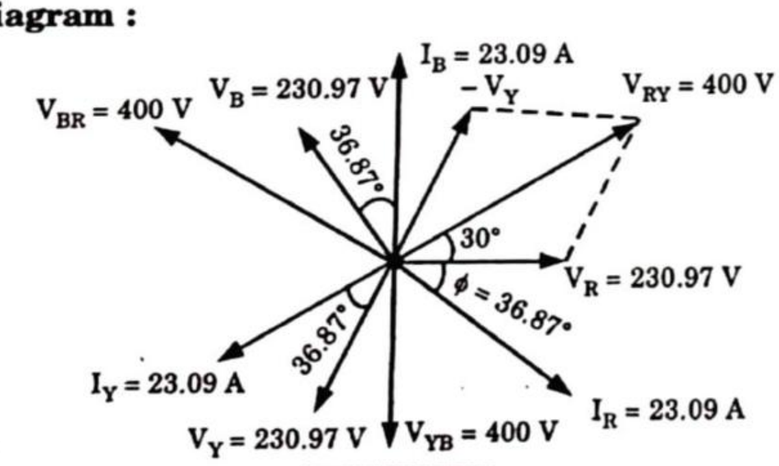

Fig. 2.46.1.

Que 2.47. **Three similar coils each having a resistance of 10 ohm and an inductance of 0.0318 H in series are connected in delta. The line voltage is 400 V, 50 Hz. Calculate :**

i. Phase current

ii. Line current

iii. Power factor

iv. Total power in the circuit **AKTU 2015-16(Sem-2), Marks 10**

Answer

The procedure is same as Q. 2.40, Page 2–43D, Unit-2.

(**Ans.** Phase current = 28.28 A; Line current = 49.98 A; Power factor = 0.707; Total power = 33.93 kVA)

Que 2.48. **Three similar coils of impedance Z = (8 + j6) Ω are connected in delta and supplies from 3ϕ, 400 V, 50 Hz supply. Find line current, power factor, total active power, total reactive power, total volt-amperes.** **AKTU 2017-18(Sem-1), Marks 3.5**

Answer

The procedure is same as Q. 2.41, Page 2–44D, Unit-2.

(**Ans.** I_L = 69.28 A; cos ϕ = 0.2; Total active power = 38.4 kW; Reactive power = 28.8 kVAR; S = 48 kVA)

☺☺☺

Scanned by TapScanner

3 UNIT

Transformers

Part-1 ..... **(3–2D to 3–6D)**

- *Magnetic Materials*
- *B-H Characteristics*
- *Ideal and Practical Transformer*

A. Concept Outline : Part-1 ..... 3–2D
B. Long and Medium Answer Type Questions 3–2D

Part-2 ..... **(3–6D to 3–20D)**

- *Equivalent Circuit*
- *Losses in Transformers*
- *Regulation and Efficiency*

A. Concept Outline : Part-2 ..... 3–6D
B. Long and Medium Answer Type Questions 3–6D

Part-3 ..... **(3–20D to 3–24D)**

- *Auto-Transformer and Three Phase Transformer Connections*

A. Concept Outline : Part-3 ..... 3–20D
B. Long and Medium Answer Type Questions 3–20D

PART-1

Magnetic Materials, B-H Characteristics, Ideal and Practical Transformer.

CONCEPT OUTLINE : PART-1

- Transformer is an AC machine that :

1. It transfers electrical energy from one electric circuit to another.
2. It does so without a change of frequency.
3. It does so by the principle of electromagnetic induction.
4. It has electric circuits that are linked by a common magnetic circuit.

Questions-Answers

Long Answer Type and Medium Answer Type Questions

Que 3.1. **Write short notes on the following :**

A. Diamagnetic
B. Paramagnetic
C. Ferromagnetic
D. Antiferromagnetic
E. Ferrimagnetic.

Answer

A. **Diamagnetic :** When a diamagnetic material is placed in a magnetic field, it becomes weakly magnetized in a direction opposite to the direction of external magnetic field. This property of material is known as diamagnetism.

Fig. 3.1.1. Diamagnetic.

Examples : Bismuth, silver, copper and hydrogen.

B. **Paramagnetic :**

1. In paramagnetic materials the magnetic dipoles are already present. These materials are permanently magnetized but dipoles are randomly oriented and have a low net magnetism.

Scanned by TapScanner

2. When these materials are placed in external magnetic field, the dipoles orient themselves in the direction of external magnetic field. This property is known as paramagnetism.

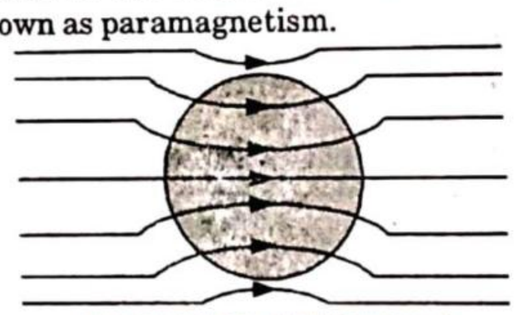

Fig. 3.1.2. Paramagnetic.

Examples : Aluminium, platinum and oxygen.

C. **Ferromagnetic :** When a ferromagnetic material is placed in external magnetic field, it strongly attracts the magnetic lines of force and the domains orient themselves in the direction of the field to increase the flux produced by the external field. This property is known as ferromagnetism.

Examples : Iron, cobalt, nickel.

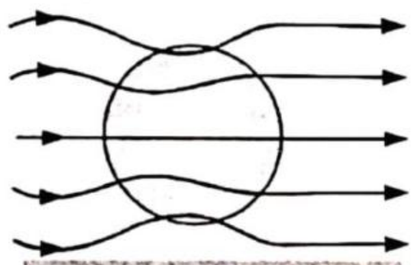

Fig. 3.1.3. Ferromagnetic.

D. **Antiferromagnetic :**

1. In antiferromagnetic material the atomic magnetic dipoles line up antiparallel to each other and cancel out exactly.
2. Therefore, these have no external magnetic field effects. This property is called antiferromagnetism.

Examples : Chromium, manganese, MnO, MnS and FeO.

E. **Ferrimagnetic :** In ferrimagnetic materials the atomic magnetic dipoles line up antiparallel to each other, but do not cancel out, because they have different magnetic dipole moments. The resultant magnetic moment may be quite large. This property is called ferrimagnetism.

Examples : MeO, Fe_2O_3.

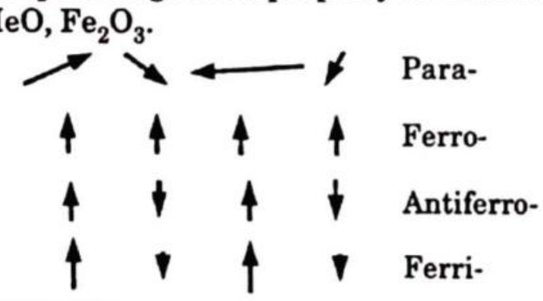

Fig. 3.1.4. Schematic illustration of a paramgnetic, ferromagnetic, antiferromagnetic and ferrimagnetic arrangement of spins.

Que 3.2. **Discuss the *B-H* curve for a magnetic material and identify the retentivity and the coercive field on the curve.**

Answer

1. The graph between flux density B and magnetizing force H, drawn for increasing and decreasing values of magnetizing force H is known as B-H curve.
2. When a ferromagnetic material is placed in a magnetization field, magnetic induction lags behind the magnetization field. This phenomenon is known as hysteresis.
3. The B-H curve drawn for one complete cycle of magnetization and demagnetization is known as hysteresis loop.
4. **Hysteresis curve :**

i. Plotting a graph between B and H for a ferromagnetic material is known as hysteresis curve or B–H curve as shown in Fig. 3.2.1.

ii. **Retentivity :** According to curve at point c, $H = 0$ but B is not zero and $B \rightarrow B_r$ is known as remanence or residual magnetism.

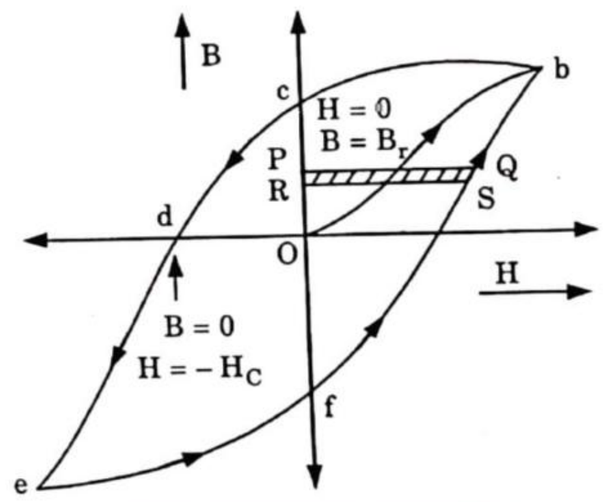

Fig. 3.2.1. Hysteresis loop.

iii. **Coercivity :** According to graph at the point d, $B = 0$ and $H \rightarrow H_C$ is known as coercivity.

iv. **Residual magnetism :** It is defined as the magnetic flux density which still persists in magnetic material even when the magnetising force is completely removed. In Fig. 3.2.1 on reducing the value of H from the saturation region to zero there remains a flux density B_r which is residual magnetism.

v. **Coercive force (field) :** It is defined as demagnetizing force which is necessary to neutralize completely the magnetism in an electromagnet when the value of magnetizing force becomes zero. In Fig. 3.2.1, H_C is required to reduce flux density to zero and is called coercive force.

Scanned by TapScanner

Que 3.3. **What are soft magnetic materials ? Also, give its characteristics.**

Answer

A. Soft magnetic materials :

1. Soft magnetic materials are those which have thin and narrow *B-H* curves, *i.e.*, the area within the hysteresis loop is small.
2. Hence, soft magnetic materials are used in devices that are subjected to alternating magnetic fields and in which energy losses must be low.
3. A material possessing these properties may reach its saturation magnetization with a relatively low applied field and still has low hysteresis energy losses.

The *B-H* curve for soft magnetic materials is shown in Fig. 3.3.1.

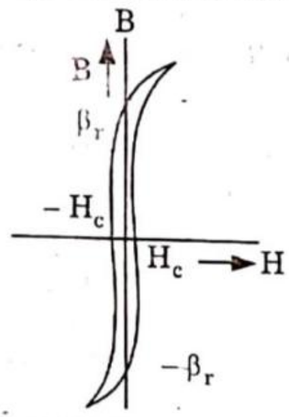

Fig. 3.3.1. Hysteresis curve for soft magnetic materials.

B. Soft magnetic materials have following characteristics :

1. Magnetically soft materials have high permeability, negligible coercive force and have low remanence.
2. Their *B-H* curve is steep and area under *B-H* curve is small.
3. They have high permeability.
4. They have low remanence.

C. Examples : Pure iron, cast iron, carbon steels, silicon steels, manganese and nickel steels, and ferrites.

Que 3.4. **Discuss about magnetically hard materials. Also, enumerate characteristics of hard materials.**

Answer

A. Hard magnetic materials :

1. Hard magnetic materials are those which retain a considerable amount of their magnetic energy after the magnetizing force has been removed *i.e.*, the materials, which are difficult to demagnetize.
2. These materials are also called permanent magnetic materials.

3. Magnetically hard materials are used for making permanent magnets.

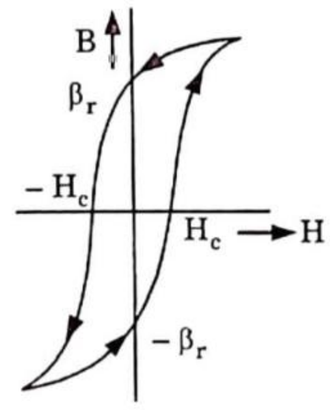

Fig. 3.4.1. Hysteresis curve for hard magnetic materials.

4. Steel containing carbon, tungsten, chromium or cobalt is used for making permanent magnets.

B. Magnetically hard materials have following characteristics :

1. They have large area under hysteresis loop.
2. High retentivity.
3. High coercivity.

C. Examples : Alnico, tungsten steel, cobalt steel and chromium steel.

PART 2

Equivalent Circuit, Lossess in Transformer, Regulation and Efficiency.

CONCEPT OUTLINE : PART-2

- **Step-up transformer :** A transformer in which output (secondary) voltage is greater than its input (primary) voltage.
- **Step-down transformer :** A transformer in which output (secondary) voltage is less than its input (primary) voltage.

Questions-Answers

Long Answer Type and Medium Answer Type Questions

Que 3.5. **What is transformer ? Explain the constructional features of different types of transformer.**

AKTU 2014-15(Sem-1), Marks 05

Scanned by TapScanner

Answer

A. **Transformer :** A transformer is a static electrical device transfer electrical energy between two or more circuits through electromagnetic induction.

B. **Types :**

a. **Core-type transformer :**

1. In the core-type transformer, the magnetic circuit consists of two vertical legs or limbs with two horizontal sections, called yokes.
2. To keep the leakage flux to a minimum, half of each winding is placed on each leg of the core as shown in Fig. 3.5.1.
3. The low-voltage winding is placed next to the core and the high-voltage winding is placed around the low-voltage winding to reduce the insulating material required.
4. Thus, the two windings are arranged as concentric coils. Such a winding is, therefore, called concentric winding or cylindrical winding.

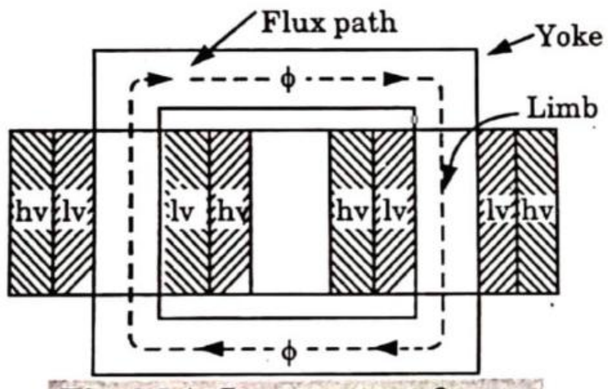

Fig. 3.5.1. Core-type transformer.

b. **Shell-type transformer :**

1. In the shell-type transformer (Fig. 3.5.2), both primary and secondary windings are wound on the central limb, and the two outer limbs complete the low-reluctance flux paths.

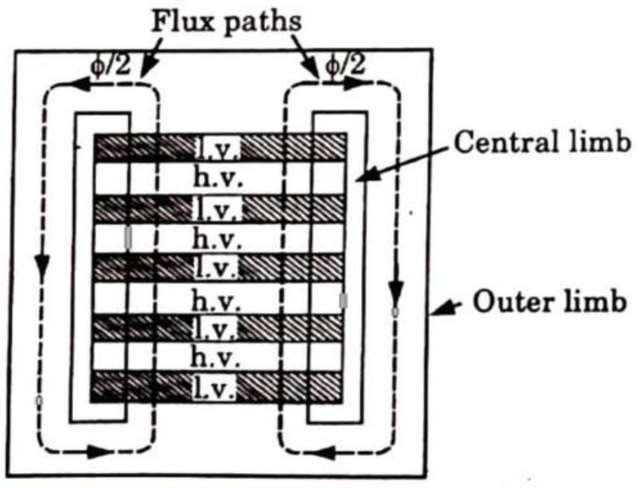

Fig. 3.5.2. Shell-type transformer.

2. Each winding is subdivided into sections. Low-voltage (*lv*) and high-voltage (*hv*) subsections are alternately put in the form of a sandwich. Such a winding is, therefore, called sandwich or disc winding.

Que 3.6. **Define ideal transformer and practical transformer. Compare ideal transformer and practical transformer.**

Answer

1. **Transformer :** A transformer is a static electrical device that transfers electrical energy between two or more circuits through electromagnetic induction.
2. **Ideal transformer :** The transformer which is free from all types of losses is known as ideal transformer. It has no core loss, no ohmic resistance, no leakage flux etc.
3. **Practical transformer :** In this types of transformer all types of losses are present.

S. No.	Ideal transformer	Practical transformer
1.	It has 100 % efficiency.	It has below 100 % efficiency.
2.	It has no losses.	It has losses.
3.	There is no ohmic resistance drop.	There is ohmic resistance drop.
4.	It has no leakage drop.	It has leakage drop.

Que 3.7. **Explain working of single phase transformer.**

Answer

1. Consider two coils 1 and 2 wound on a simple magnetic circuit as shown in Fig. 3.7.1. These two coils are insulated from each other and there is no electrical connection between them.

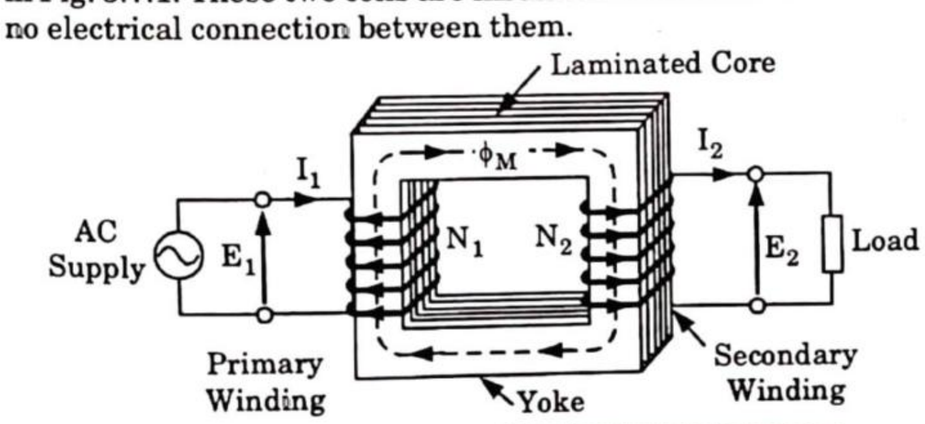

Fig. 3.7.1. Arrangements of a transformer.

2. Let N_1 and N_2 be the number of turns in coils 1 and 2 respectively.

Scanned by TapScanner

3. When a source of alternating voltage V_1 is applied to coil 1, an alternating current I_0 flows in it. This alternating current produces an alternating flux ϕ_M in the magnetic circuit.
4. The mean path of this flux is shown in Fig. 3.7.1 by the dotted line.
5. This alternating flux links the turns N_1 of coil 1 and induces in them an alternating voltage E_1 by self-induction.
6. Thus, all the flux produced by coil 1 also links N_2 turns of coil 2 and induces in them a voltage E_2 by mutual induction.
7. If coil 2 is connected to a load then an alternating current will flow through it and energy will be delivered to the load.
8. Thus, electrical energy is transferred from coil 1 to coil 2 by a common magnetic circuit.
9. Coil 1, which receives energy from the source of AC supply, is called the primary coil or primary winding or simply the primary.
10. Coil 2, which is connected to load and delivers energy to the load, is called the secondary coil or secondary winding or simply the secondary.

Que 3.8. **Explain the principle of operation of transformer. Derive emf equation of single-phase transformer.**

AKTU 2015-16(Sem-1), Marks 10

OR

Derive the induced emf-flux relationship of the transformer.

AKTU 2014-15(Sem-1), Marks 05

OR

Discuss the principle of operation of a single phase transformer. Derive emf-equation for a single phase transformer.

AKTU 2017-18(Sem-2), Marks 07

Answer

A. Principle of operation of 1-ϕ transformer : Refer Q. 3.7, Page 3–SD, Unit-2.

B. Derivation :

1. Let the flux at any instant be given by

$$\phi = \phi_m \sin \omega t \quad ...(3.8.1)$$

2. The instantaneous emf induced in a coil of N turns linked by this flux is given by Faraday's law as

$$e = -\frac{d}{dt}(\phi N) = -N\frac{d\phi}{dt} = -N\frac{d}{dt}(\phi_m \sin \omega t)$$
$$= -N\omega\phi_m \cos \omega t$$
$$= N\omega\phi_m \sin(\omega t - \pi/2)$$

$$e = E_m \sin(\omega t - \pi/2) \quad ...(3.8.2)$$

where $E_m = N\omega\phi_m$ = Maximum value of e.

3. For a sine wave, the rms value of emf is given by

$$E_{rms} = E = E_m / \sqrt{2}$$
$$\therefore \quad E = \frac{N\omega\phi_m}{\sqrt{2}} = \frac{N(2\pi f)\phi_m}{\sqrt{2}}$$
$$E = 4.44\, \phi_m f N \quad ...(3.8.3)$$

eq. (3.8.3) is called the emf equation of a transformer.

4. The emf induced in each winding of the transformer can be calculated from its emf equation. Let subscripts 1 and 2 be used for primary and secondary quantities. The primary rms voltage is

$$E_1 = 4.44\, \phi_m f N_1 \quad ...(3.8.4)$$

5. The secondary rms voltage is

$$E_2 = 4.44\, \phi_m f N_2 \quad ...(3.8.5)$$

where ϕ_m is the maximum of flux in webers (Wb), f is the frequency in hertz (Hz) and E_1 and E_2 are in volts.

Que 3.9. **A single phase, 50 Hz core type transformer has square cores of 20 cm side, permissible maximum flux density is 1 Wb/m². Calculate the number of turns per limb on high and low voltage sides for a 300/220 V ratio.**

AKTU 2017-18(Sem-2), Marks 07

Answer

Given : Core length = 20 cm, f = 50 Hz, B_{max} = 1 Wb/m² per limb, N = 300/220

To Find : Number of turns per limb.

1. Core area = 20 × 20 = 400 cm² = 0.04 m²

Maximum value of permissible flux

$$\phi_{max} = B_{max} \times a = 1 \times 0.04 = 0.04 \text{ Wb}$$

2. Number of turns of low voltage winding

$$N_2 = \frac{E_2}{4.44 f \phi_{max}} = \frac{220}{4.44 \times 50 \times 0.04} = 24.77 \approx 26$$

(Number of turns is rounded off to the next higher even number in order that maximum flux density does not exceed the permissible maximum flux density).

3. Number of turns of high voltage winding,

$$N_1 = \frac{E_1}{E_2} \times N_2 = \frac{300}{220} \times 26 = 36$$

Scanned by TapScanner

4. Number of *HV* turns on each limb = $\frac{36}{2} = 18$

5. Number of *LV* turns on each limb = $\frac{26}{2} = 13$

Que 3.10. Explain why the hysteresis loss and eddy current loss occur in a transformer ? Explain how these losses can be reduced in a transformer ? **AKTU 2016-17(Sem-1), Marks 3.5**

OR

Explain various types of losses occur in transformers.

Answer

A. Iron or core losses : Iron loss is caused by the alternating flux in the core and consists of hysteresis and eddy current losses :

a. Hysteresis loss :

1. The core of a transformer is subjected to an alternating magnetizing force and for each cycle of emf a hysteresis loop is traced out.
2. The hysteresis loss per second,

$$P_h = \eta'(B_{max})^x f v \text{ joules per second or watts} \quad ...(3.10.1)$$

where, f = Supply frequency in Hz

v = Volume of core in cubic metres

η' = Hysteresis coefficient

B_{max} = Peak value of flux density in the core

x = Between 1.5 and 2.5 depending upon the material and is often taken as 1.6.

b. Eddy current loss :

1. If the magnetic circuit is made up of iron and if the flux in the circuit is variable, currents will be induced by induction in the iron circuit itself. All such currents are known as eddy currents.
2. Eddy currents result in a loss of power, with consequent heating of the material.
3. The eddy current loss,

$$P_e = K_e(B_{max})^2 f^2 t^2 v \text{ watts or joules per second} \quad ...(3.10.2)$$

4. The hysteresis and eddy current losses depend upon the maximum flux density in the core and supply frequency.
5. These losses are determined from the open-circuit test.

Minimization : These losses are minimized by using steel of high silicon content for the core and by using very thin laminations (0.3 mm to 0.5 mm) insulated from each other either by insulating varnish or by layer of papers.

B. Copper or Ohmic losses :

1. These losses occur due to ohmic resistance of the transformer windings.
2. If I_1 and I_2 are the primary and secondary currents respectively and R_1 and R_2 are the respective resistances of primary and secondary windings then copper losses occurring in primary and secondary windings will be $I_1^2R_1$ and $I_2^2R_2$ respectively.
3. So total copper losses will be $(I_1^2R_1 + I_2^2R_2)$.
4. These losses vary as the square of the load current or kVA.
5. Copper losses are determined on the basis of constant equivalent resistance R_{eq} determined from the short-circuit test.

Minimization :

1. The windings of the transformer are made thick so that the resistances are minimized.
2. **Vacuum Pressure Impregnation (VPI) :** In this technique the transformer is kept in vacuum then high pressure varnish is passed so that the smallest of the air gaps are also filled, hence reducing the copper losses.

Que 3.11. Derive and explain the equivalent circuit of a transformer. **AKTU 2014-15(Sem-2), Marks 05**

Answer

1. Transformer has 3 main parts :

i. Primary winding

ii. Core

iii. Secondary winding.

2. Primary winding is shown by series combination of resistance R_1 and reactance X_{L1}, whereas secondary winding is shown by series combination of resistance R_2 and reactance X_{L2}.
3. The core of transformer is assumed to be parallel combination of resistance R_0 and reactance X_0. R_0 represents the core loss and hence known as core loss resistance, whereas X_0 represents magnetising reactance of the core.

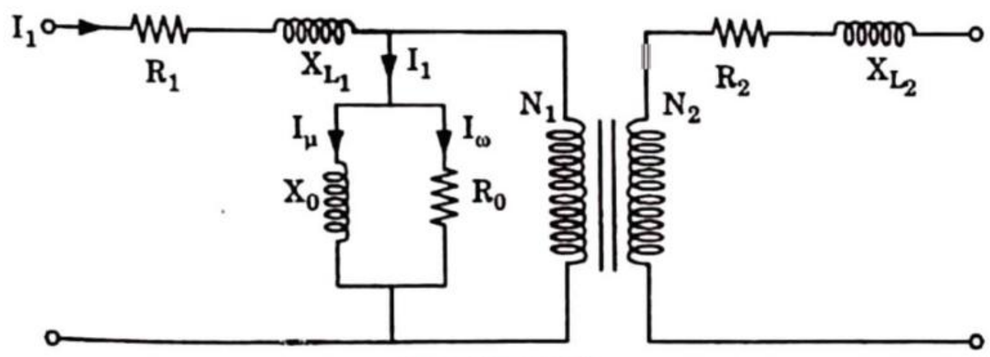

Fig. 3.11.1.

Scanned by TapScanner

4. N_1 and N_2 show number of turns. The voltage levels of primary and secondary are different.
5. To bring all the components of equivalent circuit to one voltage level, either primary side components are to be shifted on secondary or secondary side components to be shifted on primary.

i. Equivalent circuit as referred to primary or secondary components shifted to primary :

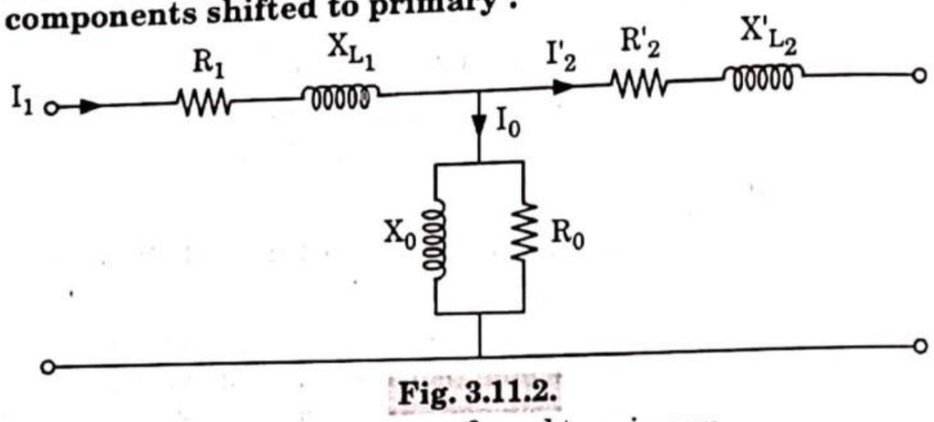

Fig. 3.11.2.

1. R_2' = Secondary resistance transferred to primary.

$$R_2' = \frac{R_2}{K^2}$$

X'_{L_2} = Secondary leakage reactance as transferred to primary.

$$X'_{L_2} = \frac{X_{L_2}}{K^2}$$

where $$K = \frac{N_2}{N_1} = \frac{V_2}{V_1}$$

2. As compared to primary component of secondary current I_2', I_0 is much less, $I_0 << I_2'$.
3. So, Neglecting I_0, approximate equivalent circuit as referred to primary is given by

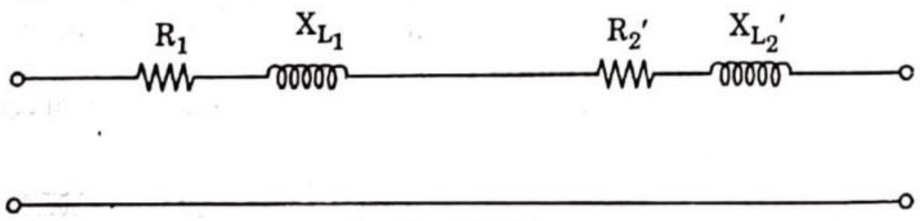

Fig. 3.11.3.

4. It can be simplified further as,

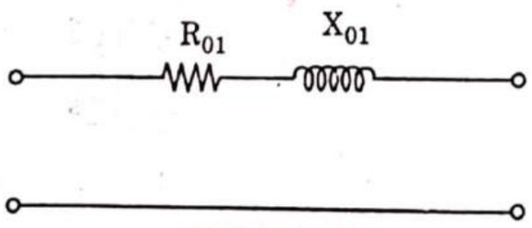

Fig. 3.11.4.

$\therefore$ where $R_{01} = R_1 + R_2'$

i.e., $R_{01} = R_1 + \frac{R_2}{K^2}$ known as equivalent resistance of transformer as referred to primary.

and $X_{01} = X_{L1} + X_{L2}' = X_{L1} + \frac{X_{L_2}}{K^2}$, known as equivalent reactance as referred to primary.

ii. Equivalent circuit as referred to secondary :

1. It can be obtained by transferring R_1, X_1, R_0 and X_0 to secondary side.

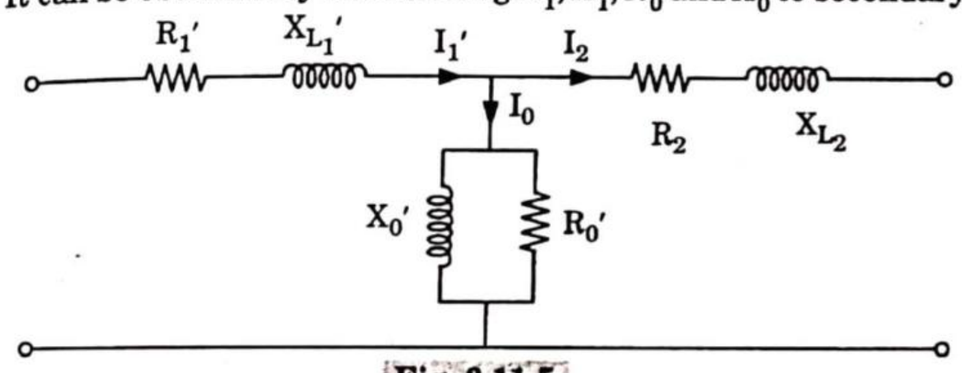

Fig. 3.11.5.

2. Since $I_0' << I_2$, I_0' *i.e.* shunt branch parameters R_0 and X_0 can be skipped.
   $\therefore$ Approximate equivalent circuit as referred to secondary is

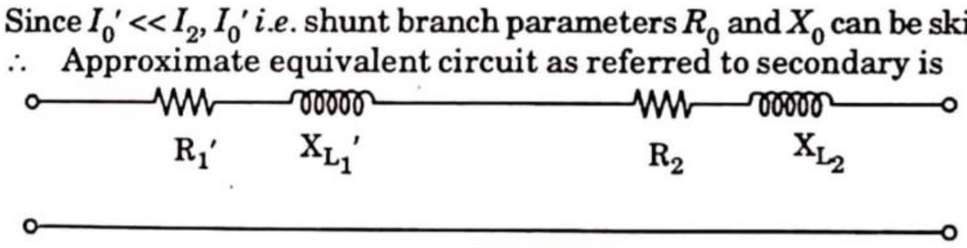

Fig. 3.11.6.

where R_1' = K^2R_1 – Primary resistance as referred to secondary.
and $X'_{L1} = K^2X_{L1}$ – Primary reactance as referred to secondary.

3. It can be further simplified as,

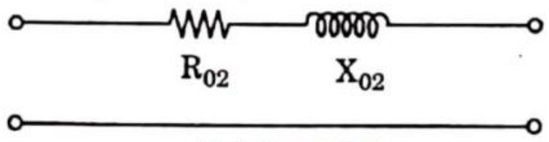

Fig. 3.11.7.

$$R_{02} = R_1' + R_2 = R_2 + K^2R_1$$
$$X_{02} = X_{L1}' + X_{L2} = X_{L2} + K^2X_{L1}$$

where R_{02} = Equivalent resistance of transformer as referred to secondary.

and X_{02} = Equivalent reactance of transformer as referred to secondary.

Que 3.12. Define efficiency of transformer. Find condition for maximum efficiency of transformer.

AKTU 2014-15(Sem-2), Marks 05

Scanned by TapScanner

OR

What do you understand by the efficiency of a transformer ? Deduce the condition for maximum efficiency.

AKTU 2016-17(Sem-1), Marks 3.5

OR

Explain working of a single phase transformer and also derive the condition for maximum efficiency in the transformer.

AKTU 2017-18(Sem-1), Marks 3.5

Answer

A. **Working of transformer :** Refer Q. 3.7, Page 3–8D, Unit-3.

B. **Transformer efficiency :**

1. The ratio of the output power to input power in a transformer is known as transformer efficiency (η).

$$\eta = \frac{\text{Output power}}{\text{Input power}}$$

$$= \frac{\text{Output power}}{\text{Output power + Copper loss + Iron loss}} \text{ pu}$$

2. Thus, the per unit efficiency at load current I_2 and power factor $\cos\phi_2$ is

$$\eta = \frac{V_2 I_2 \cos\phi_2}{V_2 I_2 \cos\phi_2 + I_2^2 R_{e_2} + P_i} \text{ pu}$$

where,
η = Efficiency
V_2 = Load voltage
I_2 = Load current
R_{e_2} = Equivalent resistance
$\cos\phi_2$ = Power factor
P_i = Iron loss.

C. **Condition for maximum efficiency :**

1. $$\eta = \frac{V_2 I_2 \cos\phi_2}{V_2 I_2 \cos\phi_2 + I_2^2 R_{e_2} + P_i}$$

$$= \frac{V_2 \cos\phi_2}{V_2 \cos\phi_2 + I_2 R_{e_2} + (P_i / I_2)}$$

2. At maximum efficiency

$$\frac{d\eta}{dI_2} = 0 \text{ and } \frac{d^2\eta}{dI_2^2} < 0$$

3. Since V_2 and $\cos\phi_2$ are constants for a given load, the efficiency will be maximum when the denominator $D_r \left(= V_2 \cos\phi_2 + I_2 R_{e_2} + \frac{P_i}{I_2}\right)$ is minimum.

4. For a minimum value of the denominator D_r

$$\frac{dD_r}{dI_2} = 0 \text{ and } \frac{d^2 D_r}{dI_2^2} > 0$$

$$\frac{dD_r}{dI_2} = \frac{d}{dI_2}\left(V_2 \cos\phi_2 + I_2 R_{e_2} + \frac{P_i}{I_2}\right) = 0 + R_{e_2} - \frac{P_i}{I_2^2}$$

5. For a minimum D_r,

$$R_{e_2} - \frac{P_i}{I_2^2} = 0$$

$$I_2^2 R_{e_2} = P_i \quad \text{...(4.12.1)}$$

6. Also, $$\frac{d^2 D_r}{dI_2^2} = \frac{d}{dI_2}\left(R_{e_2} - \frac{P_i}{I_2^2}\right) = 0 + \frac{2P_i}{I_2^3} > 0$$

7. Since $\frac{d^2 D_r}{dI_2^2}$ is positive, the expression given by eq. (4.12.1) is a condition for the minimum value of D_r, and therefore the condition for maximum value of efficiency.

8. The efficiency of a transformer for a given power factor is a maximum when the variable copper loss is equal to the constant iron (core) loss.

Que 3.13. **List the various losses occurring in transformer and the condition for maximum efficiency. In a 25 kVA, 2000/200 V transformer the iron and copper losses are 200 W and 400 W respectively. Calculate the efficiency at half load and 0.8 power factor lagging. Determine also the maximum efficiency and the corresponding load.**

AKTU 2015-16(Sem-1), Marks 10

OR

In a 25 kVA, 2000 V/200 V transformer the iron and copper losses are 200 W and 400 W respectively. Calculate the efficiency of half load and 0.8 pf lagging. Also determine the maximum efficiency and corresponding load.

AKTU 2016-17(Sem-2), Marks 07

Answer

A. **Losses in transformer :** Refer Q. 3.10, Page 3–11D, Unit-3.

B. **Condition for maximum efficiency :** Refer Q. 3.12, Page 3–14D, Unit-3.

C. **Numerical :**

Given : Volt-ampere rating = 25 kVA, P_i = 200 W, P_{Cu} = 400 W, pf = $\cos\phi$ = 0.8

To Find : η_{max}, Load for maximum efficiency and Efficiency at half load.

1. **Efficiency at half load :**

$x = 0.5$

Scanned by TapScanner

$$\eta_{hl} = \frac{x \times \text{kVA} \times 10^3 \times \cos\phi}{x \times \text{kVA} \times 10^3 \times \cos\phi + P_i + x^2 P_{Cu}}$$

$$= \frac{0.5 \times 25 \times 10^3 \times 0.8}{0.5 \times 25 \times 10^3 \times 0.8 + 200 + 0.5^2 \times 400}$$

$$= 0.9708 \text{ or } 97.08\ \%$$

2. Load for maximum efficiency :

Let x = Percentage of load at which maximum efficiency occurs

$$x = \sqrt{\frac{P_i}{P_{Cu}}} = \sqrt{\frac{200}{400}} = 0.707$$

$\therefore$ Load for maximum η = Full load $\times$ $x = 25 \times 0.707 = 17.68$ kVA

3. Maximum efficiency

$$\eta_{max} = \frac{x \times \text{kVA} \times 10^3 \times \cos\phi}{x \times \text{kVA} \times 10^3 \times \cos\phi + P_i + x^2 P_{Cu}}$$

$$= \frac{0.707 \times 25 \times 10^3 \times 0.8}{0.707 \times 25 \times 10^3 \times 0.8 + 200 + 0.707^2 \times 400}$$

$$= 0.9725$$

$$\%\ \eta_{max} = 97.25\ \%$$

Que 3.14. **The efficiency of a 400 kVA, single-phase transformer is 98.77 % at full load 0.8 pf and 99.13 % at half load unity pf. Find Iron and Cu losses at half load.** **AKTU 2013-14(Sem-1), Marks 05**

Answer

Given : Volt-ampere rating = 400 kVA, η_{fl} = 98.77 %, pf = 0.8 and η_{hl} = 99.13 %, pf = 1

To Find : Copper loss, P_{Cu}; Iron loss, P_i.

A. At full-load and 0.8 power factor :

1. Output power, $P = 400 \times 0.8 = 320$ kW
2. Transformer efficiency, η = 98.77 % or 0.9877
3. Transformer input power $= \frac{P}{\eta} = \frac{320}{0.9877} = 323.985$ kW
4. Transformer losses,

$$(P_i + P_{Cu}) = \text{Input} - \text{Output}$$

$$= 323.985 - 320 = 3.985 \text{ kW} \quad ...(3.14.1)$$

B. At half-load and unity power factor :

1. Output power, $P' = \frac{1}{2} \times 400 \times 1 = 200$ kW
2. Transformer efficiency, η' = 99.13 % or 0.9913
3. Transformer input power $= \frac{P}{\eta} = \frac{200}{0.9913} = 201.755$ kW

4. Total losses $= P_i + \left(\frac{1}{2}\right)^2 P_{Cu}$ = Input – Output = 201.755 – 200 = 1.755 kW

or $P_i + 1/4\ P_{Cu} = 1.755$ kW ...(3.14.2)

C. Solving eq. (3.14.1) and (3.14.2), we have

i. Iron loss at full load = Iron loss at half load = P_i = 1.0117 kW

ii. Copper loss at full-load, P_c = 2.9733 kW

Then, Copper loss at half-load $= \left(\frac{1}{2}\right)^2 \times 2.9733 = 0.743325$ kW

Que 3.15. **A single phase 250 kVA transformer has an efficiency of 96 % on full load at 0.8 power factor and 97 % efficiency at half full load unit power factor. Calculate on half load :**

i. Iron losses

ii. Full load copper losses. **AKTU 2013-14(Sem-2), Marks 10**

Answer

The procedure is same as Q. 3.14, Page 3–17D, Unit-3.

(**Ans.** $P_{i\,hl}$ = 2.33 kW; $P_{Cu\,hl}$ = 1.49 kW; $P_{Cu\,fl}$ = 5.36 kW)

Que 3.16. **Derive the emf equation of a single-phase transformer. A single phase 100 kVA, 6.6 kV/230 V, 50 Hz transformer has 90 % efficiency at 0.8 lagging power factor both at full load and also at half load. Determine iron and copper loss at full load for transformer.**

AKTU 2014-15(Sem-2), Marks 10

Answer

A. EMF equation : Refer Q. 3.8, Page 3–9D, Unit-3.

B. Numerical :

The procedure is same as Q. 3.14, Page 3–17D, Unit-3.

(**Ans.** $P_{c\,fl}$ = 5925.98 W; P_i = 2962.91 W)

Que 3.17. **A 25 kVA, 2000/200 V transformer has full-load copper and iron losses are 1.8 kW and 1.5 kW respectively. Find :**

i. The efficiency at half the rated kVA and at unity power factor.

ii. The efficiency at full-load and at 0.8 power factor lagging.

iii. kVA load for maximum efficiency and value of maximum efficiency. **AKTU 2017-18(Sem-1), Marks 07**

Scanned by TapScanner

Answer

Given : Volt-ampere rating = 25 kVA, N = 2000/200 V, P_i = 1.5 kW, P_{Cu} = 1.8 kW

To Find :
i. η at $x = 1/2$ and $\cos\phi = 1$
ii. η at $x = 1$ and $\cos\phi = 0.8$
iii. kVA_{max} and η_{max}.

i. At half-load,

i.e., $x = 1/2$ and $\cos\phi = 1$

Efficiency,
$$\eta = \frac{x \times kVA \times \cos\phi}{x \times kVA \times \cos\phi + P_i + x^2 P_{Cu}}$$
$$= \frac{\frac{1}{2} \times 25 \times 1}{\times 25 \times 1 + 1.5 + \left(\frac{1}{2}\right)^2 \times 1.8}$$
$$= \frac{12.5}{12.5 + 1.5 + 0.45} = 0.865 \text{ (or 86.5 \%)}$$

ii. At full-load,

i.e, $x = 1$ and $\cos\phi = 0.8$

Efficiency,
$$\eta_{fl} = \frac{x \times kVA \times \cos\phi}{x \times kVA \times \cos\phi + P_i + x^2 P_{Cu}}$$
$$= \frac{1 \times 25 \times 0.8}{(1 \times 25 \times 0.8) + 1.5 + (1^2 \times 1.8)}$$
$$= \frac{20}{20 + 1.5 + 1.8} = 0.8584 \text{ (or 85.84 \%)}$$

iii. kVA load for maximum efficiency

$$kVA_{max} = \text{Rated kVA} \times \sqrt{\frac{P_i}{P_c}} = 25 \times \sqrt{\frac{1.5}{1.8}} = 22.82 \text{ kVA}$$

Losses at maximum efficiency,
$$P_i = x^2 P_{Cu} = 1.5 \text{ kW}$$

Maximum efficiency,
$$\eta_{max} = \frac{kVA_{max} \cos\phi}{kVA_{max} \cos\phi + P_i + P_i} = \frac{22.82 \times 1}{22.82 + 1.5 + 1.5}$$
$$= 0.8838 \text{ (or 88.38 \%)}$$

Que 3.18. **A 50 kVA transformer has a core loss of 400 W and a full load copper loss of 800 W. The power factor of the load is 0.9 lagging, calculate**

i. **Full load efficiency**
ii. **The maximum efficiency and the load at which maximum efficiency occurs.**

AKTU 2015-16(Sem-2), Marks 10

Answer

The procedure is same as Q. 3.17, Page 3–18D, Unit-3.

(**Ans. i.** η = 97 %, **ii.** η_{max} = 97.55 % and kVA = 35.35 kVA)

PART-3

Auto-Transformer and Three-Phase Transformer Connections.

CONCEPT OUTLINE : PART-3

- **Single-phase auto-transformer :** It is a single-winding transformer in which a part of the winding is common to both high-voltage and low-voltage sides.
- A 3ϕ system is used to generate and transmit large amount of power.
- 3ϕ transformers are required to step up or step down voltages in various stages of a power system network.

Questions-Answers

Long Answer Type and Medium Answer Type Questions

Que 3.19. **Explain single-phase auto-transformer and give its two applications.**

AKTU 2015-16(Sem-2), Marks 7.5

Answer

A. 1ϕ auto-transformer :

1. A 1ϕ auto-transformer is a one winding transformer in which a part of the winding is common to both high-voltage and low-voltage sides.
2. A two-winding transformer when electrically connected is known as auto transformer.
3. Let the two-winding transformer connected as an auto-transformer be regarded as ideal. With this assumption all voltages will be in phase and so will be all currents.
4. The two winding voltage ratio is

$$a = \frac{V_1 - V_2}{V_2} = \frac{N_1}{N_2} \quad \text{...(3.19.1)}$$

Scanned by TapScanner

5. The auto transformer voltage ratio is

$$a' = \frac{V_1}{V_2} = \frac{(V_1 - V_2) + V_2}{V_2}$$

$$a' = 1 + a \quad \text{...(3.19.2)}$$

6. Now $$(VA)_{TW} = (V_1 - V_2) I_1 = (I_2 - I_1) V_2 \quad \text{...(3.19.3)}$$

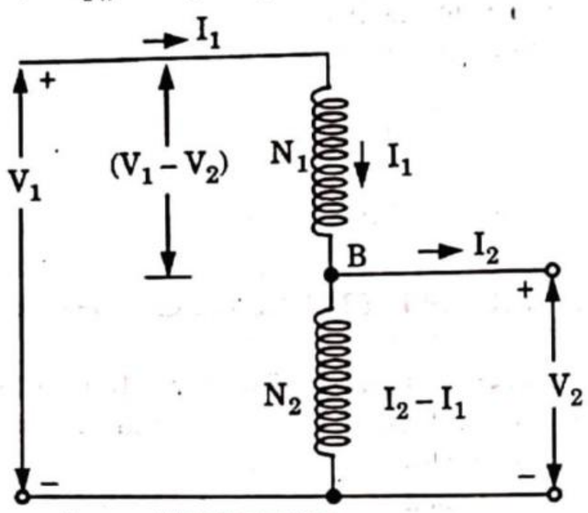

Fig. 3.19.1.

$$(VA)_{Auto} = V_1 I_1 = V_2 I_2$$

7. But $$\frac{I_2 - I_1}{I_1} = \frac{N_1}{N_2} = a$$

$$\frac{I_1}{I_2} = \frac{1}{1+a} \quad \text{...(3.19.4)}$$

8. Substituting eq. (3.19.4) in eq. (3.19.3)

$$(VA)_{TW} = \left(1 - \frac{1}{1+a}\right) V_2 I_2 = \left(1 - \frac{1}{a'}\right) (VA)_{Auto}$$

$$(VA)_{Auto} = \left(\frac{1}{1 - 1/a'}\right) (VA)_{TW} \quad \text{...(3.19.5)}$$

$$(VA)_{Auto} > (VA)_{TW} \quad \text{...(3.19.6)}$$

9. It is easily seen from eq. (3.19.5) that the nearer a' is to unity, the larger is $(VA)_{Auto}$ compared to $(VA)_{TW}$.
10. An auto transformer is applied for voltage ratios close to unity.

B. Applications :

1. It is used as balance coil to give neutral in a 3-wire AC distribution system.
2. It is used as boosters to raise the voltage in AC feeders.

Que 3.20. Draw delta-delta connection for 0° and 180° phase shift.

Answer

A. Delta-Delta (Δ-Δ) connection for 0° phase shift :

1. Fig. 3.20.1(*a*) shows the Δ – Δ connection of three identical single-phase transformers or three identical windings on each of the primary and secondary sides of the 3ϕ transformer.
2. Fig. 3.20.1(*b*) shows the phasor diagrams for lagging power factor cos ϕ.
3. The secondary line-to-line voltage V_{ab}, V_{bc} and V_{ca} are in phase with primary line-to-line voltage V_{AB}, V_{BC} and V_{CA} with voltage ratios equal to the turns ratio :

$$\frac{V_{AB}}{V_{ab}} = \frac{V_{BC}}{V_{bc}} = \frac{V_{CA}}{V_{ca}} = a$$

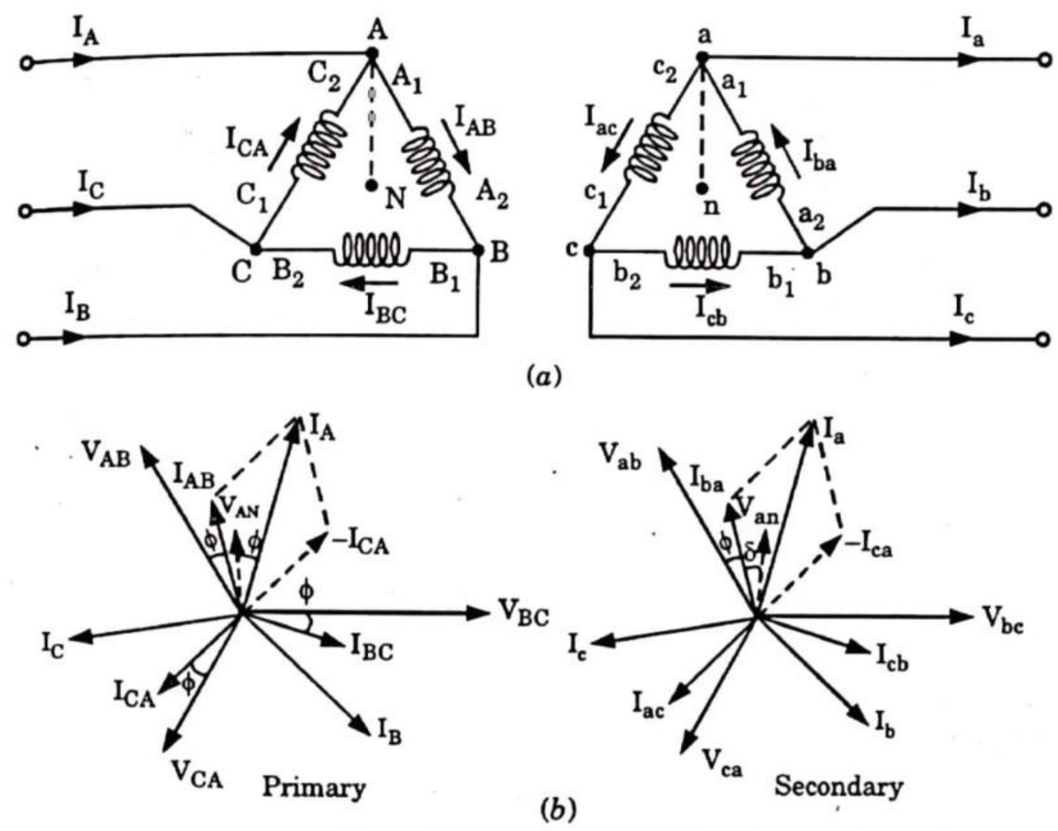

Fig. 3.20.1. Delta-Delta connection of transformer (0° phase shift).

4. The current ratios when the magnetizing current is neglected are

$$\frac{I_{AB}}{I_{ab}} = \frac{I_{BC}}{I_{bc}} = \frac{I_{CA}}{I_{ca}} = \frac{I_A}{I_a} = \frac{I_B}{I_b} = \frac{I_C}{I_c} = \frac{1}{a}$$

5. It is to be noted that in Fig. 3.20.1 each winding is drawn along the line of the phasor of its induced voltage.
6. The primary and secondary line voltages are in phase. This connection is called 0° – connection.

B. Delta-Delta connection (Δ – Δ) for 180° phase shift :

Scanned by TapScanner

1. The connections of the phase windings are reversed on either side to obtain the phase difference of 180° between the primary and secondary systems. Such a connection is known as 180° – connection.
2. In Fig. 3.20.2 delta-delta connection with 180° phase shift is shown.

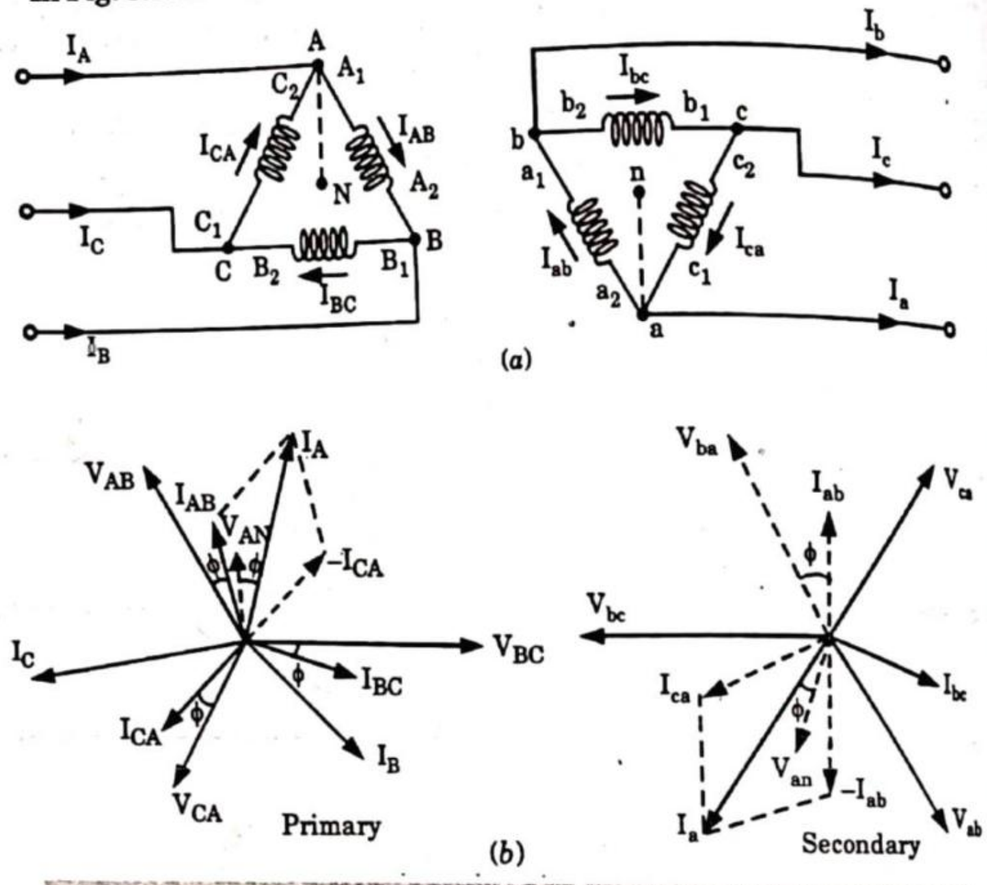

Fig. 3.20.2. Delta-Delta connection of transformer (180° phase shift).

Que 3.21. **Draw and explain the connection diagram of Y-Y transformer.**

Answer

1. Fig. 3.21.1 shows the $Y-Y$ connection of three identical single-phase transformers or the three identical windings on each of the primary and secondary sides of the 3ϕ transformer.
2. The phase current is equal to the line current and they are in phase.
3. The line voltage is $\sqrt{3}$ times the phase voltage. There is a phase separation of 30° between line and phase voltages.
4. For ideal transformer the voltage ratios are

$$\frac{V_{AN}}{V_{an}} = \frac{V_{BN}}{V_{bn}} = \frac{V_{CN}}{V_{cn}} = a$$

and current ratios are

$$\frac{I_A}{I_a} = \frac{I_B}{I_b} = \frac{I_C}{I_c} = \frac{1}{a}$$

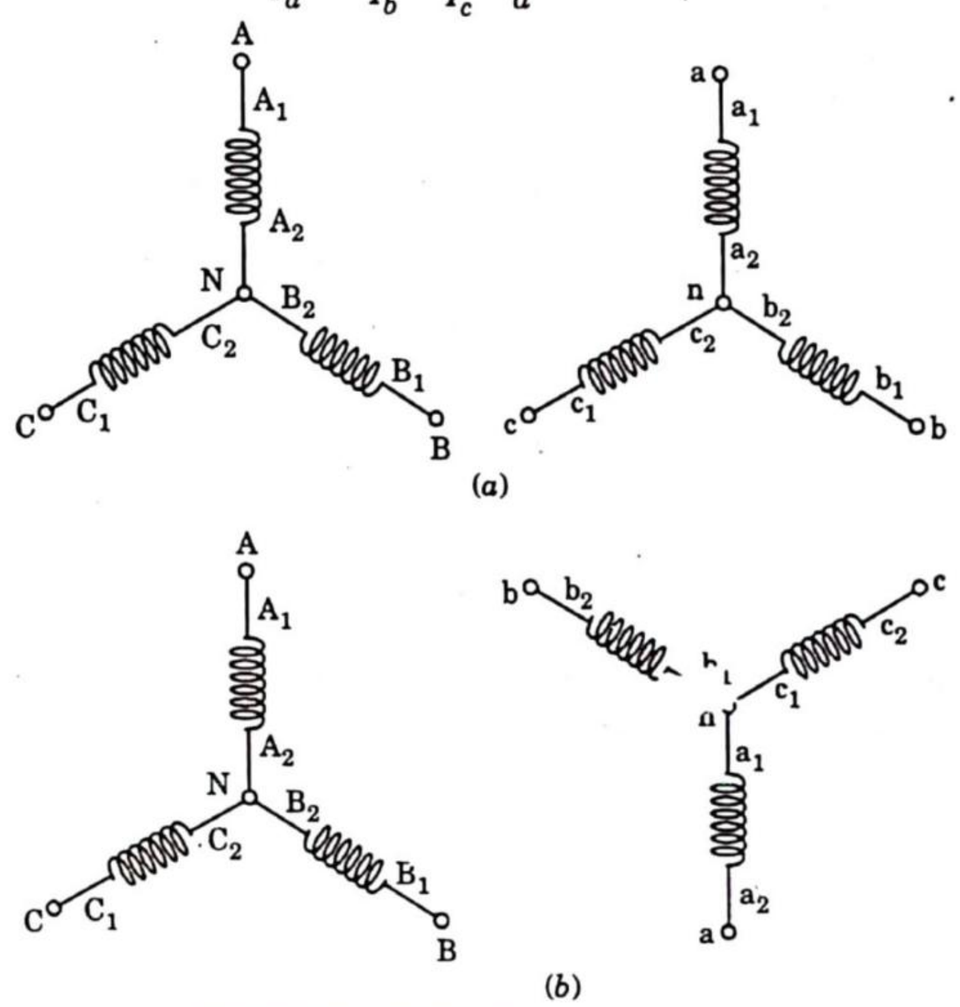

Fig. 3.21.1. Star-star connection of transformer (*a*) 0° phase shift (*b*) 180° phase shift.

☺☺☺

Scanned by TapScanner

4 UNIT

Electrical Machines

Part-1 ..... **(4–2D to 4–22D)**

- *DC Machines : Principle, Construction and Types*
- *EMF Equation of Generator and Torque Equation of Motor*
- *Applications of DC Motor (Simple Numerical Problems)*

A. Concept Outline : Part-1 ..... 4–2D
B. Long and Medium Answer Type Questions 4–2D

Part-2 ..... **(4–22D to 4–32D)**

- *Three Phase Induction Motor : Principle, Construction and Types*
- *Slip-Torque Characteristics*
- *Applications (Numerical Problem Related to Slip only)*

A. Concept Outline : Part-2 ..... 4–22D
B. Long and Medium Answer Type Questions 4–23D

Part-3 ..... **(4–32D to 4–38D)**

- *Single Phase Induction Motor : Principle of Operation*
- *Introduction to Methods of Starting*
- *Applications*

A. Concept Outline : Part-3 ..... 4–32D
B. Long and Medium Answer Type Questions 4–32D

Part-4 ..... **(4–38D to 4–43D)**

- *Three Phase Synchronous Machines : Principle of Operation of Alternator and Synchronous Motor and their Applications*

A. Concept Outline : Part-4 ..... 4–38D
B. Long and Medium Answer Type Questions 4–39D

PART-1

DC Machines : Principle and Construction, Types, EMF Equation of Generator and Torque Equation of Motor, Applications of DC Motor (Simple Numerical Problems).

CONCEPT OUTLINE : PART-1

- DC machine is an alternating current machine, furnished with a special device called the commutator, which under certain condition converts into DC and vice versa.
- **Types of DC generator :**

1. Series generator
2. Shunt generator

- **Types of DC motor :**

1. DC series motor
2. DC shunt motor
3. Cumulatively compounded motor
4. Differentially compounded motor

Questions-Answers

Long Answer Type and Medium Answer Type Questions

Que 4.1. **Explain the principle of working of DC generator.**

Answer

1. DC generator works on the principle of Faraday's law of electromagnetic induction.
2. Consider elementary generator as shown in Fig. 4.1.1.
3. When the mechanical input *i.e.*, $P_m = T\omega$ (Torque × Angular speed) is given to generator, armature conductors start rotating. These armature conductors cut the magnetic field set up by the field poles electromagnetically.
4. Hence an emf is induced in armature whose direction is decided by Lenz's law, *i. e.*, to oppose the cause producing it.
5. This emf is known as generated emf in case of generator. To create the flux electromagnetically, poles are wound with field coils. When field current flows through these field coils, flux ϕ is set up whose magnitude is directly proportional to field current I_f.

Scanned by TapScanner

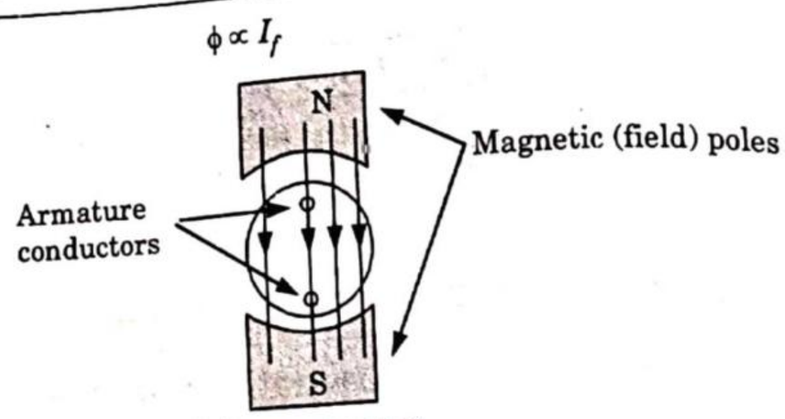

Fig. 4.1.1.

6. Thus in armature, alternating emf is generated which will be converted into direct current (DC) with the help of commutator and brushes.

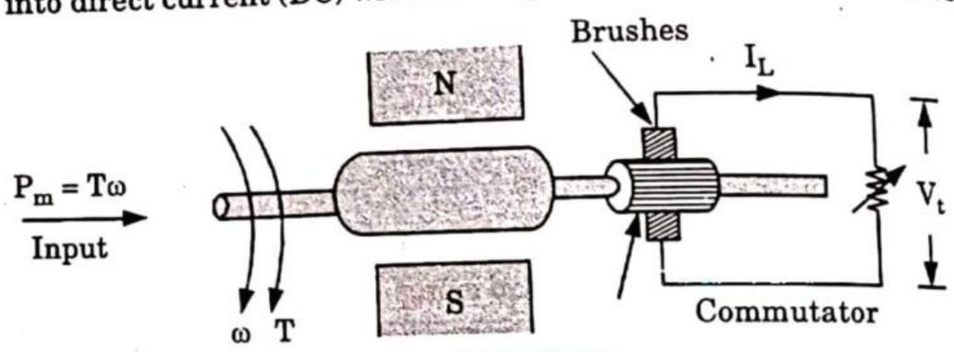

Fig. 4.1.2.

Que 4.2. **Explain the working principle of DC motor.**

Answer

1. DC motor has two basic coils namely field coil and armature coil as shown in Fig. 4.2.1.

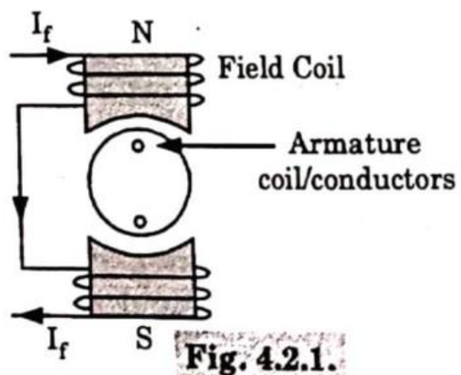

Fig. 4.2.1.

2. When the DC supply is given to motor, current flows through field coil as well as armature coil. Due to this field, poles are magnetised and flux sets up.
3. Due to interaction of this field flux and armature current, torque is generated (T_a). The direction of torque is given by Fleming's left hand rule.

4. Since armature current is of alternating nature, due to commutation unidirectional torque (T_a) is generated whose magnitude is directly proportional to ϕ and I_a.
5. Thus electrical input P_e is converted into mechanical output P_m in DC motor.

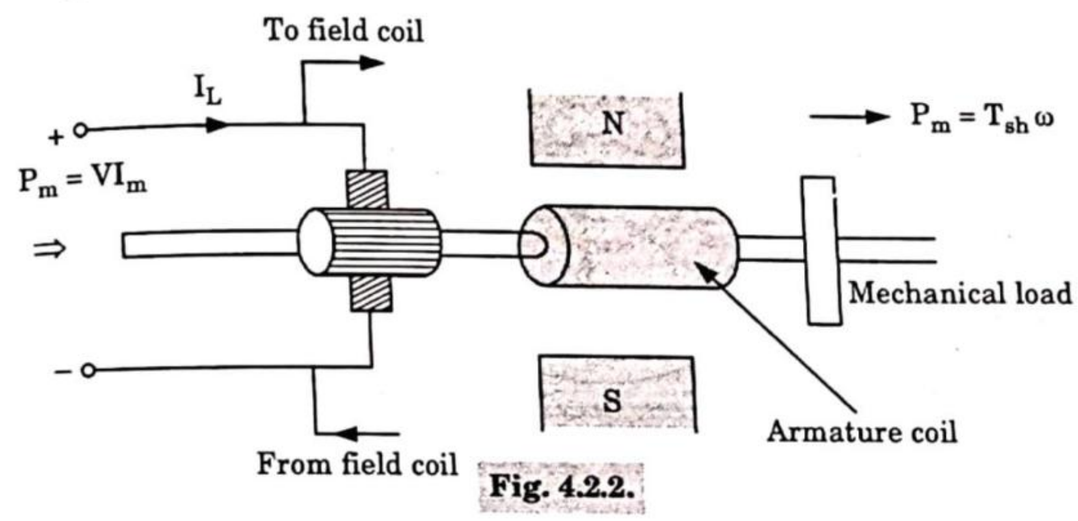

Fig. 4.2.2.

Que 4.3. **Give the construction and principle of DC machine.**

Answer

A. Construction of DC machine :

a. Stator

1. Yoke (or frame) is made of unlaminated ferromagnetic material. Yoke is made up of cast iron for small machines and of fabricated steel for larger machines (for higher permeability).
2. Salient field poles bolted to the inner periphery of the yoke, and bearings, brush-rigging carrying brush holders, end covers etc.
3. Field poles are made up of stacks of steel plates, riveted together. The pole core where the field winding is wound, is usually of smaller cross-section than the pole shoe, so as to :

a. Reduce amount of copper used for field winding.

b. Reduce air gap reluctance.

c. Provide mechanical strength and support to field winding.

4. When the field winding is excited with DC, north and south poles are produced. Both armature core and yoke, carries half of flux per pole.
5. The brush-rigging as shown in Fig. 4.3.1 consists of a group of brush holders and their attachment to the yoke or end cover.

Scanned by TapScanner

6. Stationary carbon brushes are housed in the brush holders and are kept pressed on to the commutator surface by means of tension controlled springs.

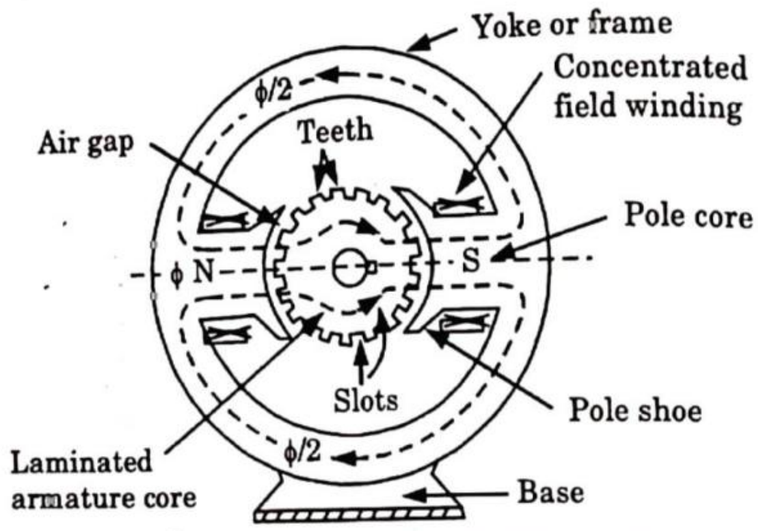

Fig. 4.3.1. Constructional features of a 2-pole DC machine.

b. Rotor :

1. Rotor is the rotating part also called armature.
2. The insulated conductors are put in the slot of the armature core. Armature core consists of a stack of circular steel laminations, about 0.4 to 0.6 mm thick, insulated from each other to avoid eddy current losses.

B. Principle of operation of DC motor : Refer Q. 4.2, Page 4–3D, Unit-5.

Que 4.4. **What are the different types of DC machine ? Also write the applications of each.**

OR

Draw and discuss the construction and principle of operation of a DC motor and also give some of its applications.

AKTU 2017-18(Sem-1), Marks 07

Answer

A. Construction : Refer Q. 4.3, Page 4–4D, Unit-4.

B. Principle : Refer Q. 4.2, Page 4–3D, Unit-4.

C. Types of DC machine : Depending on methods of excitation the DC machines are classified into two groups :

1. **Separately excited DC machine (generator/motor)**

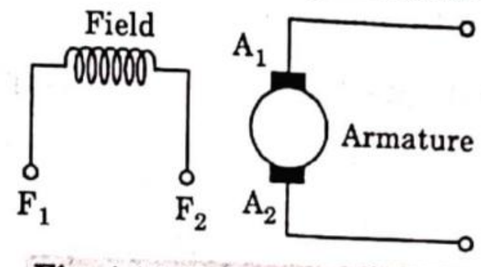

Fig. 4.4.1. Separate excitation.

2. **Self excited DC machine :**

a. **Shunt excitation of DC shunt machine :** If field winding and armature winding is connected in parallel, the machine is known as DC shunt machine.

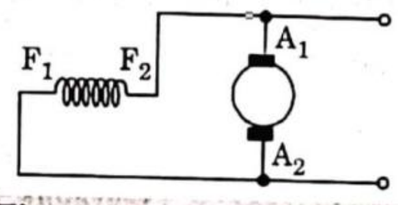

Fig. 4.4.2. DC shunt machine.

b. **Series excitation of DC series machine :** If field winding is connected in series with the armature winding, the DC machine is known as DC series machine.

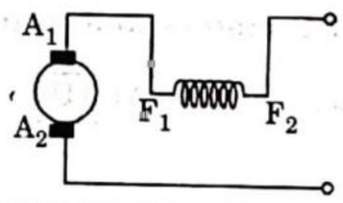

Fig. 4.4.3. DC series machine.

c. **Compound excitation or DC compound machine :** If both series and shunt field windings are present, along with the armature winding, the machine is known as DC compound machine.

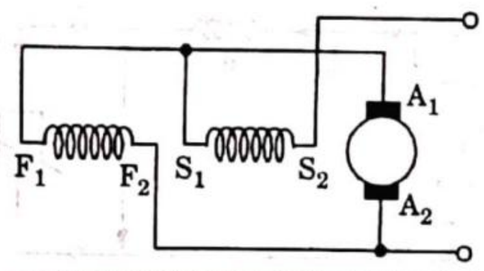

Fig. 4.4.4. DC compound machine.

Scanned by TapScanner

D. Applications of DC machines :

S. No.	Types of DC Machines	Applications
1.	DC shunt generator	For electroplating, Battery charging, excitation of alternators.
2.	Series generators	Used as boosters, for supply to arc lamps.
3.	Compound generator	To supply power DC welding machines, for offices, hostels and lodges, to compensate the voltage drop in feeders.
4.	Separately excited generator	For the testing purposes.
5.	DC shunt motors	In Lathes, Drills, Boring mills, Shapers, and weaving machines.
6.	DC series motor	In Electric traction, Cranes, Elevators, Air compressor, Vacuum cleaner, Hair dryer.
7.	DC compound motor	In Presses shears, Reciprocating machine.

Que 4.5. **Classify DC motors and write current and voltage equation for each type.** **AKTU 2014-15(Sem-2), Marks 05**

Answer

A. Classification : Refer Q. 4.4, Page 4–5D, Unit-4.

B. Current and voltage equations :

i. Equations for series generators :

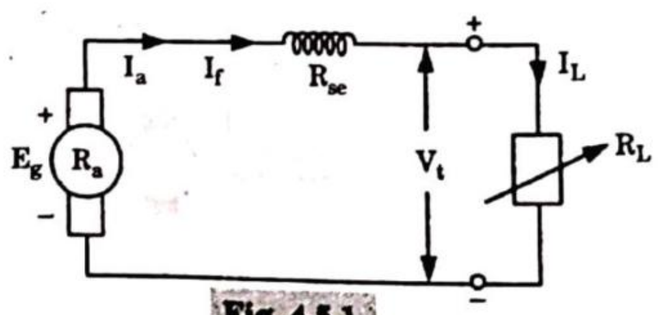

Fig. 4.5.1.

i. $I_a = I_f = I_L$

ii. $E_g - V_{drop} = I_a R_a + I_a R_{se} + V_t$

$\therefore$ $E_g = V_t + I_a (R_a + R_{se}) + V_{drop}$

iii. Load power, $P_L = V_t I_L$

ii. Equations for shunt generators :

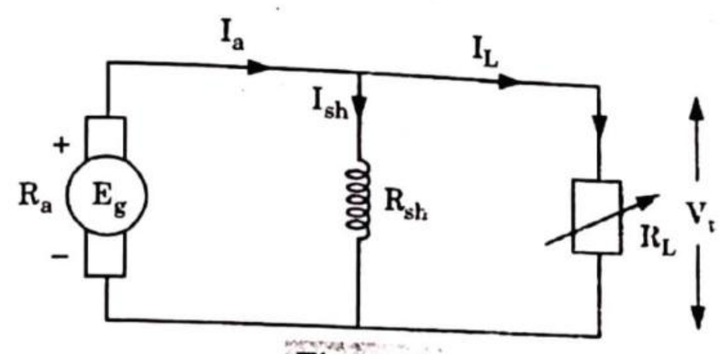

Fig. 4.5.2.

i. $V_t = I_{sh} R_{sh}$

ii. $I_a = I_L + I_{sh}$

iii. $E_g = V_t + I_a R_a + V_{drop}$

iv. $P_L = V_t I_L$

Que 4.6. **Derive the expression for generated emf in DC machine. Explain the term back emf when applied to DC motor. Briefly explain what role back emf plays in starting and running of motor ?**

AKTU 2015-16(Sem-1), Marks 10

Answer

A. Derivation :

1. Let
P = Number of poles
ϕ = Flux per pole
N = Speed of rotation
Z = Number of conductors around the armature
A = Number of parallel paths

2. The time taken by the armature for one revolution

$$= \frac{1}{N} \text{min} = \frac{60}{N} \text{sec}$$

3. Hence, time taken by each armature conductor to move through one pole pitch

$$t = \frac{60}{N} \times \frac{1}{P} \text{ sec}$$

4. During this period, the conductor cuts all the flux ϕ, produced by the pole and the average emf induced per conductor

Scanned by TapScanner

$$= \phi \times \frac{NP}{60} = \frac{\phi NP}{60} \text{ volts/conductor}$$

5. The emf of a DC generator

E = (emf induced per conductor) × (number of conductors per parallel path)

$$= \frac{\phi NP}{60}\left(\frac{Z}{A}\right)$$

$$E = \frac{\phi ZNP}{A \times 60}$$

$$E = \frac{\phi ZPn}{A} \text{ volts}$$

where n is rps.

6. For a given DC generator P, Z and A are fixed and hence E is proportional to ϕ and n (*i.e.*, $E \propto \phi n$).

7. In case of motor, this emf is known as back emf E_b

$$E_b = \frac{\phi ZN}{60}\frac{P}{A}$$

B. Role of back emf : The presence of back emf makes the DC motor a self regulating machine, *i.e.*, it makes the DC motor to draw as much armature current as is just sufficient to develop the required load torque.

Que 4.7. **Find torque equation of a DC Motor.**

AKTU 2014-15(Sem-2), Marks 05

OR

Write the expression for the induced emf and torque of a DC machine. What is the value of the constant relating ω and n ?

AKTU 2014-15(Sem-1), Marks 10

OR

Derive emf equation of DC machine. Also deduce the expression for torque of a dc machine. **AKTU 2016-17(Sem-2), Marks 07**

Answer

A. Emf equation : Refer Q. 4.6, Page 4–8D, Unit-4.

B. Torque equation :

1. Voltage equation of a DC motor is $V = E + I_a R_a$

Multiplying both sides by I_a

$$VI_a = EI_a + I_a^2 R_a$$

where, VI_a = Electrical power input to rotor

$I_a^2 R_a$ = Copper loss in armature.

2. We know, Input = Output + Losses

3. Mechanical power developed by the armature,

$$P_m = \omega\tau_{av} = 2\pi n\tau_{av}$$

$$P_m = EI_a = \omega\tau_{av} = 2\pi n\tau_{av}$$

EI_a = Electrical equivalent of gross mechanical power developed by the armature

τ_{av} = Average electromagnetic torque developed by the armature in Newton metres (N-m)

4. Also, $$E = \frac{nP\phi Z}{A}$$

Therefore, $$\frac{nP\phi Z}{A} I_a = 2\pi n\tau_{av} \quad \therefore \quad \tau_{av} = \frac{PZ}{2\pi A}\phi I_a$$

C. As $\omega = \frac{2\pi N}{60}$, the constant relating to ω and N is $\frac{2\pi}{60}$ (= 0.10472).

Que 4.8. **Draw and explain the operating characteristics of DC series motor.**

Answer

A. Speed-armature current (N-I_a) characteristics :

1. In case of DC motors, $N \propto \frac{E_b}{\phi}$ ...(4.8.1)

where, N = Speed in rpm

E_b = Back emf,

ϕ = Flux / pole.

2. Also $\phi \propto I_a$ (Since $I_f = I_a$) ...(4.8.2)

And $E_b = V - I_a(R_a + R_{se})$ ...(4.8.3)

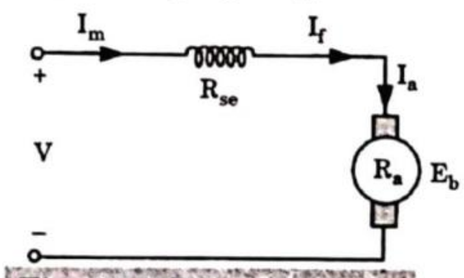

Fig. 4.8.1. DC series motor.

3. At low values of I_a, flux will be very small. Hence the speed will be very high, as per eq. (4.8.1) and (4.8.2).

4. As I_a increases, the flux increases and hence the speed decreases as shown by curve I in Fig. 4.8.2.

Scanned by TapScanner

5. As I_a increases, I_a $(R_a + R_{se})$ drop increases, thus E_b decreases and speed also decreases as per eq. (4.8.1) and (4.8.3). This decrease in speed due to ohmic drop is shown by curve II in Fig. 4.8.2.

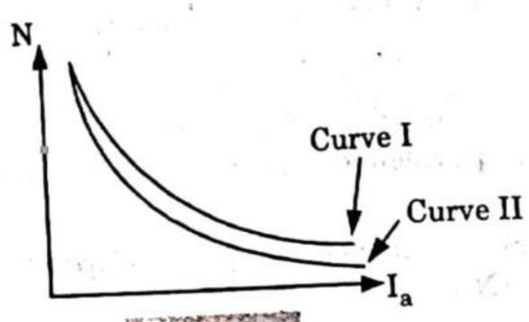

Fig. 4.8.2.

B. Torque-current ($T - I_a$) characteristics :

In case of DC motor $T \propto \phi I_a$ ...(4.8.4)

In Fig. 4.8.3,

i. Before saturation :

$$\phi \propto I_f \quad i.e., \phi \propto I_a \qquad ...(4.8.5)$$

From eq. (4.8.4) and (4.8.5)

$$T \propto I_a^2 \qquad ...(4.8.6)$$

∴ The curve will be parabolic in nature.

ii. After saturation : ϕ is constant.

$$\therefore \quad T \propto I_a$$

Hence the characteristics will be a straight line.

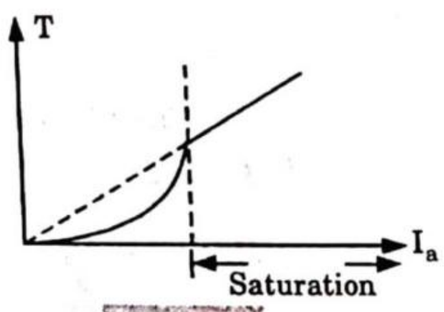

Fig. 4.8.3.

C. Speed-Torque (N–T) characteristics :

1. As I_a increases, torque increases as per eq. (4.8.4). This will decrease the speed as discussed in N–I_a characteristics.
2. The further development is exactly similar to N–I_a characteristics.

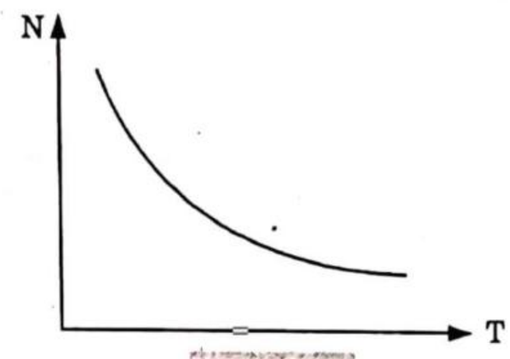

Fig. 4.8.4.

Que 4.9. **Draw and explain the characteristics of DC shunt motor.**

Answer

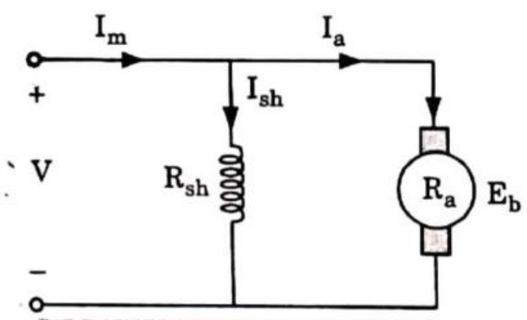

Fig. 4.9.1. DC shunt motor.

1. For DC shunt motor

$$I_m = I_a + I_{sh} \qquad ...(4.9.1)$$

$$E_b = V - I_a R_a \qquad ...(4.9.2)$$

$$\phi \propto I_{sh} \text{ and } I_{sh} = \frac{V}{R_{sh}} \qquad ...(4.9.3)$$

$$N \propto \frac{E_b}{\phi} \qquad ...(4.9.4)$$

2. Since supply voltage V and shunt field resistance R_{sh} is constant, I_{sh} and hence flux is practically constant.
3. As I_a increases, ohmic drop $I_a R_a$ increases, which will decrease E_b. Thus speed N will decrease as armature current I_a increases.

A. Torque-current (T–I_a) or speed-current (N–I_a) characteristics of DC shunt motor :

1. In case of DC shunt motor, since I_{sh} is constant so flux ϕ is practically constant.

$$\therefore \quad T \propto \phi I_a$$

Scanned by TapScanner

If ϕ = Constant, then $T \propto I_a$, *i.e.*, as armature current increases, torque will also increase.

2. At starting upto small value of armature current I_{a0}, torque of shaft will be zero. After I_{a0}, as current increases, torque will increase linearly. This is shown by curve I in Fig. 4.9.2.

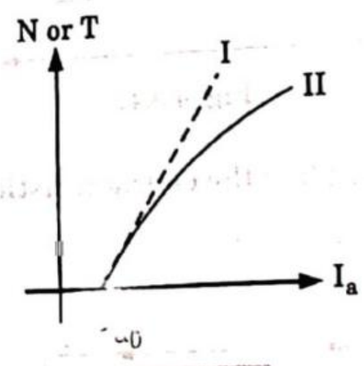

Fig. 4.9.2.

3. As armature current I_a increases, armature reaction will also increase. This will decrease the total flux ϕ.

   ∴ Actual characteristics will be as shown in curve II in Fig. 4.9.2

B. Speed torque (*N–T*) characteristics of DC shunt motor :

1. At $I_a = I_{sh}$, *i.e.*, at small values of torque, the speed N will be of rated value.
2. As I_a increases, *i.e.*, as torque increases, since E_b decreases due to I_aR_a drop, speed will slightly decrease.

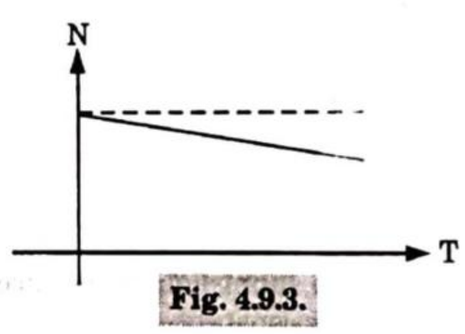

Fig. 4.9.3.

Que 4.10. Draw and explain the characteristics of DC compound motor.

Answer

A. *N–I*$_a$ characteristics :

1. Consider N–I_a characteristics of shunt motor as shown in Fig. 4.10.2 by curve I.
2. As I_a increases, series flux ϕ_{se} increases whereas shunt flux ϕ_{sh} remains practically constant.

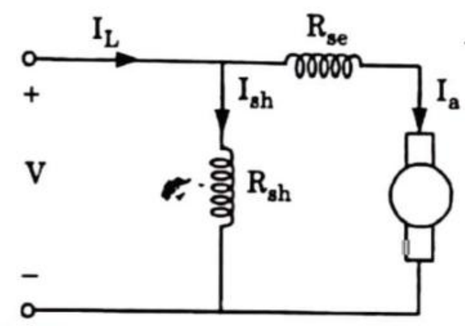

Fig. 4.10.1. Long shunt compound connections.

3. For cumulatively compounded motor, total flux ϕ_T increases as I_a increases.

   Since $\phi_T = \phi_{sh} + \phi_{se}$

   ∴ Speed N decreases as $N \propto \dfrac{1}{\phi_T}$. This is shown in characteristics by curve II in Fig. 4.10.2.

4. For differentially compounded motor total flux $\phi_T = \phi_{sh} - \phi_{se}$

   ∴ As I_a increases, ϕ_{se} increases which decreases the total flux ϕ_T

   ∴ Speed N will increase, sin[illegible]ases. This is shown by curve III in Fig. 4.10.2.

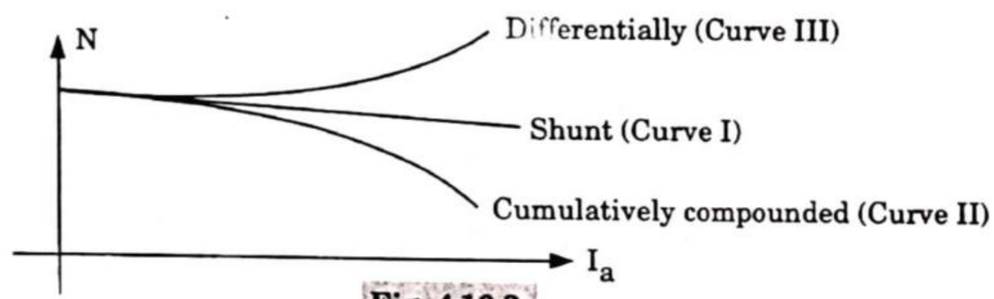

Fig. 4.10.2.

B. *T–I*$_a$ characteristics :

1. Consider T–I_a characteristics of DC shunt motor. If effect of series winding flux is added to motor, the characteristics will belong to DC compound motor.
2. As I_a increases, series flux ϕ_{se} increases.
3. For cumulatively compounded motor, the total flux ϕ_T increases since $\phi_T = \phi_{sh} + \phi_{se}$

   This increases the torque since $T \propto I_a \phi$.

   The increase in torque is shown by curve II in Fig. 4.10.3 in case of cumulatively compounded motor.
4. In case of differentially compounded motor, the total flux ϕ_T decreases with the increase in armature current I_a. This is due to $\phi_T = \phi_{sh} - \phi_{se}$ and ϕ_{se} increases as I_a increases.

Scanned by TapScanner

∴ Torque will be less as compared to shunt motor, as shown by curve III in Fig. 4.10.3.

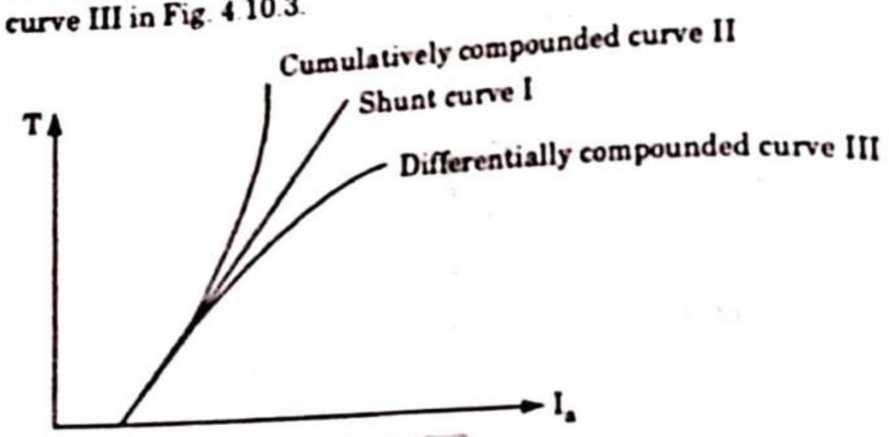

Fig. 4.10.3.

C. *N–T* characteristics of DC compound motor : The *N–T* characteristics are exactly similar to the N–I_a characteristics of DC compound generator.

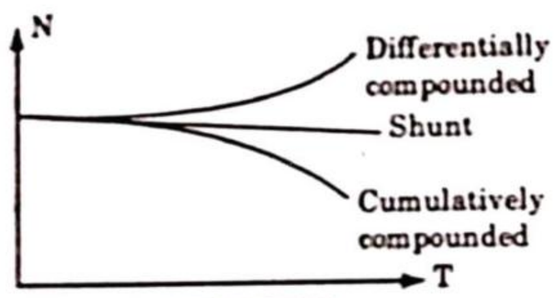

Fig. 4.10.4.

Que 4.11. **How can the speed of DC motor be varied ? Explain the method by which you can vary speed above and below the base speed.** **AKTU 2013-14(Sem-2), Marks 10**

Answer

Speed of motor can be varied by varying field flux and armature resistance.

A. Field flux control method :

1. Since the flux is produced by the field current, control of speed by this method is obtained by control of the field current.
2. In the shunt motor, this is done by connecting a variable resistor R_c in series with the shunt field winding as shown in Fig. 3.11.1. The resistor R_c is shunt field regulator.
3. The shunt field current is given by $I_{sh} = \dfrac{V}{R_{sh} + R_c}$.

4. The connection of R_c in the field reduces the field current and hence the flux ϕ is also reduced.
5. The reduction in flux will result in an increase in the speed.
6. Consequently, the motor runs at a speed higher than normal speed.

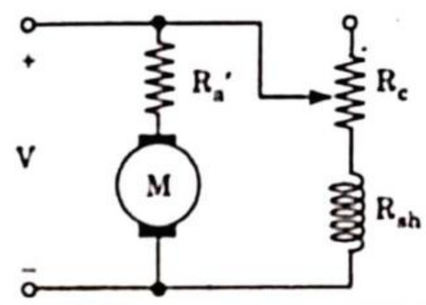

Fig. 3.11.1. Speed-control of a DC shunt motor by variation of field flux.

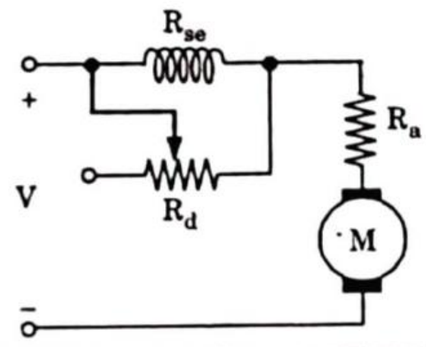

Fig. 3.11.2. Diverter in parallel with the series of DC motor.

7. For this reason, this method of speed-control is used to give motor speeds above normal or to correct for a fall in speed due to load.
8. The variation of field current in a series motor is done by a variable resistance R_d is connected in parallel with the series field windings as shown in Fig. 3.11.2. The parallel resistor is called the diverter. A portion of the main current is diverted through R_d.

   Thus, the diverter reduces the current flowing through the field winding. This reduces the flux and increases the speed.
9. Fig. 3.11.3(*a*) and 3.11.3(*b*) shows the typical speed/torque curves for shunt and series motors respectively, whose speed are controlled by the variation of the field flux.

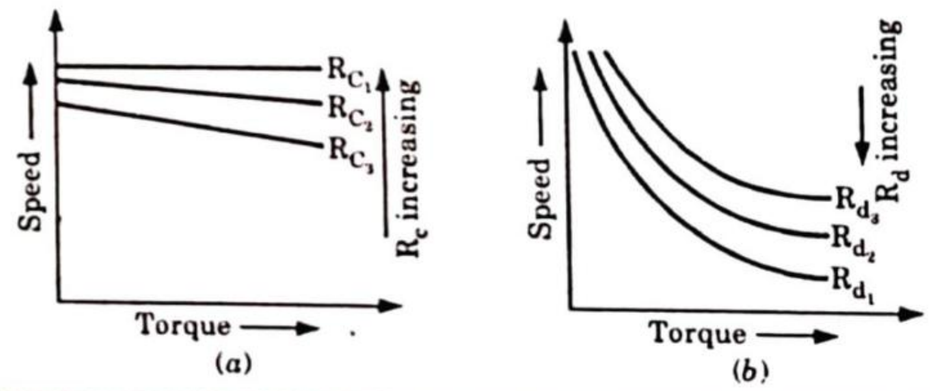

Fig. 3.11.3. Typical speed-torque curves (a) shunt motor (b) series motor.

B. Armature resistance control method :

1. In this method a variable series resistor R_e is put in the armature circuit.
2. In this case, the field is directly connected across the supply and therefore the flux ϕ is not affected by variation of R_e.

Scanned by TapScanner

3. Fig. 3.11.5 shows the method of connection of external resistance R_e in the armature circuit of a DC series motor.
4. In this case the current and hence the flux are affected by the variation of the armature circuit resistance.
5. The voltage drop in R_e reduces the voltage applied to the armature and therefore the speed is reduced.
6. Fig. 3.11.6(*a*) and 3.11.6(*b*) shows typical speed-current characteristics for shunt and series motors respectively.

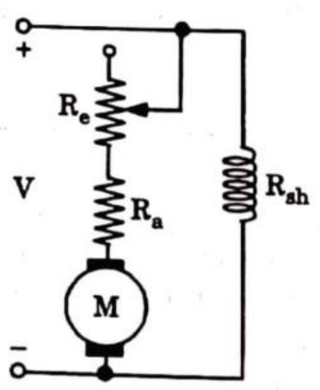

Fig. 3.11.4. Speed-control of a DC shunt motor by armature resistance control.

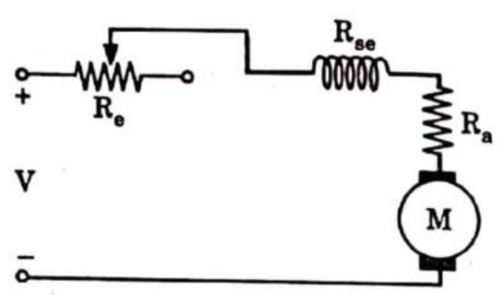

Fig. 3.11.5. Speed-control of a DC series motor by armature resistance control.

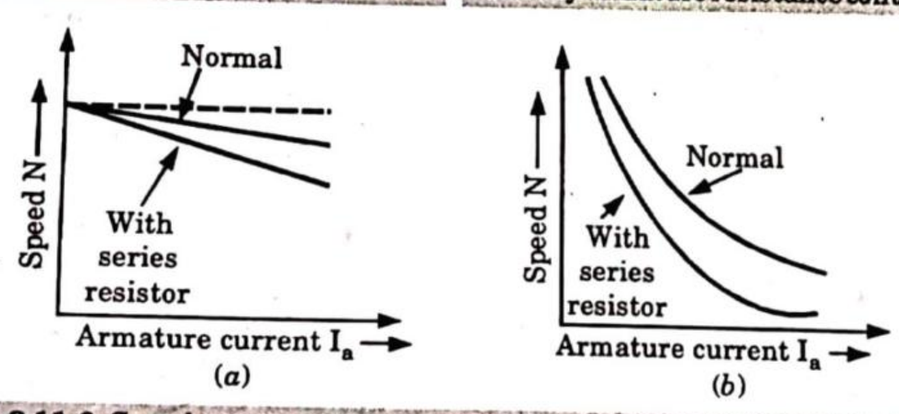

Fig. 3.11.6. Speed-current characteristics (a) shunt motor (b) series motor.

7. In both the cases the motor runs at a lower speed as the value of R_e is increased.
8. Since R_e carries full armature current, it must be designed to carry continuously the full armature current.

Que 4.12. **A 4-pole DC generator with wave connected armature has 41 slots and 12 conductors/ slots. Armature resistance and shunt field resistance are 0.5 Ω and 200 Ω. Flux per pole is 125 mWb. Speed N = 1000 rpm, calculate the voltage drop across terminals. The load resistance is 10 Ω.** **AKTU 2013-14(Sem-1), Marks 05**

Answer

Given : No. of slots = 41, Conductor/slots = 12, $P = 4$, $R_a = 0.5\ \Omega$, $R_{sh} = 200\ \Omega$, N = 1000 rpm, ϕ/pole = 125 mWb, $R_L = 10\ \Omega$
To Find : Voltage drop, V_d.

1. Generated emf, $E_g = \dfrac{\phi NZ}{60} \times \dfrac{P}{A} = \dfrac{125 \times 10^{-3} \times 1000 \times 41 \times 12}{60} \times \dfrac{4}{2}$
$= 2050$ V
2. Let the voltage across 10 Ω load resistance be V volts.
Load current, $I_L = \dfrac{V_d}{10}$
Shunt field current, $I_{sh} = \dfrac{V_d}{R_{sh}} = \dfrac{V_d}{200}$
3. Armature current $I_a = I_L + I_{sh} = \dfrac{V_d}{10} + \dfrac{V_d}{200} = \dfrac{21\,V_d}{200}$
4. As generated $E_g = V_d + I_a R_a$, neglecting voltage drop
$$2050 = V_d + \frac{21V_d}{200} \times 0.5 = \frac{421}{400} V_d$$
Voltage drop, $V_d = \dfrac{2050 \times 400}{421} = 1947.7$ V

Que 4.13. **A 230 V DC series motor is taking 50 A. Resistance of armature and series field winding is 0.2 Ω and 0.1 Ω respectively. Calculate :**
i. Brush voltage
ii. Back emf. **AKTU 2013-14(Sem-2), Marks 05**

Answer

Given : $V = 230$ V, $R_a = 0.2\ \Omega$, $R_{se} = 0.1\ \Omega$, $I = I_a = I_{se} = 50$ A
To Find : Brush voltage and back emf.

1. For series motor, $V = E_b + I(R_a + R_{se}) + V_b$
2. Let brush contact drop = 1 V/ brush
i. **Brush voltage,** $V_b = 2 \times 1 = 2$ V
ii. **Back emf,** $E_b = V - I(R_a + R_{se}) - V_b$
$= 230 - 50\,(0.2 + 0.1) - 2 = 213$ V

Que 4.14. **A 6-pole lap wound DC shunt motor has 250 armature conductors, a flux of 0.04 wb/pole and runs at 1200 rpm. The armature**

Scanned by TapScanner

and field winding resistances are 1 ohm and 220 ohm respectively. It is connected to a 220 V DC supply. Determine

i. Induced emf in the motor
ii. Armature current
iii. Input supply current
iv. Mechanical power developed in the motor
v. Torque developed.

AKTU 2015-16(Sem-2), Marks 10

Answer

Given : $\phi = 0.04$ wb/pole, $P = A$, $Z = 250$, $N = 1200$ rpm, $R_a = 1\ \Omega$
$R_{sh} = 220\ \Omega$, $V = 220$ V
To Find : E_a, I_a, I, P and T.

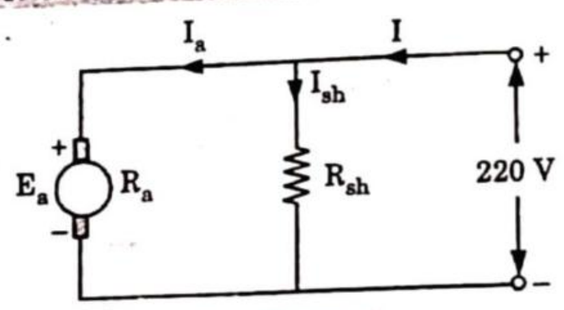

Fig. 4.14.1.

1. $\because$ $$E = \frac{NP\phi Z}{60\,A}$$

$$E_a = \frac{1200 \times 0.04 \times 250}{60}$$

Induced emf, $E_a = 200$ V

2. $\because$ $$V = E_a + I_a R_a$$

$$I_a = \frac{V - E_a}{R_a} = \frac{220 - 200}{1}$$

Armature current, $I_a = 20$ A

3. $$I_{sh} = \frac{V}{R_{sh}} = \frac{220}{220} = 1\text{ A}$$

Input current, $I = I_{sh} + I_a = 21$ A

4. **Mechanical power,**

$$P = E_a I_a = 200 \times 20 = 4\text{ kW}$$

5. **Torque,** $$T = \frac{P}{\omega} = \frac{P}{\frac{2\pi N}{60}} = \frac{60 \times 4000}{2 \times 3.14 \times 1200} = 31.83\text{ N-m}$$

Que 4.15. **A 120 V DC shunt motor having an armature circuit resistance of 0.2 Ω and field circuit resistance of 60 Ω, draw line**

current of 40 A at full load. The brush voltage drop is 3 V and rated full load speed is 1800 rpm. Calculate

i. **The speed at half load**
ii. **The speed at 125 % of full load.**

AKTU 2016-17(Sem-1), Marks 07

Answer

Given : $V_t = 120$V, $R_a = 0.2\ \Omega$, $R_f = 60\ \Omega$, $I_L = 40$ A (at full load)
$V_{brush} = 3$ V, full load speed, $N_1 = 1800$ rpm
To Find : Speed at half load, N_2; Speed at 125 % of full load, N_3.

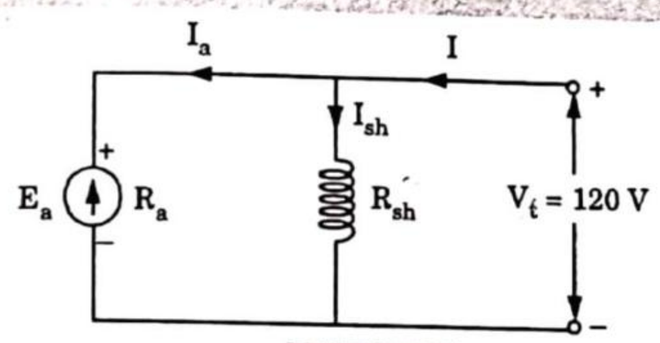

Fig. 4.15.1.

1. $$I_{sh} = \frac{V_t}{I_{sh}} = \frac{120}{60} = 2\text{ A}$$

2. $$I_{a1} = I_L - I_{sh} = 40 - 2 = 38\text{ A}$$

3. $$E_{a1} = V_t - I_{a1}R_a - \text{voltage drop}$$
$$= 120 - (38 \times 0.2) - 3 = 109.4\text{ V}$$

4. At half load, $$I_{L1} = \frac{40}{2} = 20\text{ A}$$
$$I_{a2} = 20 - 2 = 18\text{ A}$$
$$E_{a2} = V_t - I_{a2}R_a - \text{voltage drop}$$
$$= 120 - (18 \times 0.2) - 3 = 113.4\text{ V}$$

5. **Speed at half load,**

$$N_2 = \frac{E_{a2}}{E_{a1}} \times N_1$$
$$= \frac{113.4}{109.4} \times 1800 = 1865.8 \approx 1866\text{ rpm}$$

6. **Speed at 125 % of full load,** N_3

$$I_{L3} = 40 \times 1.25 = 50\text{ A}$$
$$I_{a3} = I_{L3} - I_{sh}$$
$$= 50 - 2 = 48\text{ A}$$

Scanned by TapScanner

$$E_{a3} = V_t - (I_{a3}R_a) - \text{voltage drop}$$
$$= 120 - (48 \times 0.2) - 3 = 107.4 \text{ V}$$

7. $$N_3 = \frac{E_{a3}}{E_{a1}} \times N_1$$
$$= \frac{107.4}{109.4} \times 1800 = 1767.09 \approx 1767 \text{ rpm}$$

Que 4.16. **A DC shunt generator delivers 50 kW at 250 V when running at 500 rpm. The armature and field resistances are 0.05 Ω and 125 Ω respectively. Calculate the speed of the same machine and developed torque when running as a shunt motor and taking 50 kW at 250 V.**

AKTU 2016-17(Sem-2), Marks 07

Answer

Given : $R_a = 0.05\ \Omega, R_{sh} = 125\ \Omega$ As generator, $N_g = 500$ rpm, Output power, $P_g = 50$ kW, $V = 250$ V As motor, Input power, $P_m = 50$ kW, $V = 250$ V

To Find : Speed of motor, N_m and Torque developed, τ_d.

1. Shunt field current, $I_{sh} = \frac{V}{R_{sh}} = \frac{250}{125} = 2$ A
2. **As generator :**

   Load current, $I_L = \frac{50 \times 10^3}{250} = 200$ A

   Armature current, $I = I_L + I_{sh} = 200 + 2 = 202$ A

   Generated emf, $E_g = V + I_{ag}R_a = 250 + (202 \times 0.05) = 260.1$ V
3. **As motor :**

   Line current, $I_L = \frac{50 \times 10^3}{250} = 200$ A

   Armature current, $I_{am} = I_L - I_{sh} = 200 - 2 = 198$ A

   Back emf developed, $E_b = V - I_{am}R_a = 250 - (198 \times 0.05) = 240.1$ V

i. **Speed of motor,** $N_m = \frac{E_b}{E_g} N_g = \frac{240.1}{260.1} \times 500 = 461.55$ rpm

ii. **Torque developed,** $\tau_d = \frac{E_b I_{am}}{\frac{2\pi N_m}{60}} = \frac{240.1 \times 198 \times 60}{2 \times \pi \times 461.55} = 983.58$ N-m

Que 4.17. **Give the EMF equation of a DC generator and draw the characteristics of a DC series motor. A 25 kW, 250 V, DC shunt generator has armature and field resistances of 0.06 ohm and 100 ohm respectively. Determine the total armature power developed.**

AKTU 2017-18(Sem-1), Marks 07

Answer

A. **EMF equation of a DC generator :** Refer Q.4.6, Page 4–8D, Unit-4.

B. **Characteristics of DC series motor :** Refer Q. 4.8, Page 4–10D, Unit-4.

C. **Numerical :**

Given : $P = 25$ kW, $R_{sh} = 100\ \Omega, R_a = 0.06\ \Omega, V = 250$ V

To Find : Power developed, P_g.

1. Load current, $I_L = \frac{P}{V} = \frac{25000}{250} = 100$ A
2. Shunt field current, $I_{sh} = \frac{V}{R_{sh}} = \frac{250}{100} = 2.5$ A
3. Armature current, $I_a = I_L + I_{sh} = 100 + 2.5 = 102.5$ A
4. Generated emf, $E_g = V + I_aR_a = 250 + 102.5 \times 0.06 = 256.15$ V
5. Power developed, $P_g = E_g \times I_a = 256.15 \times 102.5$
   $= 26.26$ kW

PART-2

Three Phase Induction Motor : Principle and Construction, Types, Slip-Torque Characteristics, Applications (Numerical Problems Related to Slip only).

CONCEPT OUTLINE : PART-2

- **3-ϕ Induction motors are of two types :**

i. Squirrel-cage induction motor

ii. Wound-rotor or slip-ring induction motor.

- **Slip :** $s = \frac{N_s - N_r}{N_s}$

  and $f_r = sf_s$

Questions-Answers

Long Answer Type and Medium Answer Type Questions

Scanned by TapScanner

Que 4.18. **Give the constructional details about three phase induction motor. Which types of rotors are used in 3ϕ induction motor ?**

Answer

A. Stator :

1. It is a stationary part of the motor. This part is made of silicon steel stampings (*i.e.*, thin sheets). The stampings are slotted.
2. When complete stator is assembled, the slots are formed on the inner side of the stator.
3. The slots may be open type, semi-open type or closed type. In these slots, a 3ϕ winding is accommodated. This winding may be star or delta connected.
4. The three ends of this winding are brought out into the terminal box where 3ϕ AC supply can be connected.
5. The stator windings, stator and the AC supply connected to the stator winding are shown in Fig. 4.18.1.

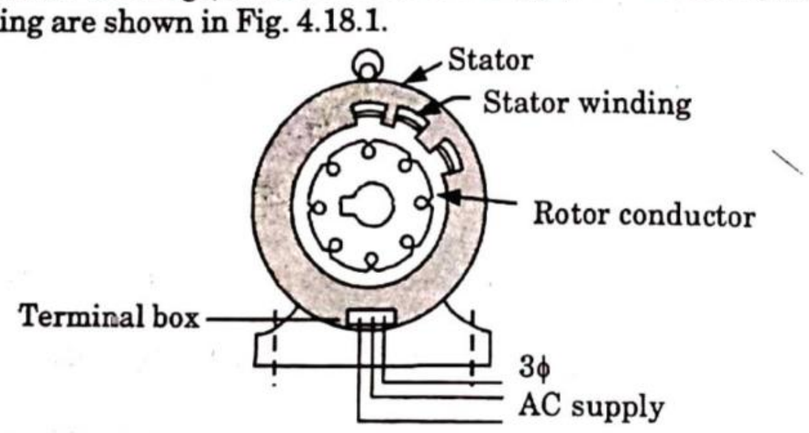

Fig. 4.18.1. Diagram of 3-phase induction motor.

B. Rotor : There are two types of induction motors depending upon the construction of the rotor :

a. Squirrel cage type rotor :

1. This is the simplest and most rugged construction. The rotor consists of a cylindrical laminated core with skewed rotor slots.

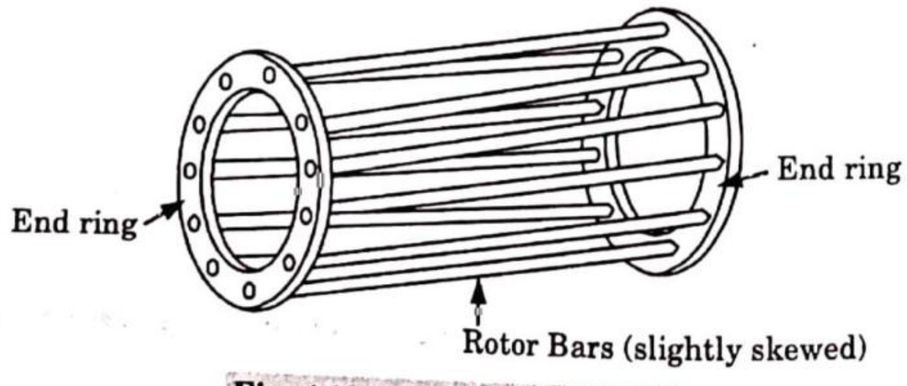

Fig. 4.18.2. Squirrel cage rotor.

2. The rotor conductors which are thick copper bars, are placed in these slots and are brazed or welded to end rings. Thus, the rotor conductors are permanently short-circuited. Therefore it is not possible to add any external resistance in the rotor circuit.

b. Wound type rotor with slip rings :

1. In this type of induction motor, the rotor is wound for the same number of poles as that on the stator.
2. The rotor is made up of laminations with slots on the outer periphery in which a 3ϕ rotor winding is placed.
3. The three phase are starred internally, the remaining three terminals are brought out and connected to the slip-rings mounted on the shaft.
4. The slip-rings are made up of copper or phosphor bronze and there are three brushes resting on them. External connections to additional resistances are done at the brushes.
5. When running under normal conditions, the slip-rings are short-circuited by a metal collar which is pushed along the shaft and the brushes are lifted from the slip-rings to reduce the frictional losses and wear.

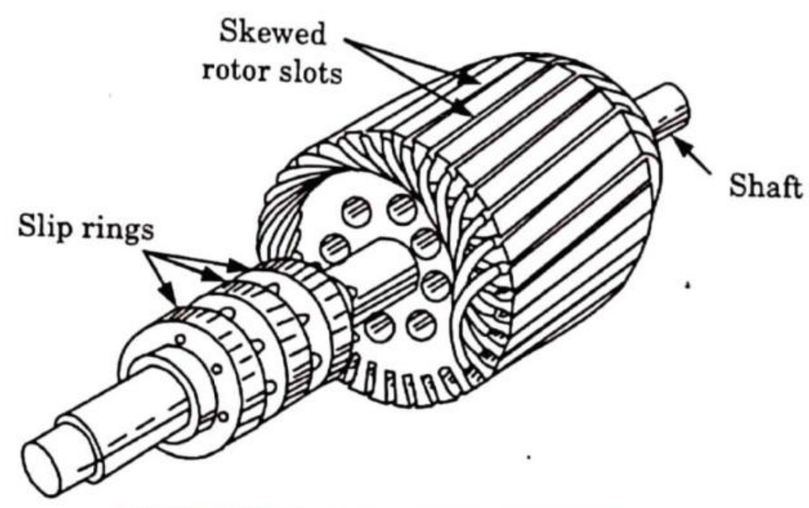

Fig. 4.18.3. Slip-ring type motor's rotor.

Que 4.19. **Explain the principle of operation of a 3-phase induction motor.**

Answer

1. Let us consider that the rotor is stationary and one conductor is on the rotor as shown in Fig. 4.19.1.

Scanned by TapScanner

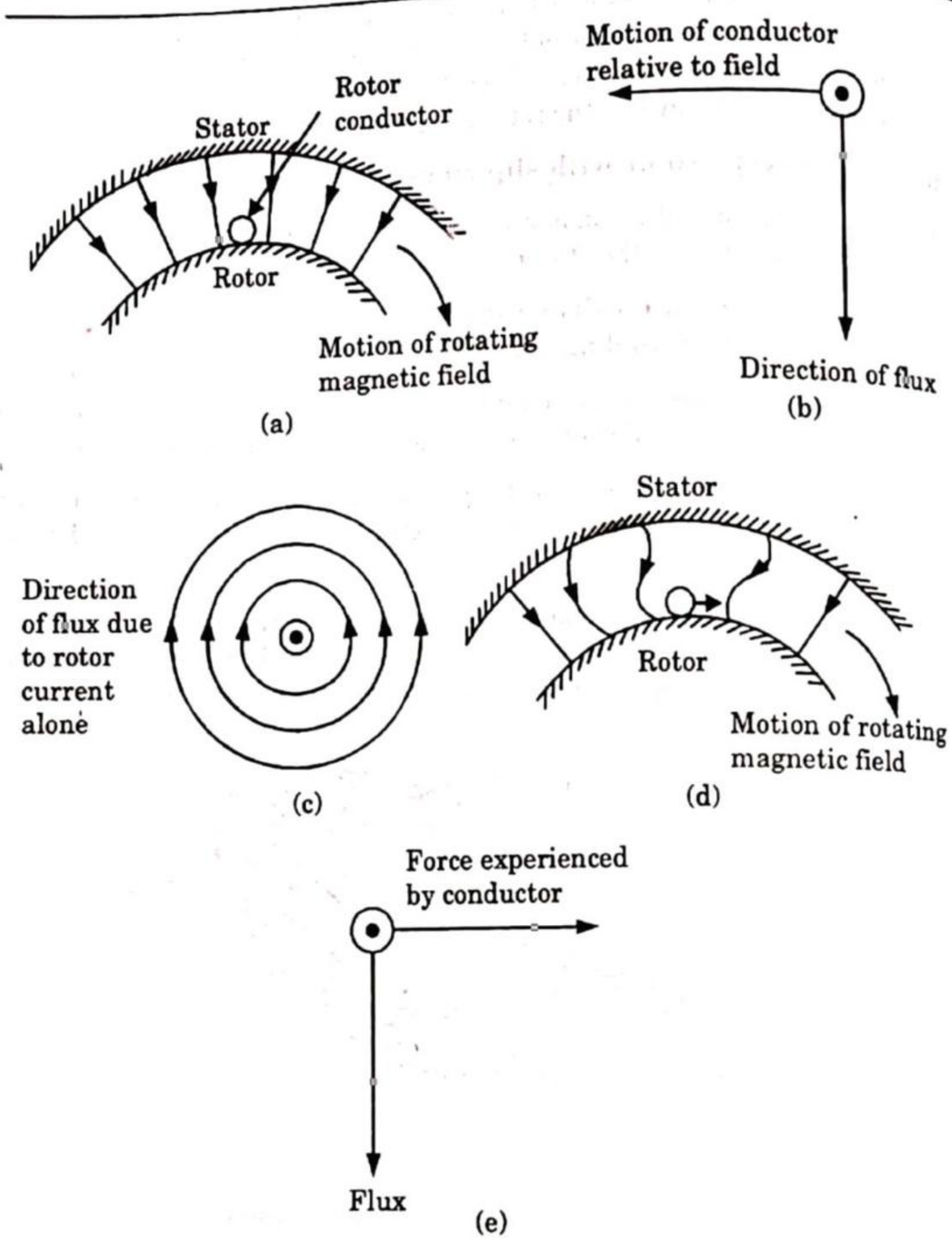

Fig. 4.19.1.

2. Let the rotation of the magnetic field be clockwise.
3. A magnetic field moving clockwise has the same effect as a conductor moving anti-clockwise in a stationary field.
4. By Faraday's law of electromagnetic induction, a voltage will be induced in the conductor. Due to this induced voltage, a current starts to flow in rotor conductor.
5. By right-hand rule the direction of induced current is downward as shown in Fig. 4.19.1(*b*).

6. Now the current in the rotor conductor produces its own magnetic field as shown in Fig. 4.19.1(*c*) due to this a force is produced on the rotor conductor.
7. By the left-hand rule the direction of force can be determined.
8. It is seen that the force acting on the conductor is in the same direction as the direction of the rotating magnetic field.
9. Since the rotor conductor is in a slot on the rotor, and the force acts in a tangential direction to the rotor and torque is developed. Similar torque is produced on all conductors in same direction.
10. Since the rotor is free to move, it starts rotating in the same direction. Thus it is noted that a 3ϕ induction motor is a self-starting motor.

Que 4.20. Derive expression of slip speed, slip, percentage slip and frequency of rotor voltage and current.

Answer

A. Slip speed : The slip speed expresses the speed of the rotor relative to the field.

If N_s = Synchronous speed in rpm

N_r = Actual rotor speed in rpm

Slip speed = $N_s - N_r$ rpm

B. Slip : The slip speed expressed as a fraction of the synchronous speed is called the per-unit slip or fractional slip. The per-unit slip is usually called the slip. It is denoted by *s*.

$$s = \frac{N_s - N_r}{N_s} \text{ per unit (p.u.)}$$

C. Percentage slip :

1. Let n_s = Synchronous speed in rps

n_r = Actual rotor speed in rps

then $$s = \frac{n_s - n_r}{n_s} \text{ p.u.}$$

and percentage slip $= \dfrac{n_s - n_r}{n_s} \times 100$

Also, $$s = \frac{\omega_s - \omega_r}{\omega_s}$$

2. The slip at full load varies from about 5 % for small motors to about 2 % for large motors.

D. Frequency of rotor :

1. The frequency of current and voltage in the stator must be the same as the supply frequency given by

Scanned by TapScanner

$$f = \frac{PN_s}{120} \quad ...(4.20.1)$$

2. The frequency in the rotor windings is variable and depends on the difference between the synchronous speed and the rotor speed. Hence the rotor frequency depends upon the slip. The rotor frequency is given by

$$f_r = \frac{P(N_s - N_r)}{120} \quad ...(4.20.2)$$

3. Division of eq. (4.20.2) by eq. (4.20.1) gives

$$\frac{f_r}{f} = \frac{N_s - N_r}{N_s}$$

$$\therefore \quad f_r = sf$$

Rotor frequency er unit slip × Supply frequency

Que 4.21. Derive the expression for developed torque for a 3ϕ induction motor and obtain the condition for maximum torque.

OR

Explain the working of 3-phase induction motor. What is meant by slip ? Explain slip-torque characteristics of 3-phase induction motor.

AKTU 2015-16(Sem-1), Marks 15

OR

Explain working of 3-phase Induction Motor. Also draw torque-slip characteristics showing operating regions.

AKTU 2013-14(Sem-1), Marks 05

OR

Draw and explain the torque-slip characteristics of a three-phase induction motor.

AKTU 2014-15(Sem-2), Marks 05

Answer

A. Torque of an induction motor :

1. Electrical power generated in rotor

$$= 3E_{2s}I_{2s}\cos\phi_{2s}$$

$$= 3E_{2s}\frac{E_{2s}}{Z_{2s}}\frac{R_2}{Z_{2s}} = \frac{3E_{2s}^2R_2}{Z_{2s}^2} = \frac{3s^2E_{20}^2R_2}{R_2^2 + (sX_{20})^2}$$

2. All this power is dissipated as I^2R loss (copper loss) in the rotor circuit.
3. Input power to rotor $= 2\pi n_s\tau_d$
4. $s \times$ Rotor input = Rotor copper loss

$$s \times 2\pi n_s\tau_d = \frac{3s^2E_{20}^2R_2}{R_2^2 + s^2X_{20}^2}$$

$$\tau_d = \frac{3E_{20}^2}{2\pi n_s}\frac{sR_2}{R_2^2 + s^2X_{20}^2}$$

$$\tau_d = \frac{KsE_{20}^2R_2}{R_2^2 + s^2X_{20}^2} \quad ...(4.21.1)$$

where, $K = \frac{3}{2\pi n_s} = \frac{3}{\omega_s}$ = Constant.

B. Condition for maximum torque :

1. Let $KE_{20}^2 = K_1$ (Constant)

$$\therefore \quad \tau_d = \frac{K_1sR_2}{R_2^2 + s^2X_{20}^2}$$

$$\tau_d = \frac{K_1R_2}{\frac{R_2^2}{s} + sX_{20}^2} = \frac{K_1R_2}{\left(\frac{R_2}{\sqrt{s}} - X_{20}\sqrt{s}\right)^2 + 2R_2X_{20}} \quad ...(4.21.2)$$

2. The developed torque τ_d will be maximum when the right-hand side of eq. (4.21.2) is maximum, which is possible only when

$$\frac{R_2}{\sqrt{s}} - X_{20}\sqrt{s} = 0$$

$$R_2 = sX_{20}$$

$$R_2 = X_{2s}$$

3. Maximum torque is obtained by putting $sX_{20} = R_0$ in eq. (4.21.1).

$$\therefore \quad \tau_{d\max} = \frac{KsR_2E_{20}^2}{R_2^2 + R_2^2} = \frac{KsE_{20}^2}{2R_2} = \frac{KsE_{20}^2}{2sX_{20}} = \frac{KE_{20}^2}{2X_{20}}$$

C. Torque-slip characteristics : The torque-slip characteristics are divided into three regions :

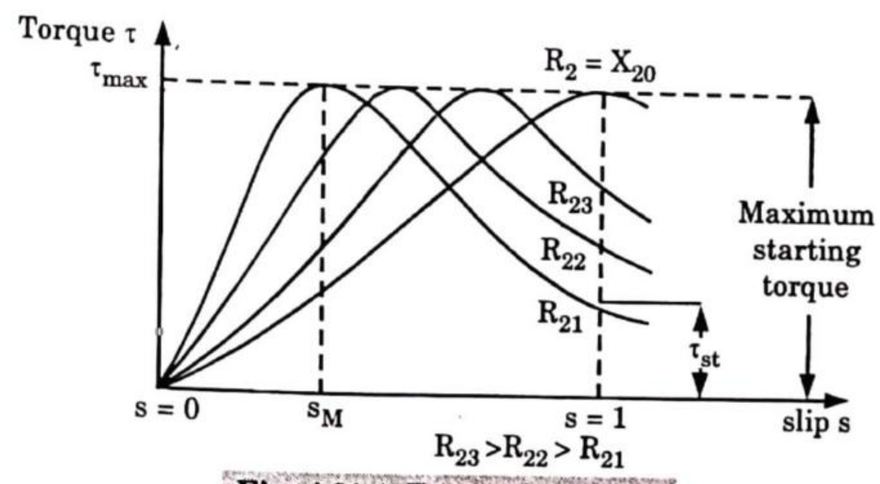

Fig. 4.21.1. Torque-slip curves.

a. **Low-slip region :** At synchronous speed $s = 0$, therefore, the torque is zero. When speed is near to synchronous speed, the slip is very low and $(sX_{20})^2$ is negligible in comparison with R_2. Therefore,

Scanned by TapScanner

$$\tau = \frac{K_1 s}{R_2}$$

If R_2 is constant, $\tau = K_2 s$ $\left(\text{where, } K_2 = \frac{K_1}{R_2}\right)$

Relation shows that torque is proportional to slip. Hence, when slip is small, the torque-slip curve is straight line.

b. **Medium-slip region :** As slip increases, $(sX_{20})^2$ becomes large, so that R_2^2 may be neglected in comparison with $(sX_{20})^2$ and

$$\tau = \frac{K_3 R_2}{sX_{20}^2}$$

$$\therefore \quad \tau \propto \frac{1}{s}$$

The torque-slip characteristic is represented by a rectangular hyperbola.

c. **High-slip region :** The torque decreases beyond the point of maximum torque. The result is that the motor slows down and eventually stops. At this stage, the overload protection must immediately disconnect the motor from the supply to prevent damage due to overheating.

Que 4.22. **Discuss the applications of 3ϕ induction motor.**

Answer

A. **Squirrel cage induction motor :** This motor has the compact, simple and robust construction and is very cheap in cost. It runs almost constant at speed and has medium starting torque and high efficiency.
It is used extensively in industries for :

1. Lathe machine
2. Grinder
3. Compressor
4. Blowers
5. Printing machines
6. Textile mills
7. Wood work lathe
8. Washing machines etc.

B. **Wound rotor (slip-ring induction) motor :** This motor has higher starting torque and it can be further increased by adding external resistance in the rotor circuit. Its speed can be controlled smoothly. But its cost is more and maintenance cost is also higher. It is used in :

1. Electric Locomotives
2. Cranes
3. Hoists
4. Lifts
5. Compressors
6. Winding machines
7. Rolling mills

Que 4.23. **A 3-phase 4 pole induction motor is supplied from 3-phase 50 Hz supply. Calculate :**

i. N_s
ii. **Rotor speed when slip is 4 %**
iii. **Rotor frequency when rotor runs at 600 rpm.**

AKTU 2013-14(Sem-2), Marks 05

Answer

i. $$N_s = \frac{120 f}{P} = \frac{120 \times 50}{4} = 1500 \text{ rpm}$$

ii. $$N = N_s (1 - s) = 1500 (1 - 0.04) = 1440 \text{ rpm}$$

iii. $$\text{Slip at 600 rpm} = \frac{1500 - 600}{1500} = 0.6$$

Rotor frequency, $f_r = s f = 0.6 \times 50 = 30$ Hz

Que 4.24. **A 6.6 kV, 20-poles, 50 Hz, 3-phase star-connected induction motor has rotor resistance of 0.12 Ω and a still reactance of 1.12 Ω. The motor has a speed of 292.5 rpm at full load. Calculate the slip at maximum torque.** **AKTU 2014-15(Sem-1), Marks 10**

Answer

$$s_{\max T} = \frac{\text{Rotor resistance}}{\text{Standstill reactance}}$$

$$= \frac{R_2}{X_2} = \frac{0.12}{1.12} = 0.1071$$

Que 4.25. **Draw torque-slip characteristics of 3 phase induction motor. A 12 pole alternator is coupled to an engine running at 500 rpm. It supplies a 3 phase induction motor having full-load speed at 1440 rpm. Find % slip and number of poles of the motor.**

AKTU 2017-18(Sem-1), Marks 07

Answer

A. **Torque-slip characteristics :** Refer Q. 4.21, Page 4–27D, Unit-4.

B. **Numerical :**

Given : $P_g = 12$; $N_m = 1440$ rpm; $N_g = 500$ rpm
To Find : Slip, s and number of poles of motor, P_m.

1. Frequency of generated emf,

Scanned by TapScanner

$$f = \frac{P_s \times N_s}{120} = \frac{12 \times 500}{120} = 50 \text{ Hz}$$

2. The number of poles even in number and to give a synchronous speed nearest than actual speed of motor that the motor must have is

$$P_m = \frac{120 f}{N_m} = \frac{120 \times 50}{1440} = 4.17 = 4$$

3. Synchronous speed of motor,

$$N_s = \frac{120 f}{P_m} = \frac{120 \times 50}{4} = 1500 \text{ rpm}$$

4. Slip, $$s = \frac{N_s - N_m}{N_s} = \frac{1500 - 1440}{1500} = 0.04 \text{ or } 4\ \%$$

Que 4.26. **A 12-pole, 3-phase alternator is coupled to an engine running at 500 rpm. This alternator supplies an induction motor running at 1450 rpm. Find slip and number of poles of the induction motor.**

AKTU 2017-18(Sem-2), Marks 07

Answer

The procedure is same as Q. 4.25, Page 4–30D, Unit-4.

(Ans. $P_m = 4$; $s = 3.33\ \%$)

Que 4.27. **The induced emf between the slip-ring terminals of 3-phase induction motor, when the rotor is stand still is 100 V. The rotor windings are star connected and have resistance and stand still reactance of 0.05 W and 0.1 W per phase respectively. Calculate the rotor current and phase difference between rotor voltage and current at 4 % slip.**

AKTU 2016-17(Sem-1), Marks 07

Answer

Given : $E_2 = \frac{100}{\sqrt{3}}$ V, $R_2 = 0.05\ \Omega$, $X_2 = 0.1\ \Omega$, $s = 4\% = 0.04$

To Find : I_2 and phase difference between V and I.

i. **Rotor current :** $$I_2 = \frac{sE_2}{\sqrt{R_2^2 + (sX_2)^2}} = \frac{0.04 \times \frac{100}{\sqrt{3}}}{\sqrt{(0.05)^2 + (0.04 \times 0.1)^2}}$$

$$= 46.04 \text{ A}$$

ii. **Phase difference between V and I :**

$$\cos\phi = \frac{R_2}{Z_2} = \frac{0.05}{\sqrt{(0.05)^2 + [0.04 \times 0.1]^2}}$$

$$\cos\phi = 0.9968$$

$$\phi = \cos^{-1} 0.9968$$

$$= 4.574°$$

PART-3

Single Phase Induction Motor : Principle of Operation and Introduction to Methods of Starting, Applications.

CONCEPT OUTLINE : PART-3

- **Single-phase induction motor :**

1. A 1ϕ motor consists of a single-phase winding mounted on the stator and a cage winding on the rotor.
2. When a 1ϕ supply is connected to the stator winding a pulsating magnetic field is produced. By pulsating field we mean that the field builds up in one direction, falls to zero, and then builds up in the opposite direction.
3. Under these conditions, the rotor does not rotate due to inertia. Therefore, a 1ϕ induction motor is inherently not self-starting.

Questions-Answers

Long Answer Type and Medium Answer Type Questions

Que 4.28. **Using double-revolving field theory, explain the principle of operation of a single-phase induction motor.**

OR

Why single phase induction motor is not a self-starting machine ? Explain it.

AKTU 2014-15(Sem-2), Marks 05

Answer

A. **Double-revolving field theory :**

1. It states that a stationary pulsating magnetic field can be resolved into two rotating magnetic fields, each of equal magnitude but rotating in opposite directions.

Scanned by TapScanner

2. The induction motor responds to each magnetic field separately, and the net torque in the motor is equal to the sum of the torques due to each of the two magnetic fields.
3. The equation for an alternating magnetic field whose axis is fixed in space is given by

$$b(\alpha) = \beta_{max} \sin \omega t \cos \alpha \quad ...(4.28.1)$$

where β_{max} is the maximum value of the sinusoidally distributed air-gap flux density produced by a properly distributed stator winding carrying an alternating current of frequency ω and α is space-displacement angle measured from the axis of the stator winding.

4. Since $\sin A \cos B = \frac{1}{2} \sin (A - B) + \frac{1}{2} \sin (A + B)$,

eq. (4.28.1) can be written as

$$b(\alpha) = \frac{1}{2} \beta_{max} \sin (\omega t - \alpha) + \frac{1}{2} \beta_{max} \sin (\omega t + \alpha) \quad ...(4.28.2)$$

5. The first term on the right-hand side of eq. (4.28.2) represents the equation of a revolving field moving in the positive α direction. It has a maximum value equal to $\frac{1}{2} \beta_{max}$.
6. The second term on the right-hand side of eq. (4.28.2) represents the equation of a revolving field moving in the negative α direction. Its amplitude is also equal to $\frac{1}{2} \beta_{max}$.
7. The field moving in the positive α direction is called the forward rotating field. The field moving in the negative α direction is called the backward rotating field.
8. It is to be noted that both the fields rotate at synchronous speed $\omega_s (= 2\pi f)$ in opposite directions.
9. Thus, $\frac{1}{2} \beta_{max} \sin (\omega t - \alpha)$ is the forward field

and $\frac{1}{2} \beta_{max} \sin (\omega t - \alpha)$ is the backward field.

B. Reason (1 ϕ induction motor is not a self-starting machine) :

1. A 1ϕ motor consists of a single-phase winding mounted on the stator and a cage winding on the rotor.
2. When a 1ϕ supply is connected to the stator winding a pulsating magnetic field is produced. By pulsating field we mean that the field builds up in one direction, falls to zero, and then builds up in the opposite direction.
3. Under these conditions, the rotor does not rotate due to inertia. Therefore, a 1ϕ induction motor is inherently not self-starting.

Que 4.29. Describe construction and working of a shaded-pole motor.

Answer

A. Shaded-pole motor :

1. A shaded-pole motor is a simple type of self-starting 1ϕ induction motor. It consists of a stator and a cage-type rotor.
2. The stator is made up of salient poles. Each pole is slotted on side and a copper ring is fitted on the smaller part *a*. This part is called shaded pole. The ring is usually a single-turn coil and is known as shading coil.
3. When alternating current flows in the field winding, an alternating flux is produced in the field core. A portion of this flux links with shading coil, which behaves as a short-circuited secondary of transformer.
4. A voltage is induced in the shading coil and this voltage circulates a current in it. The induced current produces a flux which opposes the main core flux.
5. The shading coil, thus, causes the flux in the shaded portion to lag behind the flux in the unshaded portion of the pole.
6. At the same time, the main flux and the shaded pole flux are displaced in space. This space displacement is less than 90°.

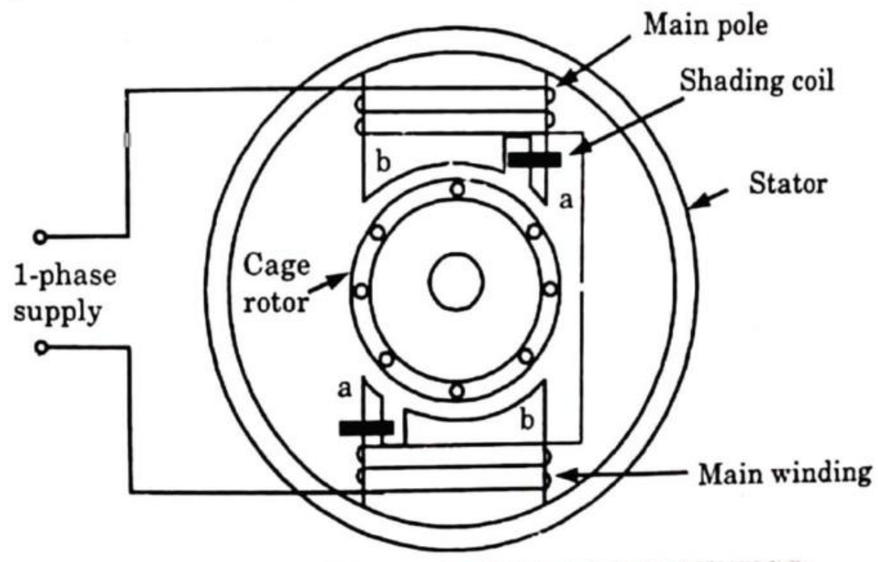

Fig. 4.29.1. Shaded-pole motor with two stator poles.

7. Since, there is time and space displacement between the two fluxes, conditions for setting up a rotating magnetic field are produced.
8. Under the action of the rotating flux a starting torque is developed on cage rotor. The direction of this rotating field (flux) is from the unshaded to shaded portion of the pole.
9. In a shaded-pole motor the reversal of direction of rotation is not possible.

Scanned by TapScanner

B. Applications :

1. The most common applications are table fans, exhaust fans, hair driers, fans for refrigeration and air-conditioning equipments, electronic equipment, cooling fans etc.
2. They are also used in record players, tape recorders, slide projectors, photo copying machines, in starting electric clocks and other single-phase synchronous timing motors.

Que 4.30. **Using double revolving field theory explain why single phase induction motor is not self starting ? Describe capacitor-start capacitor-run method for starting single phase induction motor and give two applications of such motor.**

AKTU 2015-16(Sem-2), Marks 15

Answer

A. Double revolving field theory : Refer Q. 4.28, Page 4–32D, Unit-4.

B. Capacitor-start capacitor-run motor or two value capacitor motor :

1. Fig. 4.30.1 shows the schematic diagram of a two-value capacitor motor.
2. It has a cage rotor and its stator has two windings namely the main winding and the auxiliary winding.
3. The two windings are displaced 90° in space. The motor uses two capacitors C_S and C_R. The two capacitors are connected in parallel at starting.
4. The capacitor C_S is called the starting capacitor.

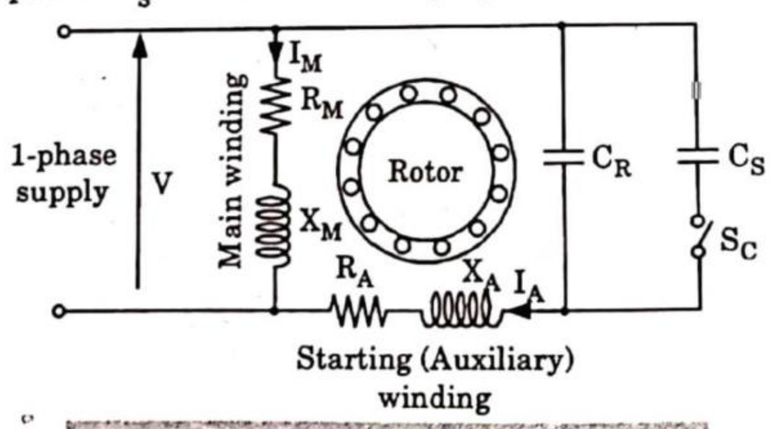

Fig. 4.30.1. Two-value capacitor motor or capacitor-start capacitor-run motor.

5. In order to obtain a high starting torque, a large current is required. For this purpose, the capacitive reactance X_A in the starting winding should be low. Since $X_A = 1/(2\pi f C_A)$, the value of C_s should be large.
6. During normal operation, the rated line current is smaller than the starting current. Hence the capacitive reactance should be large. Since $X_R = 1/(2\pi f C_R)$, the value of C_R should be small.

7. As the motor approaches synchronous speed, the capacitor C_s is disconnected by a centrifugal switch S_C. The capacitor C_R is permanently connected in the circuit. It is called the run-capacitor.
8. Since one capacitor C_S is used only at starting and the other C_R for continuous running, this motor is also called capacitor-start capacitor-run motor.

C. Applications : These are used for loads of higher inertia requiring frequent starts where the maximum pull-out torque and efficiency required. They are used in pumping equipment, refrigeration, air compressors etc.

Que 4.31. **Single-phase induction motor is not self-starting. Explain. Name various starting methods of single-phase induction motor and explain capacitor run motor.**

AKTU 2016-17(Sem-2), Marks 07

OR

Explain any one method of starting single-phase induction motor with neat diagram.

AKTU 2013-14(Sem-1), Marks 05

OR

Explain principle of operation of 1ϕ induction motor using two revolving field theory. List various methods of starting.

AKTU 2017-18(Sem-2), Marks 07

Answer

A. 1 ϕ I.M. is not self starting : Refer Q. 4.28, Page 4–32D, Unit-4.

B. Principle of operation of 1ϕ induction motor : Refer Q. 4.28, Page 4–32D, Unit-4.

C. Starting methods of 1ϕ induction motor (or Types of 1ϕ induction motor) :

a. Split-phase motor :

1. Fig. 4.31.1 shows a split-phase induction motor. It is also called a resistance-start motor.

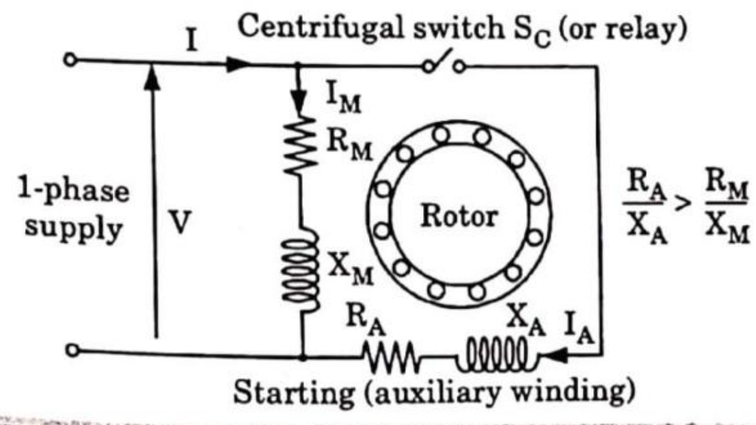

Fig. 4.31.1. Split-phase induction motor connections.

Scanned by TapScanner

2. It has a single-cage rotor and its stator has two windings - a main winding and a starting (auxiliary) winding.
3. The main field winding and the starting winding are displaced 90° in space. The main winding has very low resistance and high inductive reactance.
4. Thus, the current I_M in the main winding lags behind the supply voltage V by nearly 90°.
5. The auxiliary winding has a resistor connected in series with it. It has a high resistance and low inductive reactance so that the current I_A in the auxiliary winding is nearly in phase with the line voltage.
6. Thus, there is time phase difference between the currents in the two windings. This phase difference is enough to produce a rotating magnetic field.

b. Capacitor-start motor :

1. Fig. 4.31.2 shows the connections of a capacitor-start motor. It has a cage rotor and its stator has two windings namely, the main winding and the auxiliary winding (starting winding).
2. The two windings are displaced 90° in space. A capacitor C_S is connected in series with the starting winding. A centrifugal switch S_C is also connected as shown in Fig. 4.31.2.
3. By choosing a capacitor of the proper rating the current I_M in the main winding may be made to lag the current I_A in the auxiliary winding by 90°.
4. Thus, a single-phase supply current is split into two phases to be applied to the stator windings. Thus the windings are displaced 90° apart in time phase.
5. Therefore the motor acts like a balanced two-phase motor. As the motor approaches its rated speed, the auxiliary winding and the starting capacitor C_S are disconnected automatically by the centrifugal switch S_C mounted on the shaft.

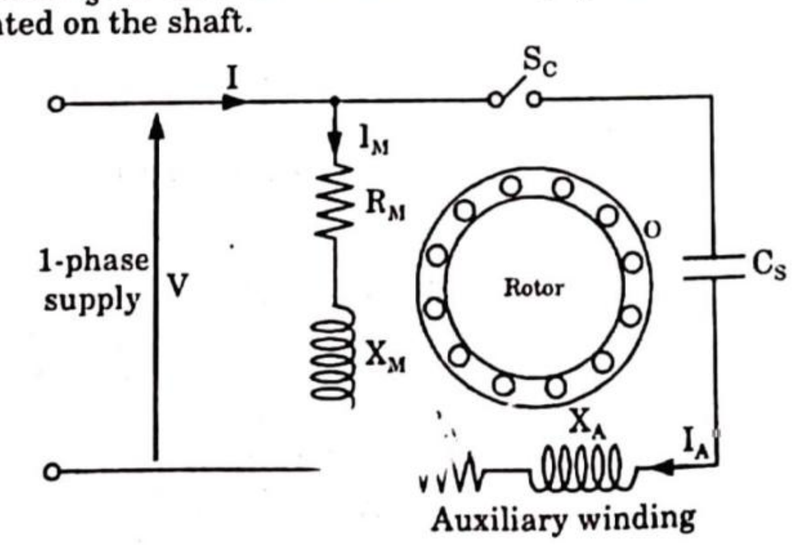

Fig. 4.31.2. Capacitor start motor.

c. Permanent capacitor-run motor :

1. A permanent-split capacitor (PSC) motor is shown in Fig. 4.31.3.
2. It has a cage rotor and its stator has two windings, namely, the main winding and the auxiliary winding.
3. This single-phase induction motor has only one capacitor C which is connected in series with the starting winding.
4. The capacitor C is permanently connected in the circuit both at starting and running conditions.

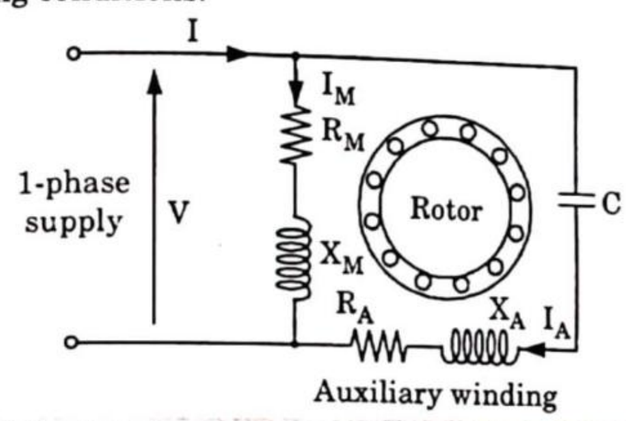

Fig. 4.31.3. Permanent-split capacitor motor.

5. A permanent-split capacitor motor is also called the single-value capacitor motor.
6. Since the capacitor C is always in the circuit, this type of motor has no starting switch.
7. The auxiliary winding is always in the circuit, and therefore this motor operates in the same way as a balanced two-phase motor.

d. Two value capacitor motor : Refer Q. 4.30, Page 4–35D, Unit-4.

e. Shaded-pole motor : Refer Q. 4.29, Page 4–34D, Unit-4.

PART-4

Three Phase Synchronous Machines : Principle of Operation of Alternator and Synchronous Motor and their Applications.

CONCEPT OUTLINE : PART-4

- Synchronous machine is an AC machine in which the rotor moves at a speed which bears a constant relationship to the frequency of currents in the armature winding.
- Synchronous machine provides constant speed industrial drives with possibility of low power factor correction.

Questions-Answers

Long Answer Type and Medium Answer Type Questions

Scanned by TapScanner

Que 4.32. **Explain the principle of operation of an Alternator.**

AKTU 2014-15(Sem-2), Marks 05

Answer

1. Alternator means 3ϕ AC generator. Alternators operate on the electromagnetic induction principle, similar to DC generators.
2. 3ϕ windings are located at the hollow cylindrical stationary part known as stator and field system is rotated by prime mover.

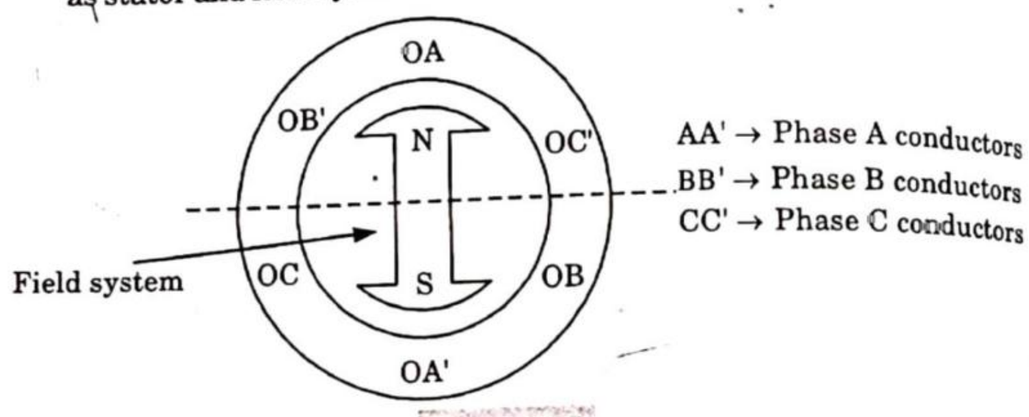

Fig. 4.32.1.

3. When the field system is rotated by a prime mover, the stator conductors are cut by magnetic flux and hence an emf is induced in the stator conductors which is given by

$$e = B\,l\,v$$

where, B = Flux density in Wb/m^2 or T

l = Length of stator conductors in meters

v = Speed of the conductor in m/s

4. Since induced emf e is directly proportional to flux density (if l and v is made constant, the emf wave will be identical to the flux density wave). If the flux density produced by the field winding is sinusoidal the emf induced in phase coils will be sinusoidal as shown in Fig. 4.32.2.

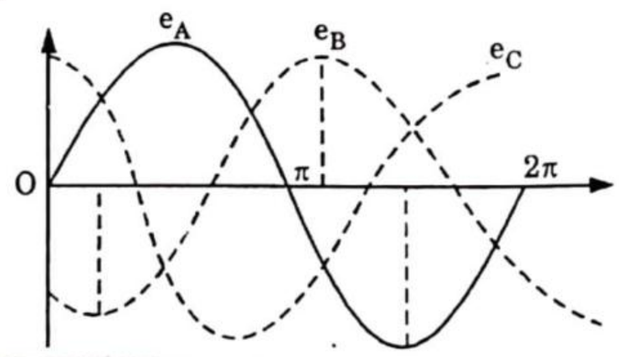

Fig. 4.32.2. Voltage wave shapes of 3ϕ alternator.

5. The frequency of the generated emf depends upon the number of poles P and the speed N at which the alternator is being run by prime mover, as $f = \frac{PN}{120}$ Hz.

Que 4.33. **Discuss principle of operation of synchronous motor with diagram. Draw characteristics of DC series motor.**

AKTU 2013-14(Sem-1), Marks 10

OR

Illustrate the operating principle of synchronous motor with suitable figures.

AKTU 2014-15(Sem-1), Marks 10

OR

Explain working principle of synchronous motor and two applications.

AKTU 2014-15(Sem-2), Marks 05

OR

Explain :

a. **Explain the speed-torque characteristics of DC shunt and series motors.**
b. **Explain why a synchronous motor does not develop starting torque ?**
c. **Explain the working principle of three phase induction motor.**

AKTU 2016-17(Sem-1), Marks 07

OR

Explain principle of operation of 3-phase synchronous motor.

AKTU 2017-18(Sem-2), Marks 07

Answer

A. Principle of working of synchronous motor :

1. When the synchronous machine stator is supplied with three-phase balanced voltages and the rotor field is excited with DC current, then in the air gap there will be an mmf (magneto motive force) which is sinusoidally distributed and rotate at synchronous speed defined by the frequency of the applied voltage.
2. The rotor field is also sinusoidally distributed in the air gap due to the shaping of the poles and is stationary with respect to rotor. If the rotor is rotated at synchronous speed, then the rotor field also rotates at the same speed.
3. The interaction of stator mmf and the rotor flux generates unidirectional torque in the direction of motion of rotor. This is the principle of working

Scanned by TapScanner

of synchronous motor. The motor runs at constant speed defined by the stator frequency.

B. 2-pole synchronous motor :

1. Consider a 2-pole synchronous motor. When a 3-phase AC voltage is applied to the stator winding, a rotating magnetic field is produced in the air gap. The stator field rotates at synchronous speed.

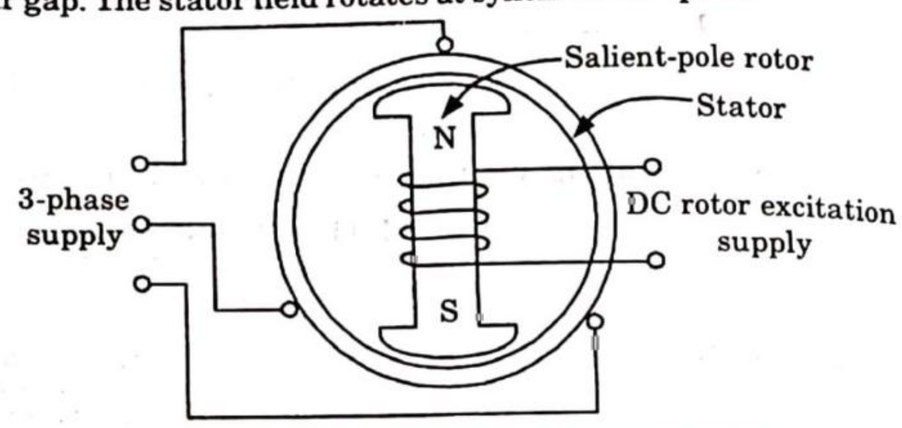

Fig. 3.33.1. A 2-pole synchronous motor.

2. The field current of the motor produces a steady-state magnetic field.
3. Therefore, there are two magnetic fields present in the machine. The rotor will tend to align with the stator field.
4. Since, the stator magnetic field is rotating, the rotor magnetic field and the rotor will tend to rotate with the rotating field of the stator.
5. In order to develop a continuous torque, the two fields must be stationary with respect to each other.
6. This is possible only when the rotor also rotates at synchronous speed.
7. Let us assume that the rotor is stationary. When a pair of rotating stator poles sweeps across the stationary rotor poles at synchronous speed, the stator poles will tend to rotate the rotor in one direction and then in the other direction.
8. However, because of the rotor inertia, the stator field slides by so fast that the rotor cannot follow it.
9. Consequently, the rotor does not move and we can say that the starting torque is zero. Hence, a synchronous motor is not self-starting.

C. Applications :

1. They are used in power house and substations in parallel to the bus bar to improve the power factor. For this purpose, they are run without mechanical load and over-excited.
2. In factories having a large number of induction motors or other power apparatus operating at lagging power, they are employed to improve power factor.
3. Such motors are also used to regulate the voltage at the end of transmission lines.

D. Speed torque characteristic of DC shunt motor : Refer Q. 4.9, Page 4–12D, Unit-4.

E. Speed torque characteristic of DC series motor : Refer Q. 4.8, Page 4–10D, Unit-4.

F. Working principle of three phase induction motor :
Refer Q. 4.19, Page 4–24D, Unit-4.

Que 4.34. **Why a three phase synchronous motor is not self starting? Discuss use of damper winding for starting a synchronous motor.**

AKTU 2015-16(Sem-2), Marks 7.5

OR

Explain starting methods of synchronous motor.

Answer

A. Three phase synchronous motor is not self starting :
Refer Q. 4.33, Page 4–40D, Unit-4.

B. Starting methods of synchronous motor :

i. Motor starting with an external prime mover :

1. In this method an external motor drives the synchronous motor and brings it to synchronous speed.
2. The synchronous machine is then synchronised with the bus-bar as a synchronous generator. The prime mover is then disconnected.
3. Once in parallel, the synchronous machine will work as a motor.
4. Now the load can be connected to the synchronous motor. Since load is not connected to the synchronous motor before synchronising, the starting motor has to overcome the inertia of the synchronous motor at no load.
5. Therefore the rating of the starting motor is much smaller than the rating of the synchronous motor.
6. At present most of large synchronous motors are provided with brushless excitation systems mounted on their shafts. These exciters are used as starting motors.

ii. Motor starting with damper windings :

1. A damper winding consists of heavy copper bars inserted in slots of the pole faces of the rotor.
2. These bars are short-circuited by end rings at both ends of the rotor. Thus, these short-circuited bars form a squirrel-cage winding.
3. When a three-phase supply is connected to the stator, the synchronous motor with damper winding will start as a three-phase induction motor.
4. As the motor approaches synchronous speed, the DC excitation is applied to the field windings.
5. At a particular instant motor gets pulled into synchronism and starts rotating at a synchronous speed. As rotor rotates at synchronous speed, the relative motion between damper winding and rotating magnetic field is zero.

Que 4.35. **Why is the synchronous motor not self starting ? Explain the advantages and disadvantages along with applications of synchronous motor.**

AKTU 2015-16(Sem-1), Marks 10

Scanned by TapScanner

Answer

A. Synchronous motor is not self starting : Refer Q. 4.33, Page 4–40D, Unit-4.

B. Application of synchronous motor : Refer Q. 4.33, Page 4–40D, Unit-4.

C. Advantages of synchronous motor :

1. Constant speed operation.
2. Higher efficiency, especially in the low speed unity power factor range.
3. Capability of being operated under a wide range of power factor both lagging and leading.

D. Disadvantages of synchronous motor :

1. Cost per kW output is higher than that of induction motor.
2. It requires DC excitation which must be supplied from external source.
3. It has a tendency to hunt.
4. It cannot be started under load. Its starting torque is zero.
5. Collector rings and brushes are required.

Que 4.36. **Write a short note on synchronous condenser.**

AKTU 2013-14(Sem-2), Marks 05

Answer

1. Synchronous condenser is also known as synchronous compensator or synchronous phase modifier.
2. A synchronous condenser is a synchronous motor running without a mechanical load. It can generate or absorb reactive volt-ampere (VAR) by varying the excitation of its field winding.
3. It can be made to take a leading current with over-excitation of its field winding. In such a case it delivers inductive or absorbs capacitive Volt-ampere reactive.
4. If it is in under excited condition, it draws the lagging current and, therefore, supplies capacitive or absorbs inductive volt-ampere reactive. Thus, a current drawn by a synchronous capacitor or condenser can be varied from lagging to leading smoothly by varying its excitation.
5. When the motor power factor is unity, the DC excitation is said to be normal. Over-excitation causes the motor to operate at a leading power factor.
6. Under excitation causes it to operate at a lagging power factor. When the motor is operated at no load with over-excitation, it takes a current that leads the voltage by nearly 90 degrees.
7. Thus, it behaves like a capacitor and under such operating conditions, the synchronous motor is called a synchronous capacitor.
8. Since a synchronous condenser behaves like a variable inductor or a variable capacitor, it is used in power transmission systems to regulate line voltage.

☺☺☺

5 UNIT

Electrical Installation

Part-1 ..... **(5–2D to 5–7D)**

- *Components of LT Switchgear : Switch Fuse Unit (SFU)*
- *MCB*
- *ELCB*
- *MCCB*

A. Concept Outline : Part-1 ..... 5–2D
B. Long and Medium Answer Type Questions 5–2D

Part-2 ..... **(5–7D to 5–13D)**

- *Types of Wires and Cables*
- *Importance of Earthing*

A. Concept Outline : Part-2 ..... 5–7D
B. Long and Medium Answer Type Questions 5–7D

Part-3 ..... **(5–13D to 5–19D)**

- *Types of Batteries*
- *Important Characteristics for Batteries*
- *Elementary Calculations for Energy Consumption and Savings*
- *Battery Backup*

A. Concept Outline : Part-3 ..... 5–14D
B. Long and Medium Answer Type Questions 5–14D

Scanned by TapScanner

PART-1

Components of LT Switchgear : Switch Fuse Unit (SFU), MCB, ELCB, MCCB.

CONCEPT OUTLINE : PART-1

- Electrical circuit breaker is a kind of switching device which can be activated automatically as well as manually to control and protect an electrical power system respectively.
- MCB is an electromechanical device which guards an electrical circuit from an over current.
- The MCCB is used to control electric energy in distribution.
- The ELCB is us[illegible] protect the circuit from the electrical leakage.
- A RCCB is curren[illegible] sensing equipment used to guard a low voltage circuit from the fault.

Questions-Answers

Long Answer Type and Medium Answer Type Questions

Que 5.1. **Write a short note on switch fuse element (SFU).**

Answer

1. SFU means Switched Fuse Unit. It has one switch unit and one fuse unit.
2. When we operate the breaker, the contacts will get close through switch and then the supply will pass through the fuse unit to the output.
3. Whereas in Fuse Switch Unit there is no separate switch and fuse unit. There is only fuse unit which act itself as a switch. When we operate, the fuse unit will close the input and output of the breaker.
4. SFU has been used to trip the circuit, particularly for high capacity tripping.

Que 5.2. **Discuss construction and working principle of MCB (Miniature Circuit Breaker).**

Answer

A. **MCB :** Miniature circuit breakers known as MCBs, are mechanically operated switches cum electro-mechanically operated automatic circuit protection devices. They are used to interrupt a circuit during overload and short circuits.

B. **Construction of MCB :**

1. **External casing :** External casing holds all the internal components firm and protects them from dust. It is made of insulating materials such as plastic or ceramics etc.
2. **Contacts :** A pair of contacts can be found inside an MCB. One of them is fixed and other is movable.
3. **Knob :** MCBs can be turned ON and OFF using this knob.
4. **Latch :** A latch arrangement is made inside MCBs to hold the contacts under spring tension at ON position.
5. **Bimetallic strip :** Bimetallic strip offers delayed overload protection by sensing prolonged flow of current greater than its rated current.
6. **Solenoid :** Solenoid offers instantaneous protection against short circuit by releasing the mechanical latch

C. **Working principle of MCBs :**

1. In the case of overloads, a current more than the rated current is driven through the MCB. As the current flows through the bimetallic strip, it gets heated up and deflects by bending and releases the mechanical latch.

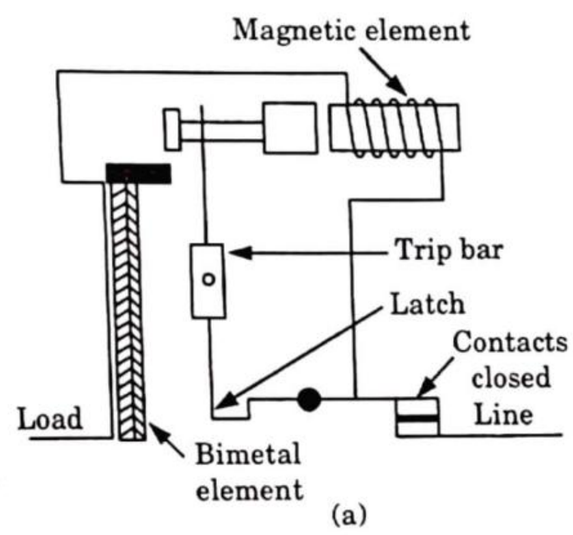

(a)

Scanned by TapScanner

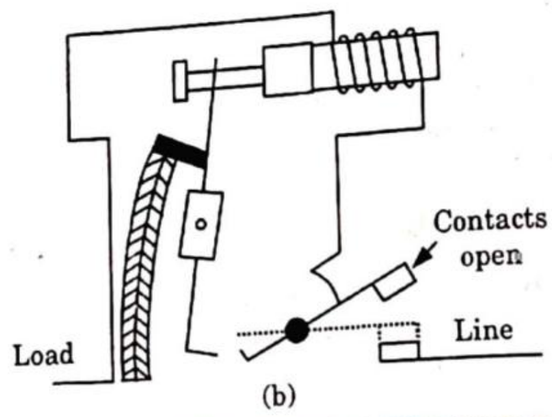

Fig. 5.2.1. Magnetic circuit breaker trip latch operation : (a) normal; (b) overcurrent condition.

2. Deflection time of bimetallic strip depends on the amount of current flowing through the strip. Higher the current faster will be the deflection of bimetallic stip.
3. During short circuits, a transient current flowing through the solenoid forces the plunger towards the latch. This action instantaneously releases the mechanical latch and opens the contacts immediately.

Que 5.3. **What are the functions of MCB ? Also give its applications and advantages over fuses.**

Answer

A. Functions :

1. **Switching :** Miniature circuit breakers can be switched ON and OFF manually.
2. **Overcurrent protection :** When an equipment is overloaded it draws more current from the source. This current flows through the bimetallic strip and heats it up. Bimetallic strip that deforms on heating will knock down the latch, thereby opening the contact and isolate the equipment from the supply.

B. Applications : MCBs are used in the protection of lights, refrigerators, air conditioners etc. as an alternative for fuses.

C. Advantages of MCBs over fuses :

1. It can act faster than fuses during short circuits.
2. MCBs can offer better overload protection than fuses.
3. MCBs can be reset after the clearance of fault. But fuses needs to be rewired or replaced.
4. Safer interruption of short circuit current and arc quenching.
5. Knob makes operation of MCBs much easier than a fuse.

6. MCBs can be turned off whenever we want. Therefore, Circuit isolation during maintenance is much easier compared to fuses.

Que 5.4. **Discuss working principle of different types of ELCB (Earth leakage circuit breaker).**

Answer

A. ELCB : An earth leakage circuit breaker (ELCB) detects the earth leakage current and makes the power supply OFF by opening the associated circuit breaker.

B. Types of earth leakage circuit breaker :

i. Voltage earth leakage circuit breaker :

1. In this breaker, one terminal of the relay coil is connected to the metal body of the equipment to be protected against earth leakage and other terminal is connected to the earth directly.
2. If any insulation failure occurs or live phase wire touches the metal body, of the equipment, there must be a voltage difference appears across the terminal of the coil connected to the equipment body and earth. This voltage difference produces a current to flow through the relay coil.

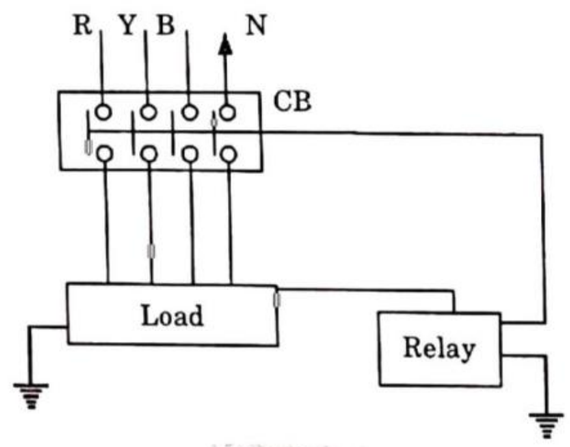

Fig. 5.4.1.

3. If the voltage difference crosses a predetermined limit, the current through the relay becomes sufficient to actuate the relay for tripping the associated circuit breaker to disconnect the power supply to the equipment.

ii. Current ELCB or RCCB (Residual Current Circuit Breaker) :

1. Here one CT core is energized from both phase wire and neutral wire.
2. In this, the polarity of the phase winding and neutral winding on the core is so chosen that, in normal condition, mmf of one winding opposes that of another.
3. In normal operating conditions the current goes through the phase wire will be returned via neutral wire if there is no leakage in between.

Scanned by TapScanner

4. As both currents are same, the resultant mmf produced by these two currents is also zero-ideally.
5. The relay coil is connected with another third winding wound on the CT core as secondary. The terminals of this winding are connected to a relay system.
6. In normal operating condition there would not be any current circulating in the third winding as here is no flux in the core due to equal phase and neutral current.
7. When any earth leakage occurs in the equipment, there may be part of phase current passes to the earth, through the leakage path instead of returning via metal wire.
8. Hence the magnitude of the neutral current passing through the RCCB is not equal to phase current passing through it.

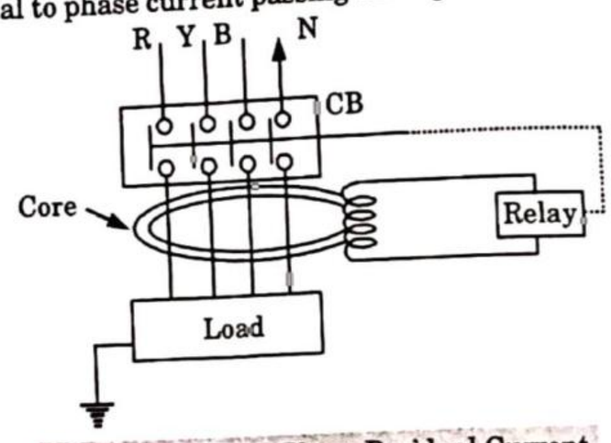

Fig. 5.4.2. Three Phase Residual Current Circuit Breaker or Current ELCB.

9. When this difference crosses a predetermined value, the current in the third secondary winding of the core becomes sufficiently high to actuate the electromagnetic relay attached to it.
10. This relay causes tripping of the associated circuit breaker to disconnect the power supply to the equipment under protection.

Que 5.5. **Write a short note on moulded case circuit breaker (MCCB).**

Answer

A. MCCB :

1. Moulded Case Circuit Breakers (MCCB) are electromechanical devices which protect a circuit from overcurrent and short circuit.
2. They provide overcurrent and short circuit protection for circuits ranging from 63 amps up to 3000 amps.
3. Their primary functions are to provide a means to manually open a circuit and automatically open a circuit under overload or short circuit conditions. The overcurrent, in an electrical circuit, may result from short circuit, overload or faulty design.

4. MCCB is an alternative to a fuse since it does not require replacement once an overload is detected. Unlike fuse, an MCCB can be easily reset after a fault and offers improved operational safety and convenience without incurring operating cost.

B. Characteristics of MCCB :

1. The range of rated current is up to 1000 amperes.
2. Trip current may be adjusted.
3. Thermal magnetic operation.

PART-2

Types of Wires and Cables, Importance of Earthing.

CONCEPT OUTLINE : PART-2

- Electrical wire is used to carry electrical current from the power source to the end user device.
- A cable is an assembly of two or more electrical conductor, usually held together with an overall sheath. The assembly is used for transmission of electrical power.

Questions-Answers

Long Answer Type and Medium Answer Type Questions

Que 5.6. **Discuss different types of wires.**

Answer

A. Electrical wire : Electrical wire is used to carry electrical current from the power source to the end user device.

B. Types of wire :

1. Triplex wires :

i. Triplex wires are usually used in single-phase service drop conductors, between the power pole and weather heads.

ii. They are composed of two insulated aluminium wires wrapped with a third bare wire which is used as a common neutral. The neutral is usually of a smaller gauge and grounded at both the electric meter and the transformer.

2. Main feeder wires : Main power feeder wires are the wires that connect the service weather head to the house. They are made with stranded or solid THHN (T = Thermoplastic Insulation, HH = High heat resistance, N = Nylon coating) wire.

Scanned by TapScanner

3. **Panel feed wires :** Panel feed cables are generally black insulated THHN wire. These are used to power the main junction box and the circuit breaker panels.

4. **Non-metallic sheathed wires :**

i. Non-metallic sheath wire is used in homes and has 2-3 conductors, each with plastic insulation, and a bare ground wire.

ii. The individual wires are covered with another layer of non-metallic sheathing. Since it is relatively cheaper and available in ratings for 15, 20 and 25 amps, this type is preferred for in-house wiring.

5. **Single strand wires :** Single strand wire also uses THHN wire, though there are other variants. Each wire is separate and multiple wires can be drawn together through a pipe easily.

Que 5.7. **Discuss general construction of cable.**

Answer

The Fig. 5.7.1 shows the general construction of a cable. Its various parts are :

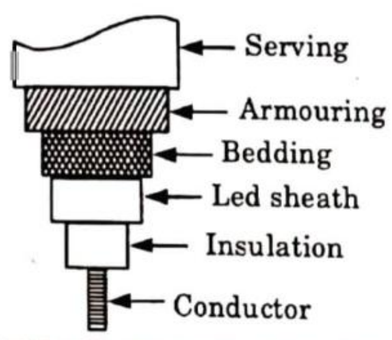

Fig. 5.7.1. Construction of a cable.

Various parts of cable :

1. **Conductor or core :**

i. This section consists of single conductor or more than one conductor. The conductors are also called cores. A cable with three conductors is called three core cable.

ii. The conductors used are aluminium or annealed copper. The conductors are stranded in order to provide flexibility to the cable.

2. **Insulation :** Each conductor or core is covered by insulation of proper thickness. The commonly used insulating materials are varnished cambric, vulcanized bitume mpregnated paper.

3. **Metallic sheath :** The insulated conductors are covered by lead sheath or aluminium sheath. This provides the mechanical protection but mainly restricts moisture and other gases to reach to the insulation.

4. **Bedding :**

i. The metallic sheath is covered by another layer called bedding. The bedding consists of paper tape compounded with a fibrous material lime jute strands or hessian tape.

ii. The purpose of bedding is to protect the metallic sheath from corrosion and from mechanical injury resulting due to armouring.

5. **Armouring :** This layer consists of the layers of galvanized steel which provide protection to the cable from the mechanical injury.

6. **Serving :** The last layer above the armouring is serving. It is a layer of fibrous material like jute cloth which protects the armouring from the atmospheric conductions.

Que 5.8. **Discuss in brief about the different types of cables.**

Answer

A. **Cable :**

1. A cable is an assembly of two or more electrical conductors, usually held together with an overall sheath. The assembly is used to for transmission of electrical power.

2. The type of a cable is basically based on the voltage level for which it is manufactured and the material used for the insulation such as paper cotton, rubber etc.

B. **Types of cable :**

1. **Low tension cable (LT cable) :**

i. These are used for the voltage levels upto 6.6 kV.

ii. The paper is used as insulation in these cables. Some time resin is also used which increases the viscosity and helps to prevent drainage.

2. **Medium and high tension cables :**

i. The three phase medium and HT cables are three core cable. For voltage upto 66 kV the three core cable, *i.e.*, multicore cables are used.

ii. These cables are classified as :

a. **Belted cables :**

i. These are used for the voltage level upto 11 kV.

ii. The cores are not circular in shape. The cores are insulated from each other by use of impregnated paper.

b. **Screened type cables :** These cables are used for the voltage levels of 22 kV and 33 kV.

3. **Super tension (ST) cables :**

i. The ST cables are used for 132 kV to 275 kV voltage level.

ii. Such cables using oil or gas under pressure are called pressure cables and are of two types :

Scanned by TapScanner

a. **Oil filled cables :** In case of oil filled cables, the channels or ducts are provided within or adjacent to the cores, through which oil under pressure is circulated.

b. **Gas pressure cables :**
   1. In case of gas pressure cables an inert gas like nitrogen at high pressure is introduced. The pressure is about 12 to 15 atmospheres.
   2. Due to such a high pressure there is a radial compression due to which the ionization is totally eliminated. The working power factor of such cables is also high.

Que 5.9. **What is earthing ? Why is it necessary to have earthing in electric network?**

Answer

A. Earthing :

1. Earthing (or grounding) is the process of transferring the immediate discharge of electricity directly to the earth plate, by means of low resistance electrical cables or wires.
2. The earthing is done by connecting the non-current carrying part of the equipment or neutral of supply system to the ground.

B. Necessity of earthing :

1. It keeps people safe by preventing electric shocks.
2. It prevents damage to electrical appliances and devices by preventing excessive current from running through the circuit.
3. It prevents the risk of fire that could otherwise be caused by current leakage.
4. It provides the easiest path to the flow of short circuit current even after the failure of the insulation.

Que 5.10. **Why proper earthing is necessary ? What is the importance of earth's resistance value ?**

AKTU 2014-15(Sem-1), Marks 05

Answer

A. Necessity of earthing : Refer Q. 5.9, Page 5–10D, Unit-5.

B. Importance of earth's resistance value :

1. The earth resistance is the resistance offered by the soil and the electrode to the flow of earth leakage current which will flow in case of earth fault only.
2. Earth resistance value is directly proportional to soil resistivity value.

3. Soil resistivity directly affects the design of a grounding system.
4. When designing an extensive grounding system, it is advisable to locate the area of lowest soil resistivity in order to achieve the most economical grounding installation.
5. The value of soil resistivity should be low, because the earth resistance value is directly proportional to soil resistivity value.
6. The main purpose of keeping the earth resistance to a very low value is to give easy path to the flow of leakage or fault current as soon as it occurs.

Que 5.11. **Explain the need of earthing electrical devices. What are the important safety issues ?**

AKTU 2013-14(Sem-1), Marks 10

Answer

A. Necessity of earthing : Refer Q, 5.9, Page 5–10D, Unit-5.

B. Important safety issues :

1. Inspect tools, power cords, and electrical fittings for damage or wear prior to each use. Repair or replace damaged equipment immediately.
2. Use cords or equipment that is rated for the level of amperage or wattage.
3. Always use the correct size fuse. Replacing a fuse with one of a larger size can cause excessive currents in the wiring and possibly start a fire.
4. Be aware that unusually warm or hot outlets may be a sign that unsafe wiring conditions exists.
5. Risk of electric shock is greater in areas that are wet or damp. Install Ground Fault Circuit Interrupters (GFCIs) as they will interrupt the electrical circuit before a current sufficient to cause death or serious injury occurs.
6. Do not block access to circuit breakers or fuse bodies.

Que 5.12. **Write detailed note on importance of electrical safety issues.**

AKTU 2014-15(Sem-1), Marks 05

Answer

1. Electrical hazards are not readily visible. Even a trained eye might not identify an electrical hazard. An electrical hazard can be detected only by recognizing and observing indicators.
2. Similarly, contact with an exposed energized conductor or circuit part can cause a major injury or perhaps cause no injury at all.

Scanned by TapScanner

3. Understanding electrical hazards and being able to identify such hazards can reduce the risks associated with electrical installations. Knowledge about electrical safety can help everyone to live and work safely around electricity.

Important safety issues : Refer Q. 5.11, Page 5–11D, Unit-5.

Que 5.13. Why earthing is needed in an electrical system ? Enlist the various types of earthing system.

AKTU 2013-14(Sem-2), Marks 10

Answer

A. Necessity of earthing : Refer Q. 5.9, Page 5–10D, Unit-5.

B. Types of earthing system :

i. Plate earthing :

1. In this type of earthing plate either of copper or of G.I. (galvanized iron) is buried into the ground at a depth of not less than 3 meter from ground level.
2. The earth plate is embedded in alternative layer of coke and salts for a minimum thickness of about 15 cm.
3. The earth wire (copper wire for copper plate and G.I. wire for plate earthing) is securely bolted to an earth plate with the help of bolt nut and washer made of copper , in case of copper plate earthing and of G.I. in case of G.I. plate earthing.

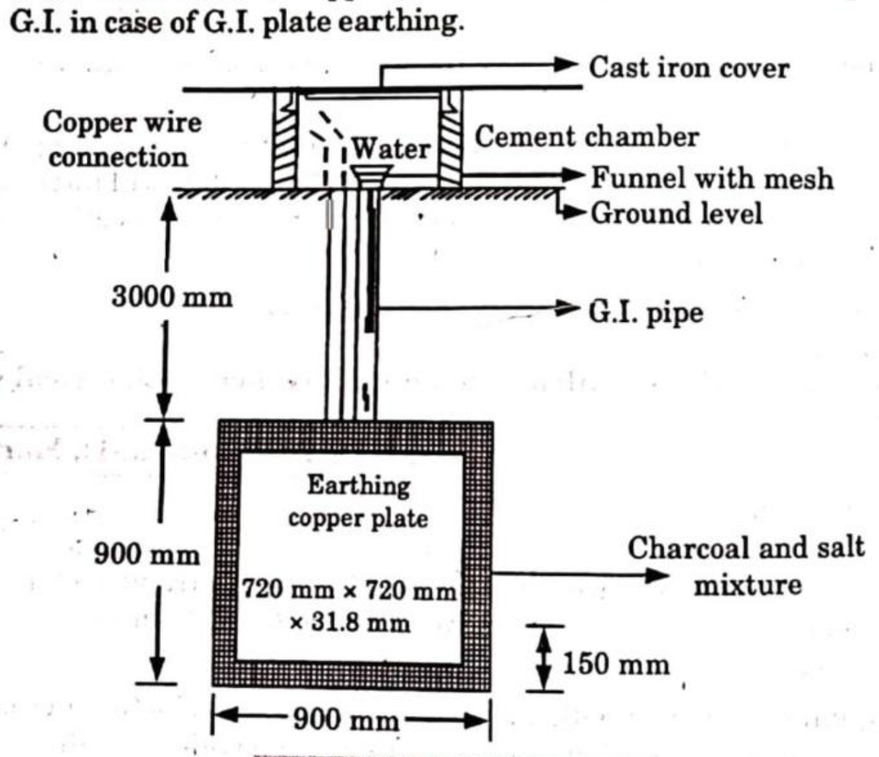

Fig. 5.13.1. Plate earthing.

ii. Pipe earthing :

1. Pipe earthing is best form of earthing and it is cheap also. In this system of earthing a G.I. pipe of 38 mm dia and 2 meters length is embedded vertically in ground to work as earth electrode but the depth depend upon the soil conditions.
2. Also the wire is embedded upto the wet soil.
3. The earth wires are fastened to the top section of the pipe with nut and bolts.
4. The pit area around the G.I. pipe is filled with salt and coal mixture for improving the soil conditions and efficiency of the earthing system.

iii. Rod earthing :

1. In this system of earthing 12.5 mm diameter solid rods of copper, 16 mm diameter solid rod of G.I. or steel or hollow section of 25 mm G.I. pipe of length not less than 3 meters are driven vertically into the earth.
2. In order to increase the embedded length of electrode under the ground, which is some time necessary to reduce the earth resistance to desired value more than one rod section are hammered one above the other.
3. This system of earthing is suitable for areas which are sandy in character.
4. This system of earthing is very cheap.

iv. Strip or wire earthing :

1. In this system of earthing strip electrode of cross section not less than 25 mm into 1.6 mm of copper or 25 mm × 4 mm of G.I. or steel are buried in horizontal trenches of minimum depth of 0.5 m.
2. If round conductor are used their cross sectional area shall not be smaller than three if copper is used and 6 mm^2 if G.I. or steel is used.
3. The length of buried conductor shall be sufficient to give the required earth resistance (about 0.5 Ω to 1.5 Ω).
4. It shall however be not less than 15 m.
5. The electrode shall be as widely distributed as possible in a single straight or circular trenches radiating from a point
6. This type of earthing is used in rocky soil earth bed because at such places excavation work for plate earthing is difficult.

PART-3

Types of Batteries, Important Characteristics for Batteries, Elementary Calculations for Energy Consumption and Savings, Battery Backup.

Scanned by TapScanner

CONCEPT OUTLINE : PART-3

- **Types of battery :**

1. **Primary battery :** A primary battery is a disposable kind of battery. Once used, it cannot be recharged.
2. **Secondary battery :** Secondary batteries are rechargeable batteries. Once discharged, it can be recharged again.

- Electricity consumption$_{day}$ = $\frac{\text{Meter reading}_{end} - \text{Meter reading}_{start}}{\text{Days in period}}$

Questions-Answers

Long Answer Type and Medium Answer Type Questions

Que 5.14. Discuss different types of primary battery.

Answer

A. Alkaline batteries :

1. Alkaline batteries are non-rechargeable, high energy density, batteries that have a long life span. It has 1.5 V output.
2. It consists of a zinc anode and manganese dioxide cathode in an alkaline electrolyte (potassium hydroxide).
3. It works with high efficiency even with continuous use, due to low internal resistance.
4. **Applications :** In remote controls, clocks, and radios. The high run time makes alkaline batteries ideal for digital cameras, hand held games, MP3 players etc

B. Zinc-carbon batteries :

1. Zinc-carbon batteries are also known as dry cells (as the nature of electrolyte used in these cells is dry), which come in a composition of a carbon rod (cathode) surrounded by a mixture of carbon powder and manganese dioxide.
2. This whole combination is packed in a zinc container acting as the anode. The electrolyte is a mixture of ammonium chloride and zinc chloride.
3. The typical voltage value is a little less than 1.5 V. These batteries are durable and have longer lives.
4. **Applications :** Used in low power drain applications such as flash lights, remote controls, toys, and table clocks.

C. Mercury batteries :

1. It contains mercuric oxide with manganese dioxide. They are deep discharge batteries and voltage level does not fall below 1.35 V until 5 % energy level is reached.
2. These batteries are less popular because of low output voltage. Furthermore, mercury is toxic and can cause hazards for humans.
3. **Applications :** This battery is useful for photographic light meters and electronic devices.

D. Zinc chloride batteries :

1. This cell is also referred to as a heavy-duty type battery.
2. It is a modified zinc-carbon batteries.
3. It has little chance of liquid leakage because the cell consumes water along with the chemically active materials. The cell is usually dry at the end of its useful life.

E. Silver oxide batteries :

1. This battery consists of a zinc anode, silver oxide cathode, and potassium or sodium hydroxide electrolyte.
2. It is typically available as 1.5 V, miniature button form.
3. **Applications :** Hearing aids, cameras, and watches.

Que 5.15. Discuss different types of battery.

Answer

A. Battery : A battery is a source of electrical energy, which is provided by one or more electrochemical cells of the battery after conversion of stored chemical energy.

B. Types of battery :

1. Primary battery :

i. A primary battery is a disposable kind of battery. Once used, it cannot be recharged.

ii. **Types of primary battery :** Refer Q. 5.14, Page 5–14D, Unit-5.

2. Secondary battery :

i. Secondary batteries are rechargeable batteries. Once empty, it can be recharged again.

ii. **Types of secondary battery :**

a. Lead-Acid Batteries :

1. Lead-acid batteries are the rechargeable kind of batteries. These large, heavy weight batteries find the major application in automobiles as these fulfill the high current requirements of the heavy motors.

Scanned by TapScanner

2. The composition of lead-acid battery changes in charged and discharged states.
3. A combination of Pb (negative) and PbO_2 (positive) as electrodes with H_2SO_4 as electrolyte in charged form and $PbSO_4$ and water in discharged form.
4. **Applications :**
   i. Application of lead-acid battery is in starting, lightning, and ignition systems of automobiles.
   ii. It can also be used as backup power supply for high end servers, personal computers, telephone exchanges, and in off-grid homes with inverters.

b. Lithium batteries :

1. Lithium batteries are rechargeable (secondary) batteries, where lithium in its pure ion compound form is used.
2. Depending on the design and chemical compounds used, lithium batteries can produce voltages from 1.5 volts to 3.7 volts.
3. The most common type of lithium battery used in consumer applications uses manganese dioxide as cathode and metallic lithium as anode.
4. **Applications :** It is used in portable consumer instruments like calculators, digital diaries, wrist watches and stop watches, toys, and artificial pacemakers.

Que 5.16. **Discuss important characteristics of batteries.**

Answer

A. Amps/Ampere-hour :

1. It is also known as amperes. This is the rate at which electrons flow in a wire. The units are coulombs per second.
2. One ampere-hour is equal to a current of one ampere flowing for one hour.
3. A unit-quantity of electricity used as a measure of the amount of electrical charge that may be obtained from a storage battery before it requires recharging.

B. Capacity : The capacity of a battery is expressed as the total quantity of electricity involved in the electrochemical reaction and is defined in terms of coulombs or ampere-hours (Ah) or the total number of ampere hour or watt-hours that can be withdrawn from a fully charged cell or battery, under specified conditions of discharge, is termed as the capacity of a battery.

C. Power : The power generated by a battery can be calculated as

$$W = VI$$

where, V = Voltage
W = Power
I = Current.

D. Power density :

1. Power density = Energy (E)/time (t)/mass (kg)
   = Energy (qV)/time (t)/mass (kg) of cell
   = Power/mass (units are W/kg)
2. The ratio of the power delivered by battery to its weight, W/kg, is also known as the power density of a battery.

E. Energy density : The energy density is determined by the voltage of the battery and the amount of charge that can be stored, $E = q\,V$.

F Efficiency :

1. **Voltage efficiency** is described as the ratio of average voltage during discharge to average voltage during recharge under specified conditions.
2. **Watt-hour efficiency** is known as the ratio of watt-hours delivered on discharge of a battery to the watt-hour needed to restore it to its original state under specified conditions of charge and discharge.
3. **Ampere-hour efficiency :** The ratio of the output of a secondary cell or battery, measured in ampere-hours, to the input required to restore the initial state of charge, under specified conditions.

G. Cycle life : For rechargeable batteries, the duration of satisfactory performance, measured in years or in the number of charge/discharge cycles. In practice, end of life is usually considered to be reached when the cell or battery delivers approximately 80 % of the rated ampere-hour capacity.

Que 5.17. **Discuss the calculation of following :**

A. Electricity consumption per day
B. Electricity consumption per year
C. Energy saving.

Answer

A. Electricity consumption per day :

1. To calculate the daily electricity consumption, the difference between the meter readings is divided by the number of days in the period covered.
2. Mathematically,

$$\text{Electricity consumption}_{\text{day}} = \frac{\text{Meter reading}_{\text{end}} - \text{Meter reading}_{\text{start}}}{\text{Days in period}}$$

Scanned by TapScanner

B. Electricity consumption per year :

1. To calculate the electricity consumption for 1 year, the daily electricity consumption can be multiplied with 365 days.
2. Mathematically,

   Electricity $consumption_{year}$ (kWh/yr)

   $= \text{Electricity consumption}_{day} \times 365$ days

C. Energy saving :

1. The electricity consumption in the previous period, extrapolated to 1 year, can be calculated by dividing the electricity consumption in the previous period by the number of days in that period, and multiplying with 365 days.
2. The difference between the yearly electricity consumption in the previous period and in the monitoring period is the annual electricity savings achieved.
3. Mathematically,

   Electricity saving (kWh/yr)

$$= 365 \times \frac{\text{Electricity consumption}_{previous}}{\text{Days in previous period}} - \text{Electricity consumption}_{year}$$

Que 5.18. **A household has the following meter readings : 12300 (1 December 2016); 13200 (28 February 2017). The previous energy bill was: 3960 kWh (from 10 November 2015 to 5 November 2016). Calculate daily electricity consumption, electricity consumption extrapolated to 1 year and electricity saving.**

Answer

1. The daily electricity consumption during the monitoring period

   = (13200 – 12300) / 90 days = 10 kWh/day
2. The electricity consumption extrapolated to 1 year

   = 10 kWh/day × 365 days

   = 3650 kWh/yr
3. The electricity savings extrapolated to 1 year

   = 365 × (3960 kWh / 360 days) – 3650 kWh/yr

   = 365 kWh/yr

Que 5.19. **Discuss calculation of battery backup. Explain with suitable example.**

Answer

A. Battery backup :

1. Time taken to discharge a battery is known as battery backup.

2. Battery backup time can be computed using this formula :

$$\text{Time}_{Backup} = \frac{\text{Voltage}_{battery} \times \text{Ah rating}_{battery}}{\text{Load}}$$

B. Example :

If no. of bulbs = 2 and no. of ceiling fan = 1

Rating of each bulb = 15 watt and rating of each fan = 100 watt

Rating of battery is 12 V with Ah rating of 150.

Then,

Total load = (15 × 2) + (100 × 1) = 130 watts

$$\text{Time}_{Backup} = \frac{\text{Voltage}_{battery} \times \text{Ah rating}_{battery}}{\text{Load}}$$

= 12 × 150/ 130

= 13.84 hours

☺☺☺

Scanned by TapScanner

1 UNIT

DC Circuits (2 Marks Questions)

1.1. Define ideal voltage and current source.

AKTU 2014-15(Sem-2), Marks 02

Ans. **Ideal voltage source :** A constant voltage source is an ideal source element capable of supplying any current at a given voltage. If the internal resistance of a voltage source is zero, the terminal voltage is equal to the voltage across the source and is independent of the amount of load current.

Ideal current source : A source that supplies a constant current to a load even if its impedance varies is called ideal current source. The current supplied by such a source should remain constant irrespective of the load impedance.

1.2. What are the properties of ideal voltage and current sources ?

AKTU 2013-14(Sem-1), Marks 02

Ans.

1. An ideal voltage source has a terminal voltage V which is independent of the current i through the source.
2. An ideal current source is such that the current i through it is independent of voltage V across it.

1.3. Define bilateral and unilateral elements with example.

AKTU 2015-16(Sem-1), Marks 02

OR

Define unilateral and bilateral elements.

AKTU 2017-18(Sem-2), Marks 02

Ans. **Bilateral elements :** An electric circuit whose characteristics are same in either direction is called bilateral circuit e.g. resistors, inductors etc.

Unilateral elements : An electric circuit whose characteristics changes with the direction of its operation is called the unilateral circuit e.g. diode, transistors etc.

1.4. Explain :

i. Ideal current source **ii. Practical voltage source.**

AKTU 2017-18(Sem-1), Marks 02

Ans.

i. **Ideal current source :** Refer Q. 1.1, Page SQ–1D, Unit-1, 2 Marks Questions.

ii. **Practical voltage source :** Source having some amount of internal resistances are known as practical voltage source. Due to this internal resistance, voltage drop takes place, and it causes the terminal voltage to reduce.

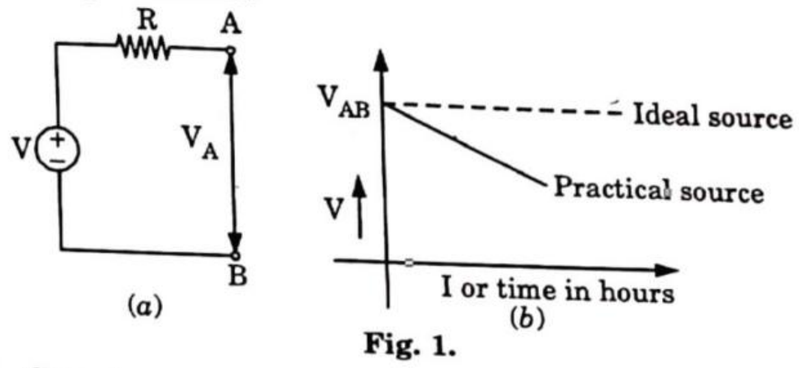

Fig. 1.

1.5. Give two comparisons between unilateral and bilateral elements.

AKTU 2016-17(Sem-1), Marks 02

Ans.

S. No.	Unilateral element	Bilateral element
1.	Voltage and current relation is different in two possible directions.	Voltage and current relation is the same in either direction.
2.	Example: Vacuum diode, silicon diode, rectifier etc.	Example: Any conducting wires, resistor, capacitor, inductor etc.

1.6. Define active and passive elements.

AKTU 2017-18(Sem-2), Marks 02

OR

Define :

i. **Active and passive element**

ii. **Bilateral and unilateral elements**

AKTU 2017-18(Sem-1), Marks 02

Ans. **Active and passive elements :** A network that contains energy sources together with the circuit elements are known as active elements whereas a network that do not contain energy sources together with circuit elements are known as passive elements.

Bilateral and unilateral elements : Refer Q. 1.3, Page SQ–1D, Unit-1, 2 Marks Questions.

1.7. Write two characteristics of active elements.

AKTU 2016-17(Sem-2), Marks 02

Scanned by TapScanner

Ans.

1. For an active element the ratio of the voltage across it to the current flowing is negative.
2. These elements supply energy to the network.

1.8. Distinguish between active and passive elements.

AKTU 2015-16(Sem-2), Marks 02

Ans.

S. No.	Active element	Passive element
1.	It supplies energy.	It consumes energy.
2.	For an active element, the ratio of the voltage to the current is negative.	For passive elements, the ratio of voltage to current is positive.

1.9. What information is obtained from the loop ?

AKTU 2017-18(Sem-2), Marks 02

Ans. Algebraic sum of potential differences is obtained from loop.

1.10. State Norton's theorem.

AKTU 2016-17(Sem-2), Marks 02

Ans. Any linear circuit containing several energy sources and resistances can be replaced by a single constant current generator in parallel with a single resistor.

1.11. Find current in 2 Ω.

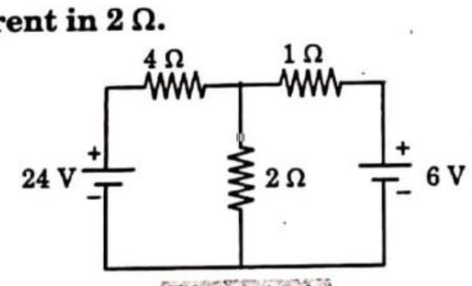

Fig. 1.11.1.

AKTU 2013-14(Sem-1), Marks 02

Ans.

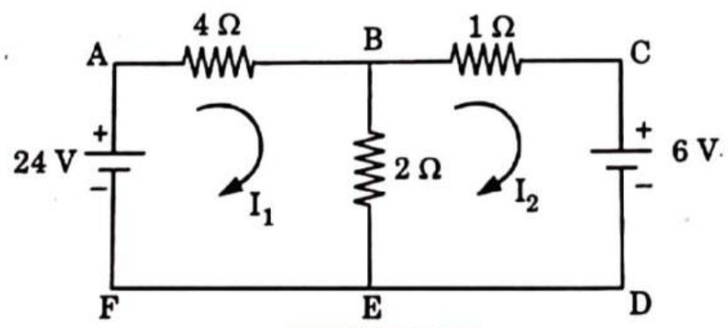

Fig. 1.11.2.

For loop ABEFA,

$$24 - 4I_1 - 2(I_1 - I_2) = 0$$
$$24 - 4I_1 - 2I_1 + 2I_2 = 0$$
$$24 - 6I_1 + 2I_2 = 0$$
$$6I_1 - 2I_2 = 24 \quad \text{...(1.11.1)}$$

For loop BCDEB,

$$-2(I_2 - I_1) - I_2 - 6 = 0$$
$$-2I_2 + 2I_1 - I_2 - 6 = 0$$
$$-3I_2 + 2I_1 - 6 = 0$$
$$2I_1 - 3I_2 = 6 \quad \text{...(1.11.2)}$$

Solving eq. (1.11.1) and (1.11.2) we get,

$$I_1 = 4.28 \text{ A} \quad \text{and} \quad I_2 = 0.8571 \text{ A}$$

Thus, the current in $2\,\Omega = I_1 - I_2 = 3.42$ A

1.12. Give two limitation of Thevenin's theorem.

AKTU 2016-17(Sem-1), Marks 02

Ans.

i. Not applicable to the circuits consisting of non-linear elements.
ii. Not applicable to unilateral networks.

1.13. Enlist the limitations of ohm's law.

AKTU 2013-14(Sem-2), Marks 02

Ans.

1. This law cannot be applied to unilateral networks.
2. This law is not applicable for non-linear elements.

1.14. State superposition theorem and Norton's theorem.

AKTU 2015-16(Sem-1), Marks 02

Ans.

A. **Superposition theorem :** If a number of voltage or current sources are acting simultaneously in a linear network, the resultant current in any branch is the algebraic sum of the current that would be produced in it, when each source acts alone replacing all other independent sources by their internal resistances.

B. **Norton's theorem :** Refer Q. 1.10, Page SQ–3D, Unit-1, 2 Marks Questions.

☺☺☺

Scanned by TapScanner

2 UNIT

Steady State Analysis of 1ϕ AC Circuits (2 Marks Questions)

2.1. Define RMS value and average value.

AKTU 2015-16(Sem-1), Marks 02

Ans. **Average value :** It is expressed as a steady current (DC) which transfers across any circuit the same charge as is transferred by that alternating current during the same time.

Root Mean Square (RMS) value : It is given by that steady current (DC) which when flowing through a given circuit for a given time produces the same heat as produced by the alternating current when flowing through the same circuit for same time.

2.2. The equation of an alternating current is $i = 141.4 \sin 314t$. What is RMS value of current and frequency ?

AKTU 2015-16(Sem-2), Marks 02

Ans.

Given : $i = 141.4 \sin 314t = I_m \sin \omega t$
To Find : I_{rms} and f.

$$I_{rms} = \frac{I_m}{\sqrt{2}} = \frac{141.4}{\sqrt{2}} = 99.98 \approx 100 \text{ A}$$

$$f = \frac{\omega}{2\pi} = \frac{314}{2 \times 3.14} = 50 \text{ Hz}$$

2.3. What will be the RMS value of voltage for $v = 416 \sin \omega t$ waveform ?

AKTU 2016-17(Sem-1), Marks 02

Ans.

Given : $v = 416 \sin \omega t$
To Find : v_{rms}.

The RMS value for the waveform :

$$v_{rms} = \frac{V_m}{\sqrt{2}} = \frac{416}{\sqrt{2}} = 294.15 \text{ V}$$

2.4. Write a note on : Amplitude, mechanical degrees and angular velocity.

AKTU 2017-18(Sem-2), Marks 02

Ans. **Angular velocity :** The velocity with which the coil moves, is ratio of angle turned per unit time.

$$\omega = \frac{2\pi}{T} = 2\pi f \text{ as } f = \frac{1}{T}.$$

Amplitude : The maximum value of sinusoidal wave attained during one cycle. It is also called as peak. It is denoted by E_{max} for maximum voltages and I_{max} for maximum current.

Mechanical degrees : Mechanical degree in electrical machines refers to the rotation of the shaft. One revolution of the shaft equals 360 mechanical degree.

2.5. Define form factor and peak factor.

AKTU 2014-15(Sem-2), Marks 02

OR

Explain form factor and peak factor.

AKTU 2017-18(Sem-2), Marks 02

Ans. **Form factor :** Form factor is defined as the ratio of effective value to the average or mean value of periodic wave.

$$\text{Form factor} = \frac{\text{Effective value}}{\text{Average value}}$$

Peak factor : Peak or ~~amplitude factor of a periodic wave~~ is defined as the ratio of maximum ~~or peak~~ to the effective or rms value of the wave.

$$\text{Peak factor} = \frac{\text{Maximum value}}{\text{Effective value}}$$

2.6. Determine the form factor of AC current $i = 400 \sin (157\, t + \pi/6)$.

AKTU 2013-14(Sem-2), Marks 02

Ans.

Given : $i = 400 \sin (157\, t + \pi/6)$
To Find : Form factors.

$$\text{Form factor} = \frac{\text{RMS value (effective value) of current}}{\text{Average value of current}}$$

$$= \frac{\frac{I_{max}}{\sqrt{2}}}{\frac{2I_{max}}{\pi}} = \frac{\pi}{2\sqrt{2}} = 1.11$$

Scanned by TapScanner

2.7. What is the significance of phasor and vector in circuit analysis ? **AKTU 2013-14(Sem-1), Marks 02**

Ans. The phasor and vector in circuit analysis enables one to understand its magnitude and position with respect to reference line.

2.8. The two voltage waves are given : $V_A = 150 \sin(\omega t + 45°)$ and $V_B = 75 \sin(\omega t - 15°)$. Which voltage wave is leading with other and what will be the phase angle between V_A and V_B ?

AKTU 2016-17(Sem-2), Marks 02

Ans. **Phasor diagram of V_A and V_B :**

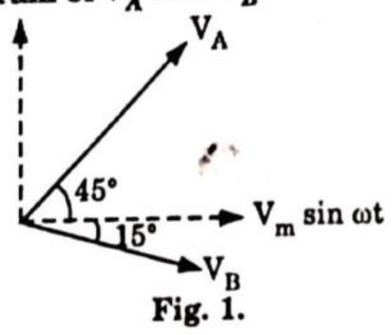

Fig. 1.

From phasor diagram voltage V_A is leading V_B.

Phase angle between V_A and $V_B = 45° + 15° = 60°$

2.9. What do you mean by apparent power, active power and reactive power ? **AKTU 2015-16(Sem-2), Marks 02**

Ans. **Apparent power :** The product of rms values of current and voltage, VI is called the apparent power. It is measured in volt ampere or kVA.

Active power : It is the product of apparent power and power factor and expressed in watts or kW.

Reactive power : The product of apparent power, VI and the sine of the angle between voltage and current, $\sin\phi$ is called reactive power. It is expressed in VAR.

2.10. What is the power factor of a circuit having impedance of $3 + j4$ ohms ? **AKTU 2017-18(Sem-1), Marks 02**

Ans.

$$\phi = \tan^{-1}\left(\frac{4}{3}\right)$$

$$\phi = 53.13°$$

Power factor, $\cos\phi = \cos(53.13°) = 0.605$

2.11. Write two problems of low power factor in a system. **AKTU 2013-14(Sem-2), Marks 02**

Ans.

1. Low power factor results in large voltage drop in generator, transmission lines, transformer and distributors which results in poor regulation.
2. For the same power to be transmitted at low power factor, the transmission cable has to carry more current. Thus it requires more conductor material of cable to deliver the load at low power factor.

2.12. Give two causes of low power factor. **AKTU 2016-17(Sem-1), Marks 02**

Ans.

1. The main cause of low power factor is inductive load. In pure inductive circuit, current lags 90° from voltage, this large difference of phase angle between current and voltage causes low power factor.
2. Varying load in power system.

2.13. What do you understand by active and reactive powers ? Why reactive power is not present in DC circuits ? **AKTU 2013-14(Sem-1), Marks 02**

Ans. **Active power and Reactive power :** Refer Q. 2.9, Page SQ–7D, Unit-2, 2 Marks Questions.

Reason : Since in DC circuits, both voltage and current are in same phase, hence there is no reactive power in DC circuits.

2.14. Enlist the main causes of a large kVAR in a system. **AKTU 2013-14(Sem-2), Marks 02**

Ans. Reactive power is given by

$$Q = \frac{VI \sin\phi}{1{,}000} \text{ kVAR}$$

Now when load is inductive then power factor becomes poor and reactive power or kVAR becomes large.

2.15. $V = \sqrt{2}\ 200 \cos 500t$, $P_{avg} = 250$ W, power factor = 0.7 lagging. Calculate the reactive power of the system.

Ans.

$$\therefore \quad V_{rms} = \frac{\sqrt{2} \times 200}{\sqrt{2}} = 200 \text{ V}$$

$$\therefore \quad V_{avg} = \frac{2}{\pi} \times \sqrt{2} \times 200 = 180 \text{ V} \qquad \left(\because V_{avg} = \frac{Z}{\pi} V_{max}\right)$$

$$\therefore \quad P_{avg} = V_{avg} \times I_{avg}$$

Scanned by TapScanner

$$\Rightarrow \quad I_{avg} = \frac{P_{avg}}{V_{avg}} = \frac{250}{180} = 1.38 \text{ A}$$

$$\therefore \quad I_{max} = \frac{1.38 \times \pi}{2} = 2.167 \text{ A} \qquad \left(\because I_{avg} = \frac{2}{\pi} I_{max}\right)$$

$$\therefore \quad I_{rms} = \frac{2.167}{\sqrt{2}} = 1.532 \text{ A} \qquad \left(\because I_{rms} = \frac{I_{max}}{\sqrt{2}}\right)$$

And $\cos\phi = 0.7$

$\therefore \quad \phi = 45.57°$

$\therefore$ Reactive power $= VI \sin\phi$

$= 200 \times 1.532 \times \sin(45.57°) = 218.813$ VAR

2.16. What do you mean by the term resonance ?

AKTU 2015-16(Sem-1), Marks 02

Ans. Resonance is the term employed for describing the steady state operation of a circuit or system at that frequency for which the resultant response is in time phase with the source function despite the presence of energy-storing elements.

2.17. What is series resonance ?

AKTU 2016-17(Sem-2), Marks 02

Ans. An RLC series circuit is said to be in electrical resonance when $X_L = X_C$ *i.e.*, the net reactance $X = 0$.

2.18. What will be the current at resonance in series and parallel RLC circuit ?

Ans. At resonance, in series RLC circuit, the current is maximum and in parallel RLC circuit, the current is minimum.

2.19. A series RLC circuit $R = 10\ \Omega$, $L = 0.1$ H, $C = 8\ \mu$F. Calculate half power frequencies for the circuit.

AKTU 2013-14(Sem-1), Marks 02

Ans. Half power frequencies

$$f_1 = f_r - \frac{R}{4\pi L} \text{ and } f_2 = f_r + \frac{R}{4\pi L}$$

Since, $$f_r = \frac{1}{2\pi}\sqrt{\frac{1}{LC}} = \frac{1}{2\pi}\sqrt{\frac{1}{0.1 \times 8 \times 10^{-6}}} = 177.94 \text{ Hz}$$

$$\therefore \quad f_1 = f_r - \frac{R}{4\pi L} = 177.94 - \frac{10}{4\pi \times 0.1} = 170 \text{ Hz}$$

and $$f_2 = f_r + \frac{R}{4\pi L} = 177.94 + \frac{10}{4\pi \times 0.1} = 185.9 \text{ Hz}$$

2.20. A series circuit has $R = 10\ \Omega$, $L = 0.02$ H and $C = 3\ \mu$F. Calculate Q-factor of the instruments.

AKTU 2014-15(Sem-2), Marks 02

Ans.

$$Q = \frac{1}{2}\sqrt{\frac{L}{C}} = \frac{1}{10}\sqrt{\frac{0.02}{3 \times 10^{-6}}} = 8.16$$

2.21. Write four advantages of three-phase system.

AKTU 2016-17(Sem-2), Marks 02

Ans.

1. Three-phase system gives steady output.
2. It is possible to produce rotating magnetic field with stationary coils by using three-phase system. Hence, three-phase motors are self starting.
3. For transmission and distribution, three phase system needs less copper or conducting material.
4. Power factor and efficiency is high.

2.22. A three phase Y connected balanced load is connected by 400 V, 50 Hz, 3 phase supply. The impedance of each phase is 10 ohm. Find the total phase power.

AKTU 2017-18(Sem-1), Marks 02

Ans.

1. $$V_P = \frac{V_L}{\sqrt{3}} = \frac{400}{1.732} = 230.94 \text{ V}$$

$$I_p = \frac{230.94}{10} = 23.09 \text{ A}$$

2. Power, $P = 3\, V_P I_P = 3 \times 230.94 \times 23.09$

$P = 15.99$ kW

2.23. Why series resonant circuit is known as acceptor circuit and parallel resonant circuit as rejecter circuit ?

AKTU 2017-18(Sem-1), Marks 02

Ans. **Acceptor circuit :** A series resonance circuit is known as an acceptor circuit because at resonance, the impedance of the circuit is at its minimum; so easily accepts the current whose frequency is equal to its resonant frequency.

Rejecter circuit : Parallel resonant circuit is known as an rejecter circuit because at resonance, the impedance of the circuit is at its maximum thereby suppressing or rejecting the current whose frequency is equal to resonant frequency.

Scanned by TapScanner

2.24. Differentiate between star and delta connections.

AKTU 2017-18(Sem-2), Marks 02

Ans.

S. No.	Star connections	Delta connections
1.	In star connection, there is a common point known as neutral or star point.	There is no neutral point in delta connection.
2.	Line voltage = $\sqrt{3}$ phase voltage.	Line voltage = Phase voltage.
3.	Line current = Phase current.	Line current = $\sqrt{3}$ phase current.

2.25. Write the practical units of electrical energy and mechanical power.

AKTU 2013-14(Sem-2), Marks 02

Ans. **Units of electrical energy :** kWh or VAs or J.
Units of mechanical power : W or J/s or hp.

2.26. What is selectivity ?

AKTU 2013-14(Sem-2), Marks 02

Ans. It is the ability of the particular circuit to respond to a particular frequency by simply neglecting all other frequencies.

2.27. What is meant by current magnification ?

AKTU 2015-16(Sem-1), Marks 02

Ans. It means that more current is flowing in the circuit than actually supplied.

☺☺☺

3 UNIT

Transformers (2 Marks Questions)

3.1. Define the terms : permeability, relative permeability and reluctance applied to magnetic circuits.

AKTU 2015-16(Sem-1), Marks 02

OR

What is magnetomotive force ? And write its unit.

AKTU 2013-14(Sem-1), Marks 02

OR

Define MMF and write its unit.

AKTU 2014-15(Sem-2), Marks 02

OR

Define magnetomotive force (mmf).

AKTU 2016-17(Sem-2), Marks 02

Ans.

1. **Magnetomotive force :** It is defined as the force responsible for the flow or generation of flux.

   $$\text{mmf} = N \times I$$

   where N = Number of turns
   I = Current through coil.

   Its unit is ampere-turns.
2. **Reluctance:** It is the opposition to the flow (or set up) of flux in a material. Reluctance is denoted by S.
3. **Permeability :** It is defined as the ability of a material to carry flux lines.
4. **Relative permeability :** It is defined as the ratio of flux density in a particular medium produced by a magnet to the flux density in air or vacuum by the same magnet under the identical operating conditions.

3.2. What will happen if the primary of a transformer is connected to DC supply ?

AKTU 2015-16(Sem-1), Marks 02

Scanned by TapScanner

OR

Why transformer is not used on DC ?

AKTU 2017-18(Sem-1), Marks 02

Ans. If a rated DC voltage is applied to the primary of a transformer, the flux produced in the transformer core will not vary but remain constant in magnitude and therefore, no emf will be induced in the secondary winding except at the moment of switching on. And inductance of the winding to the DC current is zero so very large current will flow and winding will burn out.

3.3. What do you understand by the term "ideal transformer"?

AKTU 2013-14(Sem-2), Marks 02

Ans. A transformer having following ideal properties is hypothetical and is referred to as the ideal transformer.

1. No winding resistance
2. No magnetic leakage
3. No iron loss
4. Zero-magnetizing current.

3.4. Draw equivalent circuit diagram of single-phase transformer.

AKTU 2014-15(Sem-2), Marks 02

Ans.

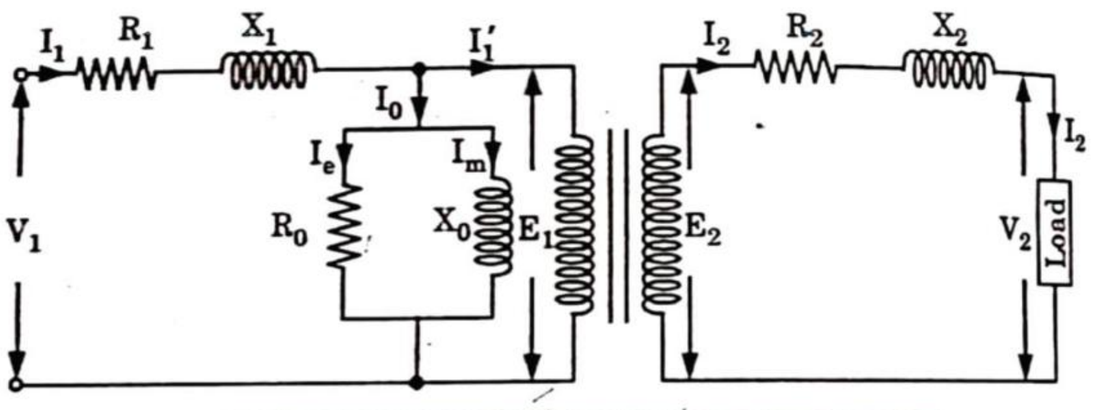

Fig. 3.4.1. Equivalent circuit of a transformer.

3.5. Write emf equation of single phase transformer.

AKTU 2016-17(Sem-1), Marks 02

Ans. Rms value of emf, $E = 4.44\, fN\phi$

$\therefore$ rms value of induced emf in primary :

$$E_1 = 4.44\, f N_1 \phi_m$$

and rms value of secondary induced emf is :

$$E_2 = 4.44\, f N_2 \phi_m$$

3.6. Write two differences between transformer and auto-transformer.

AKTU 2016-17(Sem-2), Marks 02

Ans.

S. No.	Transformer	Auto-transformer
1.	Efficiency of transformer is comparatively low.	Efficiency of auto-transformer is comparatively high.
2.	Larger in size.	Smaller in size.
3.	It has fixed output voltage.	It has variable output voltage.

3.7. What is the typical use of an autotransformer ?

Ans. Autotransformer is used for interconnection of power systems of different voltage levels.

3.8. Large ampere turns are needed to create flux in the air gap as compared to steel. Why ?

AKTU 2015-16(Sem-2), Marks 02

Ans. Since permeability of air is less as compared to steel, hence large ampere turns are needed to create flux in the air gap.

3.9. A 400 V/200 V single-phase transformer has primary winding resistance 1.0 ohm and secondary winding resistance 0.2 ohm. What will be total resistance of transformer referred to the primary side ?

AKTU 2015-16(Sem-2), Marks 02

Ans. [Here, 1, 2 is used for primary and secondary terminal]

R_{1e} = equivalent resistance transferred to primary

$$= R_1 + \left(\frac{N_1}{N_2}\right)^2 R_2 = 1.0 + \left(\frac{400}{200}\right)^2 (0.2)$$

$$\therefore \quad R_{1e} = 1.8\,\Omega$$

3.10. If in a single-phase transformer core, hysteresis and eddy current losses are 80 W and 50 W at normal voltage and frequency, then calculate losses when voltage and frequency are increased by 20 %.

AKTU 2013-14(Sem-1), Marks 02

Ans. When voltage and frequency are increased in same ratio, flux density remains unchanged,

Thus, $$\frac{f_2}{f_1} = \frac{120}{100} = 1.2$$

$\therefore$ Hysteresis loss, $$P_h' = P_h \times \frac{f_2}{f_1} = 80 \times 1.2 = 96 \text{ W}$$

Eddy current loss, $$P_e' = P_e \times \left(\frac{f_2}{f_1}\right)^2 = 50 \times (1.2)^2 = 72 \text{ W}$$

☺☺☺

Scanned by TapScanner

4 UNIT

Electrical Machines (2 Marks Questions)

4.1. Write the emf equation of a DC generator.

AKTU 2013-14(Sem-2), Marks 02

Ans. Total generated e.m.f, $E_g = \frac{P\phi}{60/N} = \frac{P\phi N}{60}$

4.2. Draw speed-torque characteristic of DC series motor.

AKTU 2014-15(Sem-2), Marks 02

Ans.

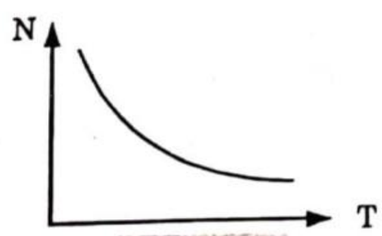

Fig. 4.2.1.

4.3. What do you mean by back emf in DC motor ?

AKTU 2016-17(Sem-1), Marks 02

Ans. When the motor armature continues to rotate due to motor action, the armature conductors cut the magnetic flux and, therefore, emfs are induced in them. This induced emf is known as back emf.

4.4. Draw torque v/s speed characteristics of a DC series motor and explain why the motor should not be started at no load ?

AKTU 2015-16(Sem-2), Marks 02

Ans. **Speed-torque characteristics :** Refer Q. 4.2, Page SQ–15D, Unit-4, 2 Marks Questions.

Reason : Since on no-load the speed is dangerously high, the machine may get damaged due to heavy centrifugal forces set up in the rotating parts.

4.5. What will happen if the back emf of DC motor vanishes ?

Ans. When load is increased, motor slows down, back emf falls, causing large current to flow in armature, thus increasing the electromagnetic torque. Motor slows down till steady state conditions are attained. Reverse mechanism occurs when load on the motor falls. Hence this self-regulating mechanism would not be possible if there was no back emf.

4.6. What are the advantages of wound rotor motors over squirrel cage motors ?

AKTU 2015-16(Sem-1), Marks 02

Ans.

1. High starting torque with low starting current.
2. Adjustable speed.
3. Nearly constant speed, smooth acceleration under heavy loads, no abnormal heating during starting.

4.7. Explain the term slip and slip speed.

AKTU 2017-18(Sem-1), Marks 02

Ans. **Slip :** The difference between the speed of the stator field, known as synchronous speed N_s and the actual speed of the rotor N is known as the slip and is denoted by s.

$$s = \frac{N_s - N}{N_s}$$

Slip speed : The difference between the synchronous speed and the actual speed of the rotor is known as slip speed.

4.8. What is typical use of starter in motor ?

AKTU 2013-14(Sem-2), Marks 02

Ans. At starting since $s = 1$, the rotor induced emf E_{r0} is maximum which produces much larger current I_2. Since stator current I_{st} has to feed this high current plus magnetising inrush current at starting, the primary starting current I_{st} is 8 to 9 times to that of rated current. This current may burn the windings and damage it permanently. Therefore to limit the starting current starters are needed.

4.9. Write applications of single-phase induction motor.

AKTU 2014-15(Sem-2), Marks 02

Ans.

i. Squirrel cage induction motor is suitable for constant speed industrial drives of small power where speed control is not required, such as flour mills etc.

Scanned by TapScanner

ii. Wound rotor (or slip ring) induction motor are used for loads requiring speed control such as for driving line shafts, lifts, pumps, generators, cranes etc.

4.10. Draw slip v/s torque characteristics of a three-phase induction motor and indicate :

i. Stable operating zone

ii. Induction generator operating zone.

AKTU 2015-16(Sem-2), Marks 02

Ans.

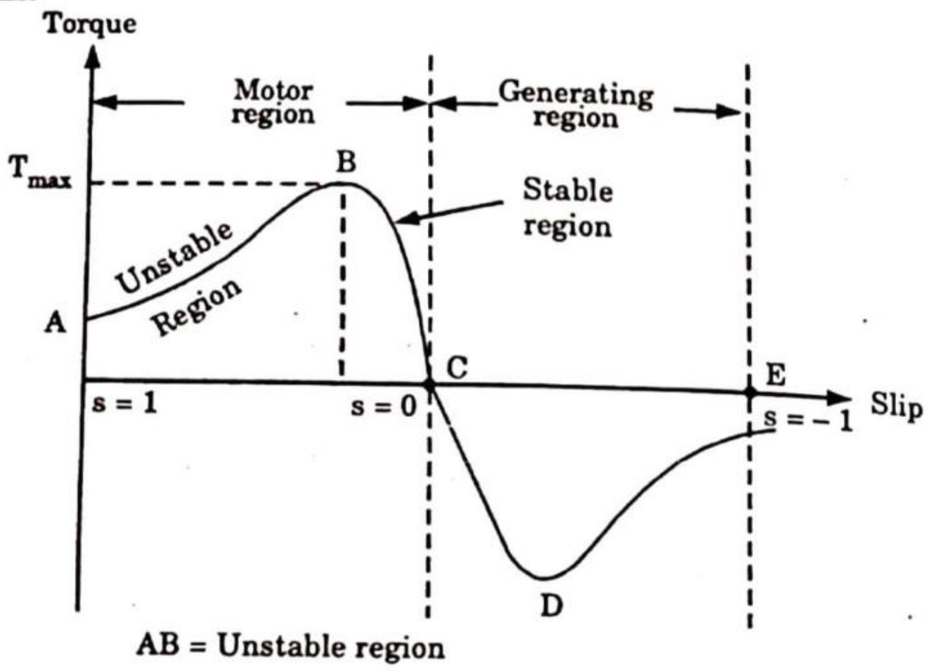

AB = Unstable region

BC = Stable region

CDE = Generating region

Fig. 4.10.1.

4.11. Write applications of single-phase induction motor.

AKTU 2014-15, Marks 02

Ans. In fans, vacuum cleaners, washing machine, kitchen equipment, centrifugal pumps, small farming appliances etc.

4.12. Name two motors used for constant speed operation.

Ans. The two motors used for constant speed operation are the DC shunt motor and the synchronous motor.

4.13. Under no load running condition of synchronous machine, what will be the angle between the induced voltage and supply voltage ?

Ans. 180°

4.14. What happens when one phase of a delta connected alternator is reversed ?

AKTU 2015-16(Sem-1), Marks 02

Ans. When one phase of a delta connected alternator is reversed, the direction of rotation of the motor is reversed.

4.15. Write the name of different types of rotor of an alternator.

Ans.

1. Salient pole rotor
2. Cylindrical rotor.

4.16. What is meant by the term speed regulation ?

AKTU 2017-18(Sem-2), Marks 02

Ans. Speed regulation means how much speed of electrical machines varies between no-load and full load. It is expressed in percent of full load speed.

4.17. Write two applications of synchronous motor.

AKTU 2016-17(Sem-2), Marks 02

Ans.

1. They are used in power house and substations in parallel to the bus bar to improve the power factor.
2. Such motors are also used to regulate the voltage at the end of transmission lines.

4.18. How will you change the direction of rotation of DC motor ?

AKTU 2013-14(Sem-1), Marks 02

Ans. Direction of rotation of a DC motor can be changed by reversing the current either through armature winding or through field coils.

☺☺☺

Scanned by TapScanner

5 UNIT

Electrical Installation (2 Marks Questions)

5.1. Define MCB ?

Ans. Miniature circuit breakers known as MCBs are mechanically operated switches cum electro-mechanically operated automatic circuit protection devices. They are used to interrupt a circuit during overload and short circuits.

5.2. Give applications and advantages of MCB.

Ans. **Applications :** MCBs are used in the protection of lights, refrigerators, Air conditioners etc. as an alternative for fuses.

Advantages :

1. Faster than fuses during short circuits.
2. MCBs can be reset after the clearance of fault.
3. Circuit isolation during maintenance is easier.

5.3. Enumerate types of ELCB.

Ans. An earth leakage circuit breaker (ELCB) detects the earth leakage current and makes the power supply off by opening the associated circuit breaker.

Types :

1. Voltage Earth Leakage Circuit Breaker
2. Current ELCB or RCCB (Residual Current Circuit Breaker).

5.4. What do you mean by moulded case circuit breaker (MCCB).

Ans. Moulded Case Circuit Breakers (MCCB) are electromechanical devices which protect a circuit from overcurrent and short circuit.

5.5. Give characteristics of MCCB.

Ans.

1. The range of rated current up to 1000 amperes.
2. Trip current may be adjusted.

5.6. Name the types of wire.

Ans.

1. Triplex wires
2. Main feeder wires

3. Panel feed wires
4. Non-metallic sheathed wires
5. Single strand wires.

5.7. What are the types of cables ?

Ans.

1. Low tension cable (LT cable)
2. Medium and high tension cable
3. Super tension cables

5.8. What are necessities of earthing ?

Ans.

1. It keeps people safe by preventing electric shocks.
2. It prevents damage to electrical appliances and devices by preventing excessive current from running through the circuit.
3. It prevents the risk of fire that could otherwise be caused by current leakage.

5.9. What are the different types of batteries ?

Ans.

1. **Primary battery :** A primary battery is a disposable kind of battery. Once used, it cannot be recharged.
   Example : Zinc-carbon batteries, Alkaline battery etc.
2. **Secondary battery :** Secondary batteries are rechargeable batteries. Once discharged, it can be recharged again.
   Example : Lead acid Battery, Lithium Batteries etc.

5.10. Enumerate important characteristics of batteries.

Ans.

1. Amps/amp-hour.
2. Capacity
3. Power
4. Power density
5. Energy density
6. Efficiency

5.11. Write formula for daily electricity consumption.

Ans. Electricity consumption$_{day}$ (kWh/day)

$$= \frac{\text{Meter reading}_{end} - \text{Meter reading}_{starting}}{\text{Days in period}}$$

☺☺☺

Scanned by TapScanner