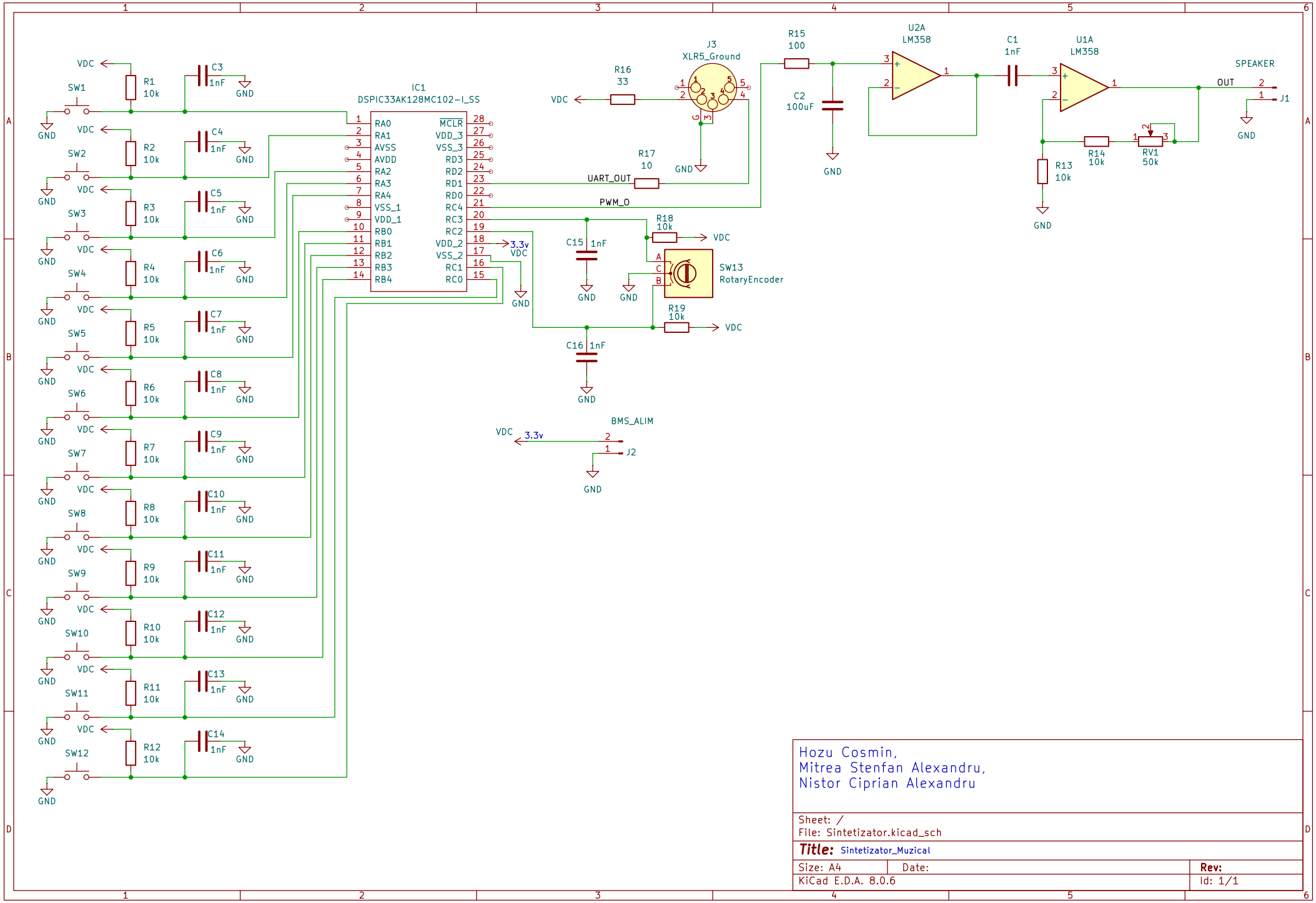

Hozu Cosmin,
Mitrea Stenfan Alexandru,
Nistor Ciprian Alexandru

Sheet: /
File: Sintetizator.kicad_sch

Title: Sintetizator_Muzical

Size: A4	Date:	Rev:
KiCad E.D.A. 8.0.6		Id: 1/1