Text

Motors

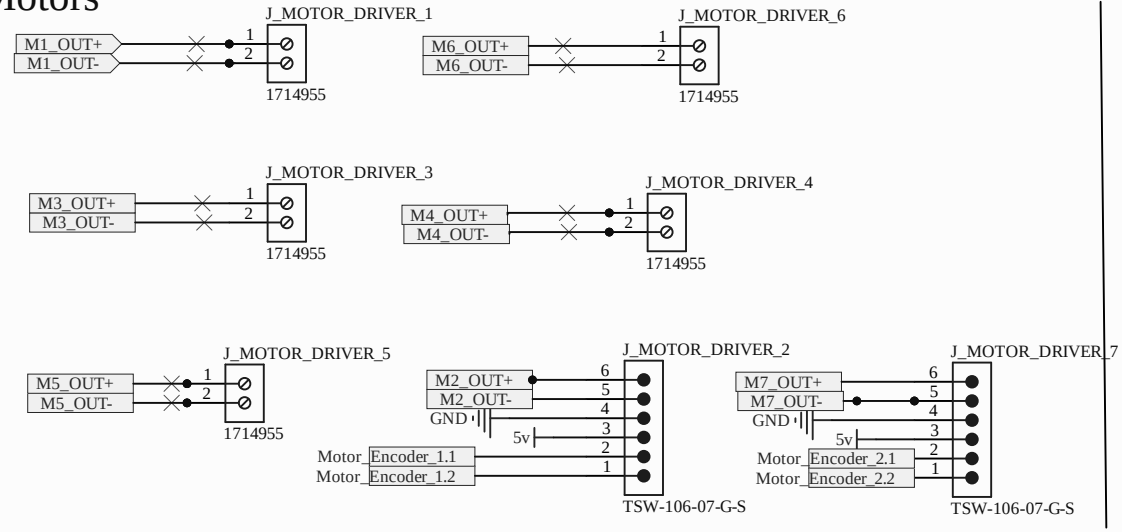

STLINK

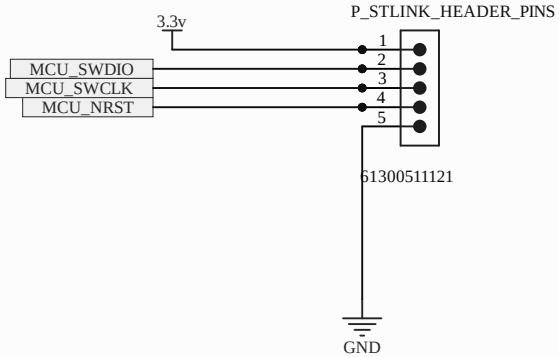

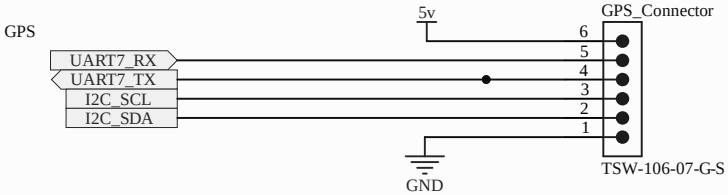

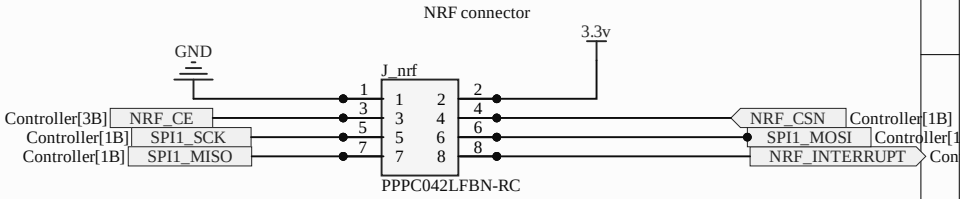

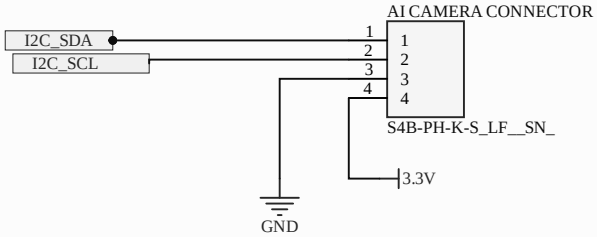

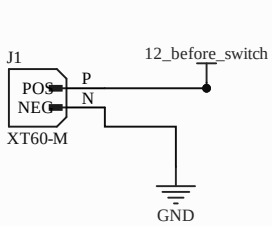

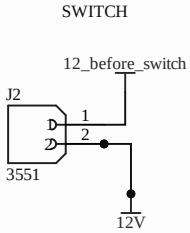

Mounting Holes

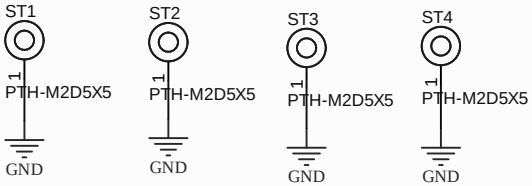

Title: *		
Size: A	Design Team: *	Revision:
Connectors for the motors, battery, gps an		
Date: 3/17/2026	Time Edited: 2:36:44 PM	Sheet 1 of 5
File: Connectors.SchDoc		

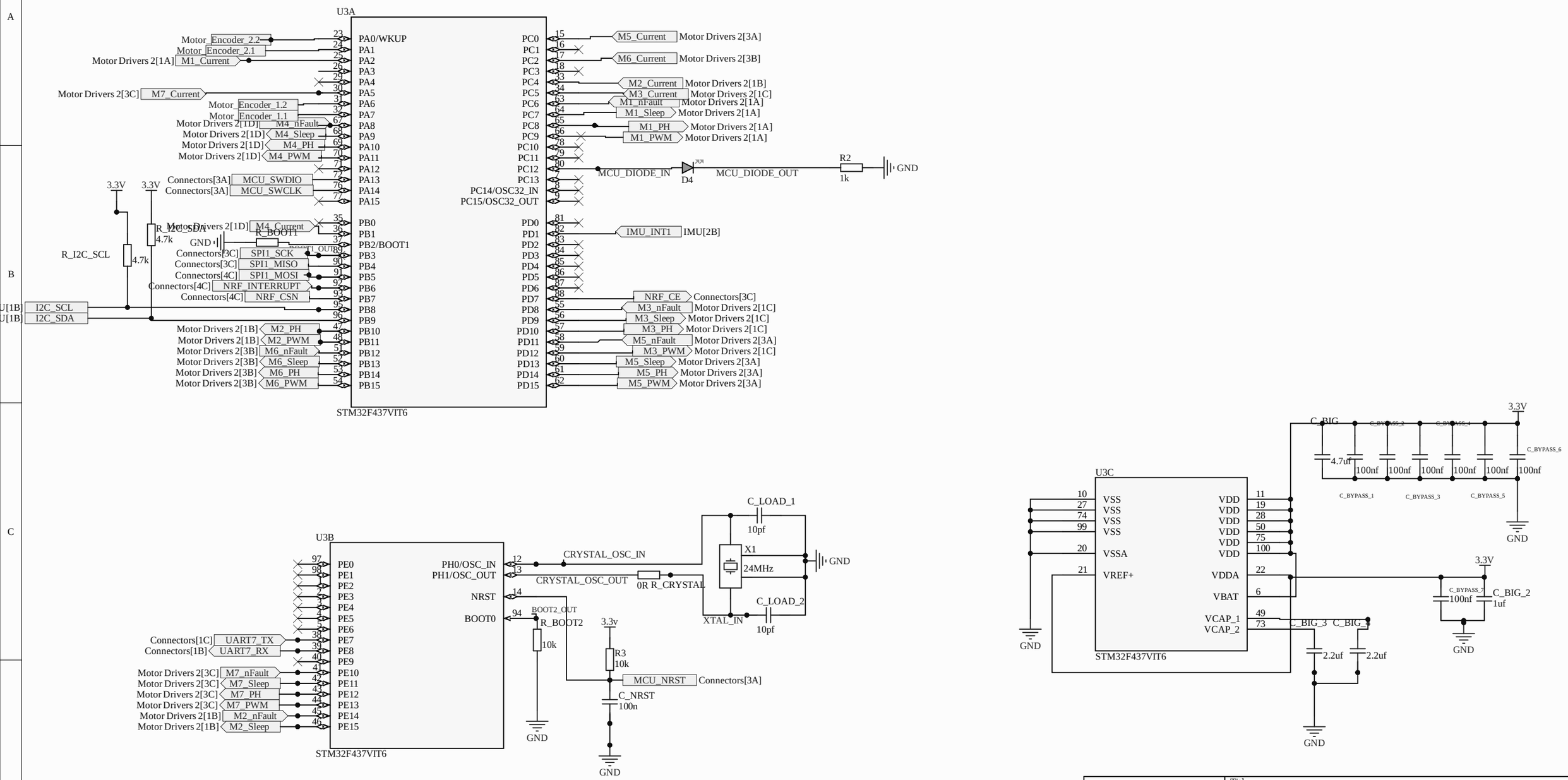

Title:	*
Size: B	Engineer: *
Revision:	*
Date: 3/17/2026	Time Edited: 2:36:44 PM
Sheet 2 of 5	
File: Controller.SchDoc	

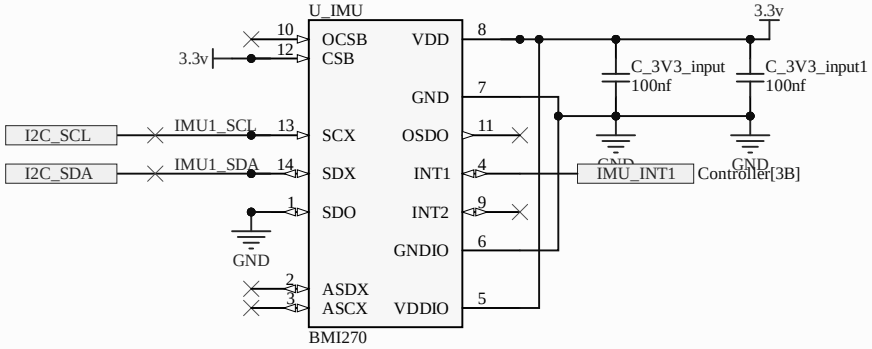

Title		
Size A	Number	Revision
Date: 3/17/2026		Sheet of
File: C:\Users\..\IMU.SchDoc		Drawn By:

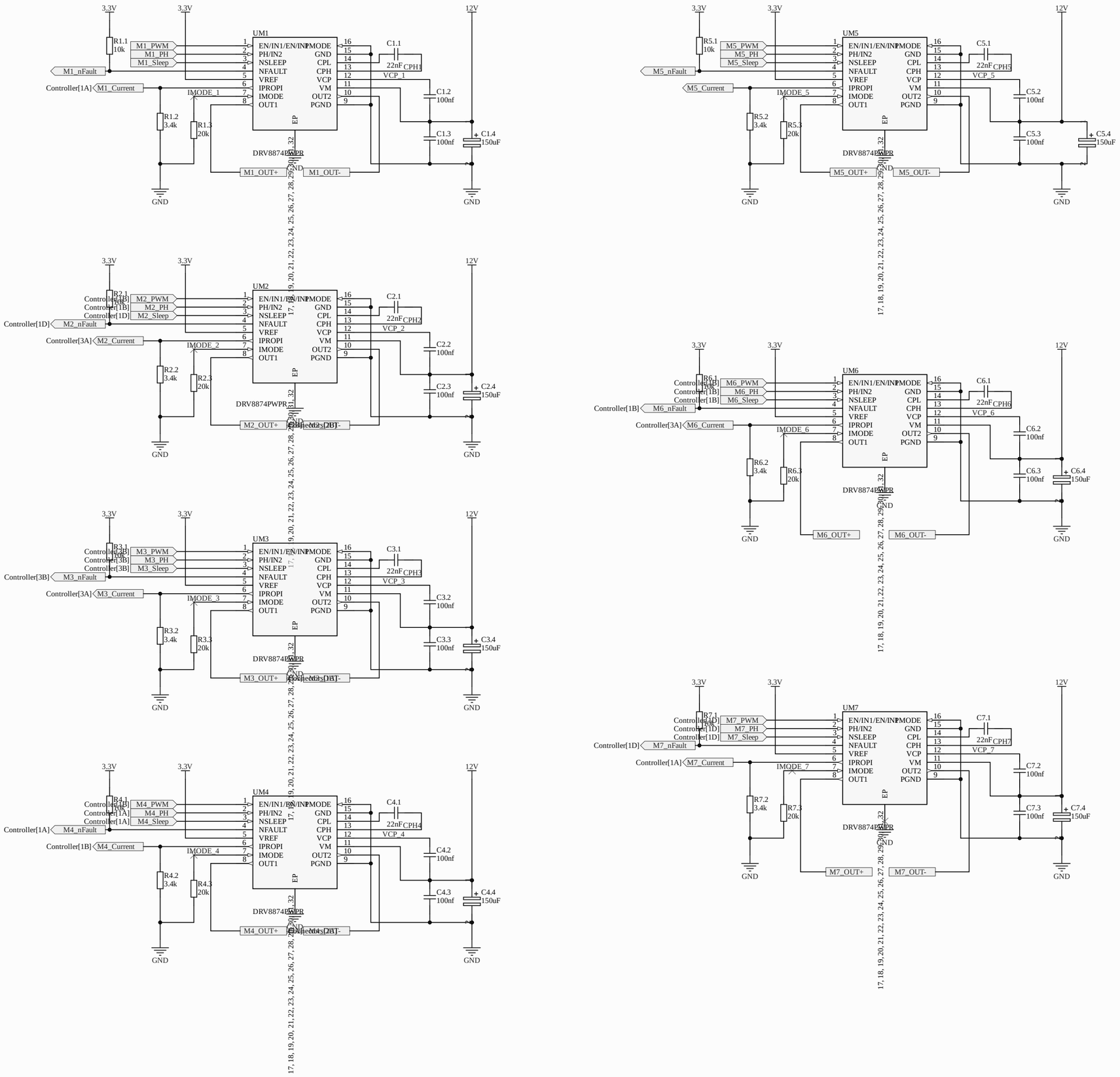

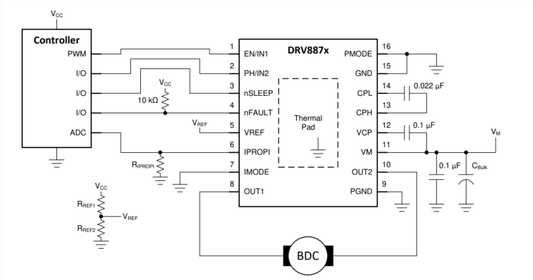

Figure 19. Typical Application Schematic

Title		
Size C	Number	Revision
Date: 3/17/2026	Sheet of	
File: C:\Users\..\Motor Drivers 2.SchDoc	Drawn By:	

12V to 5V Regulator

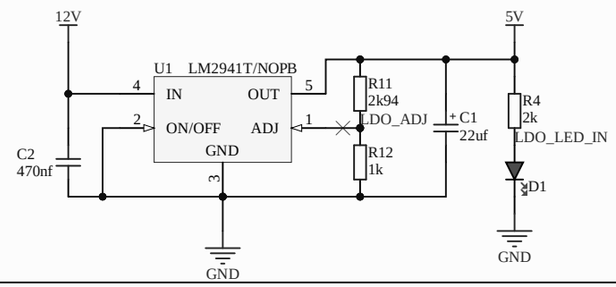

12v to 3.3v Regulator

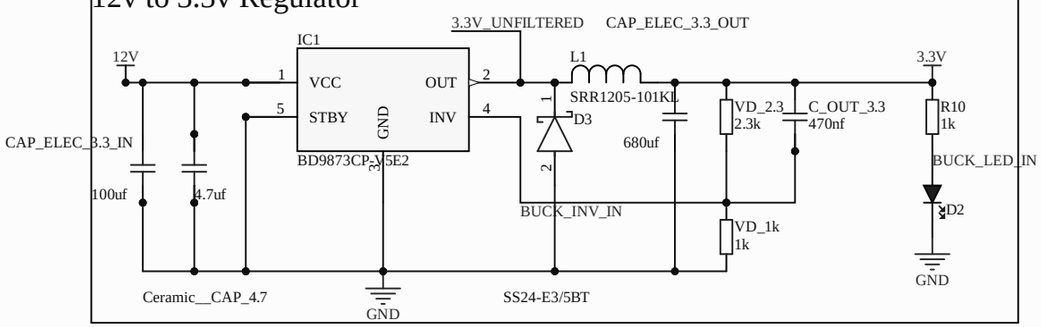

Title		
Size B	Number	Revision
Date: 3/17/2026	Sheet of	
File: C:\Users\..\voltage regulators2.SchDoc	Drawn By:	

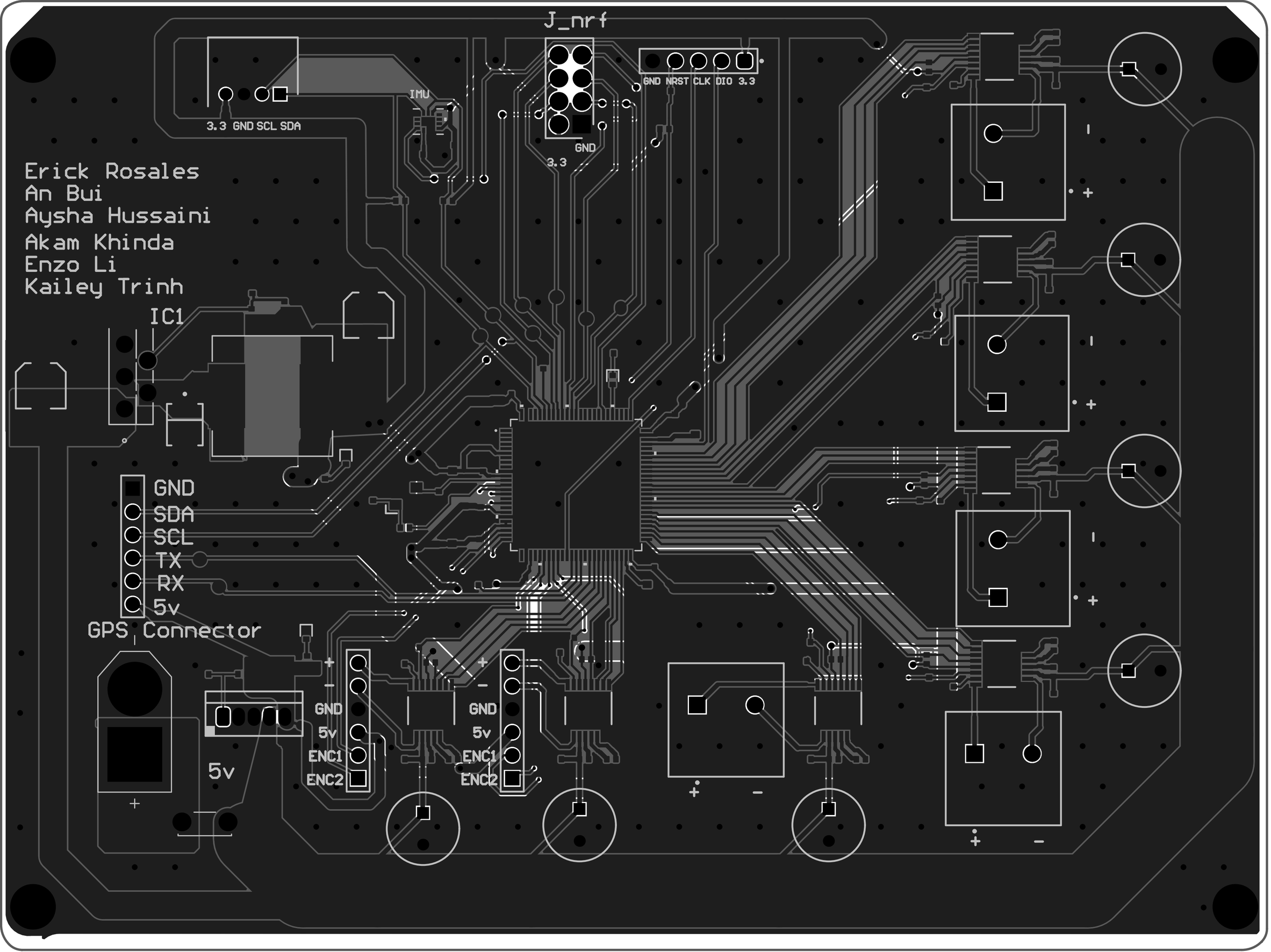
J_nrf
GND NRST CLK DIO 3.3
GND
3.3
IMU
3.3 GND SCL SDA
Erick Rosales
An Bui
Aysha Hussaini
Akam Khinda
Enzo Li
Kailey Trinh
IC1
GND
SDA
SCL
TX
RX
5v
GPS Connector
5v
GND
5v
ENC1
ENC2
GND
5v
ENC1
ENC2