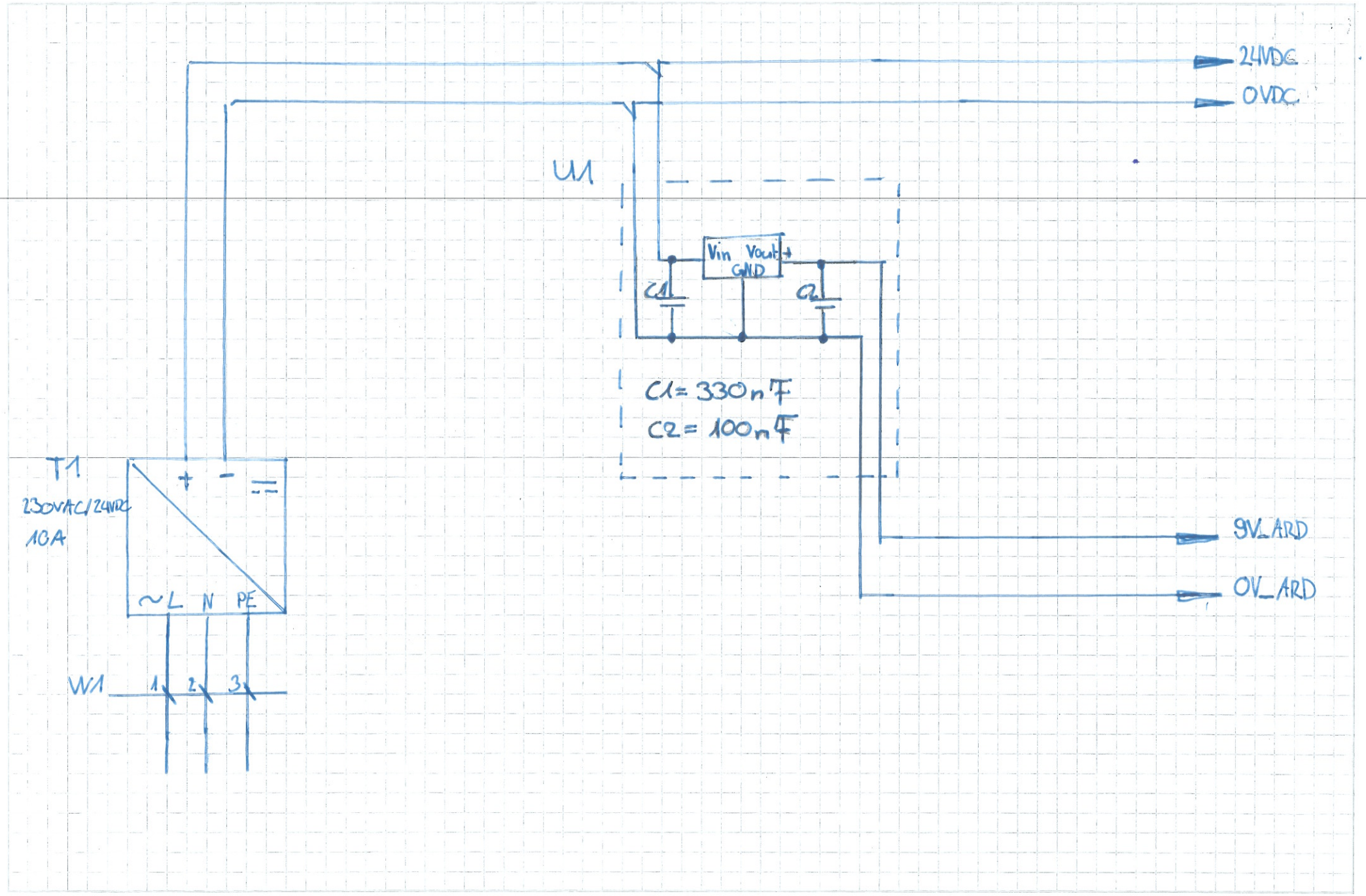
24VDC
0VDC
U1
Vin
Vout
GND
C1
C2
C1= 330nF
C2= 100nF
9V_ARD
0V_ARD
T1
230VAC/24VDC
1CA
+
-
=
~L
N
PE
W1
1
2
3

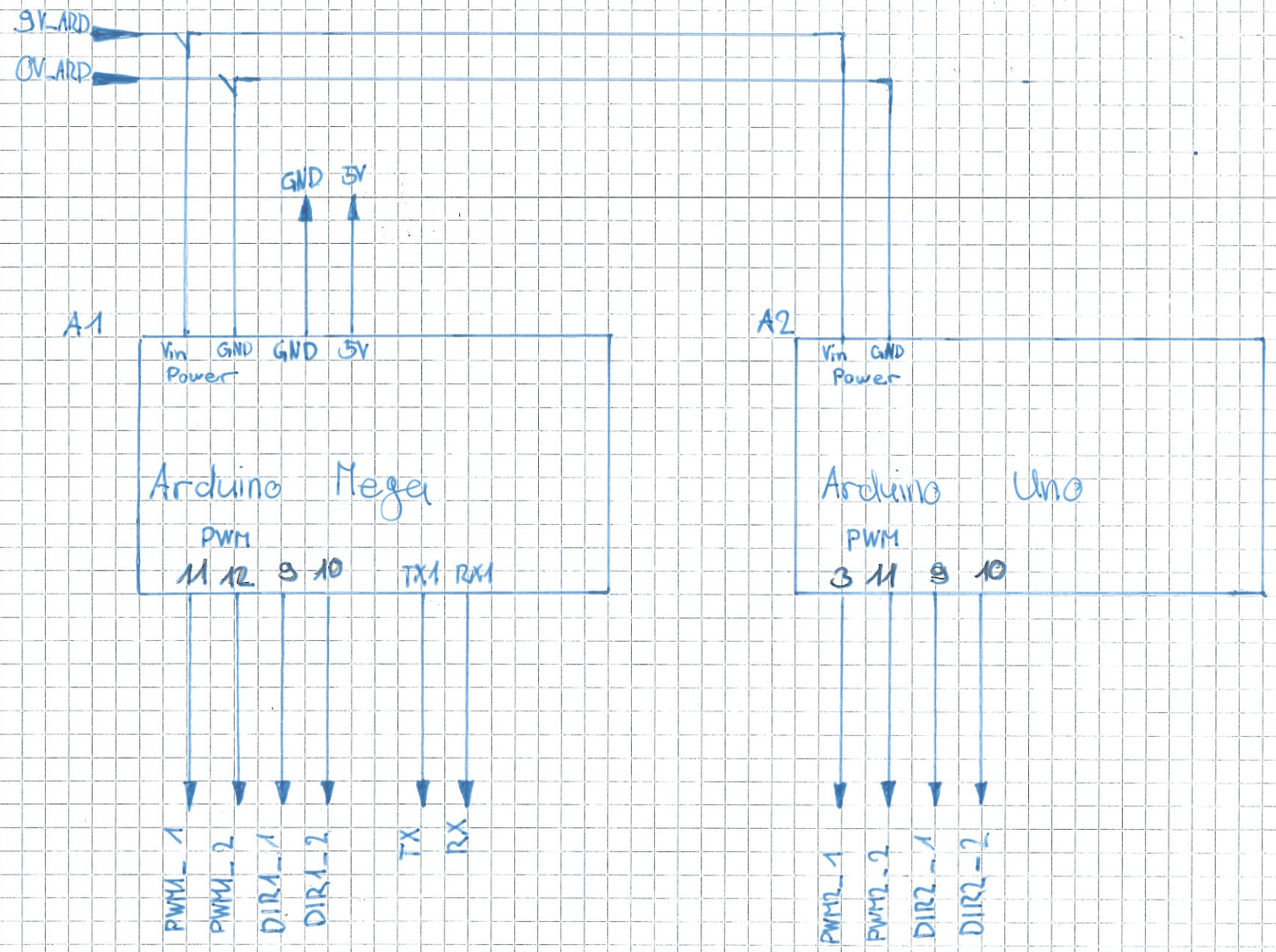
9V_ARD
0V_ARD
GND
5V
A1
Vin
Power
GND
GND
5V
Arduino Mega
PWM
11
12
9
10
TX1
RX1
PWM1_1
PWM1_2
DIR1_1
DIR1_2
TX
RX
A2
Vin
Power
GND
Arduino Uno
PWM
3
11
9
10
PWM2_1
PWM2_2
DIR2_1
DIR2_2

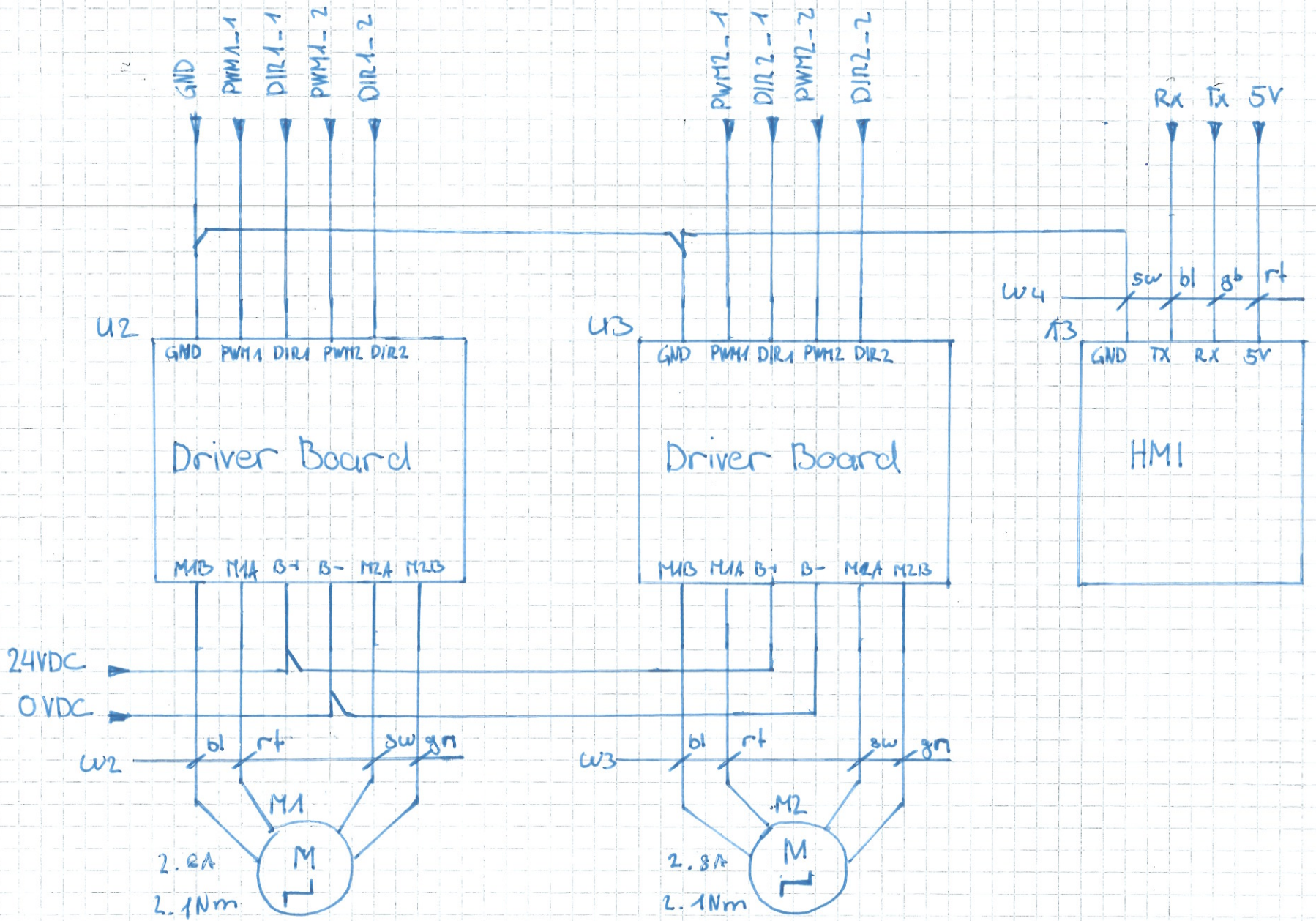
GND
PWM1_1
DIR1_1
PWM1_2
DIR1_2
PWM2_1
DIR2_1
PWM2_2
DIR2_2
Rx
Tx
5V
W4
sw
bl
gb
rt
U2
GND PWM1 DIR1 PWM2 DIR2
Driver Board
M1B M1A B+ B- M2A M2B
U3
GND PWM1 DIR1 PWM2 DIR2
Driver Board
M1B M1A B+ B- M2A M2B
A3
GND TX RX 5V
HMI
24VDC
0VDC
W2
bl
rt
sw
gn
M1
M
2.8A
2.1Nm
W3
bl
rt
sw
gn
M2
M
2.8A
2.1Nm