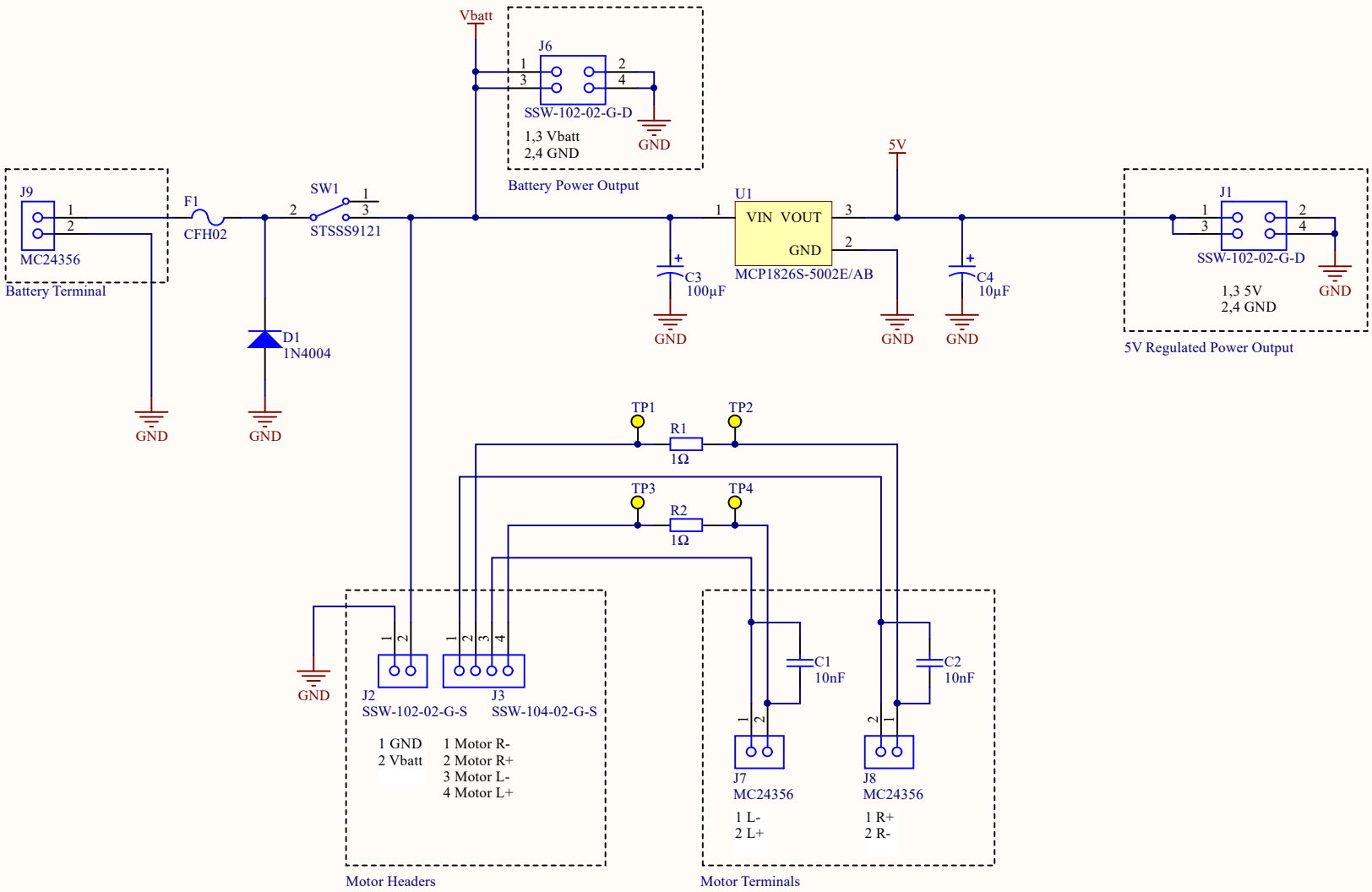

Title	EEEBug Power and Motor PCB	
Size: A4	Number: EEELAB-EEEBUG-002	Revision: 3.0
Date: 05/01/2020		Sheet 1 of 1
File: EEEBug.SchDoc		Drawn By: E STOTT