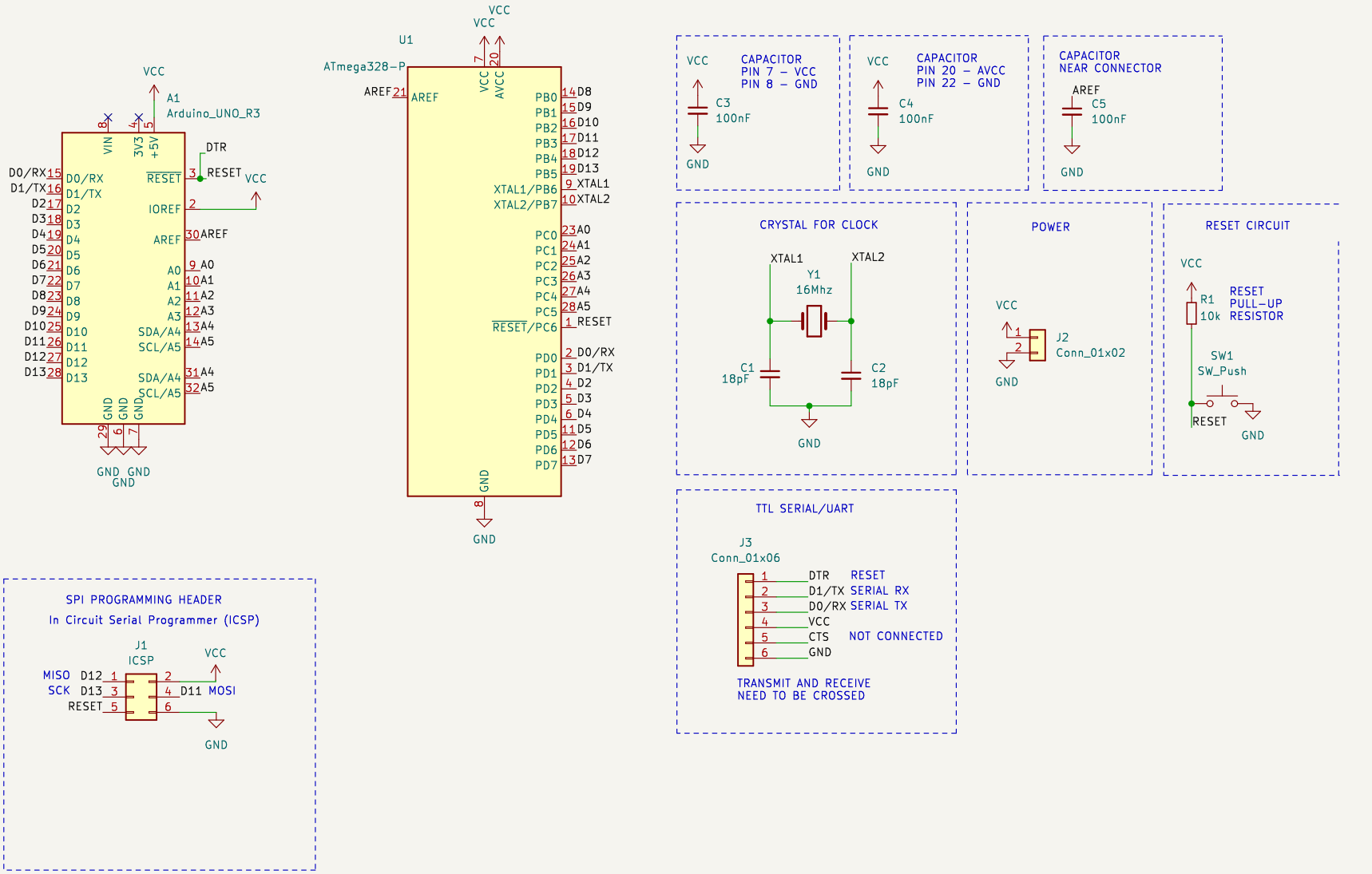

License: Creative Commons Attribution 4.0 International Public License
Open Source
Engineer: Robert Kolski
©Akerasoft 2022
Akerasoft

Sheet: /
File: AS-MULTI-UNO-11.kicad_sch

Title: AS-MULTI-UNO-11

Size: A4	Date: 2022-12-23	**Rev: V1.0**
KiCad E.D.A. kicad (6.0.6)		Id: 1/1