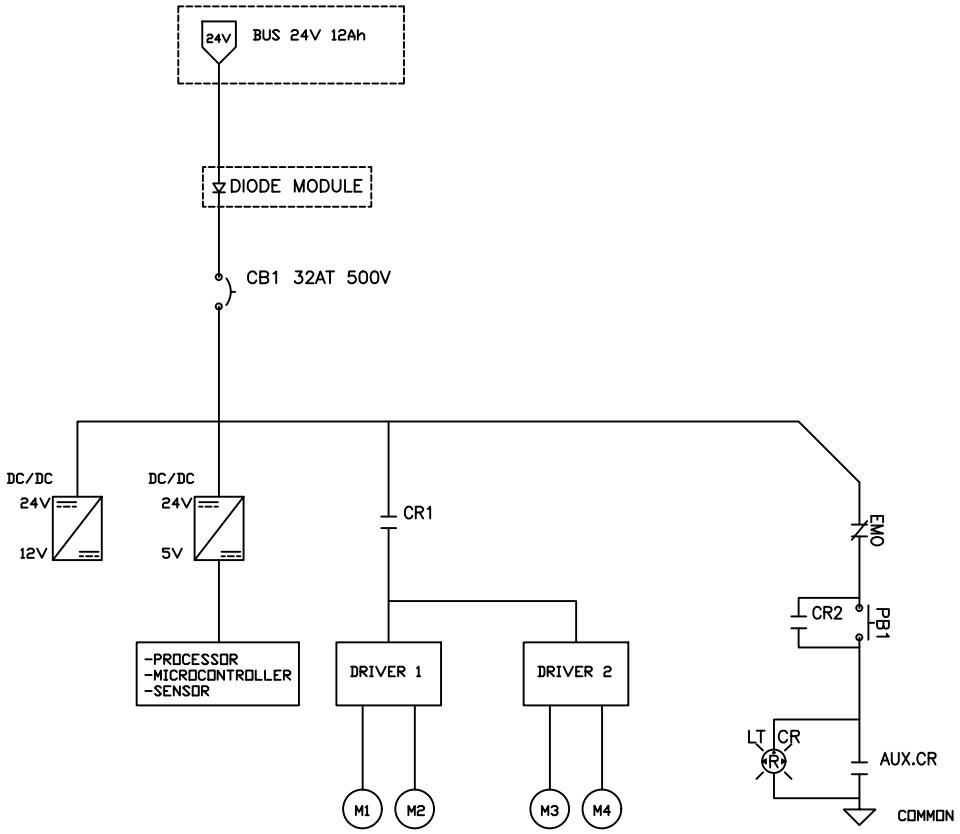

REVISIONS

Single-line diagram

SIZE	FSCM NO	DRAWING NUMBER	REV
SCALE	1:100	SHEET 1/6	

REVISIONS				

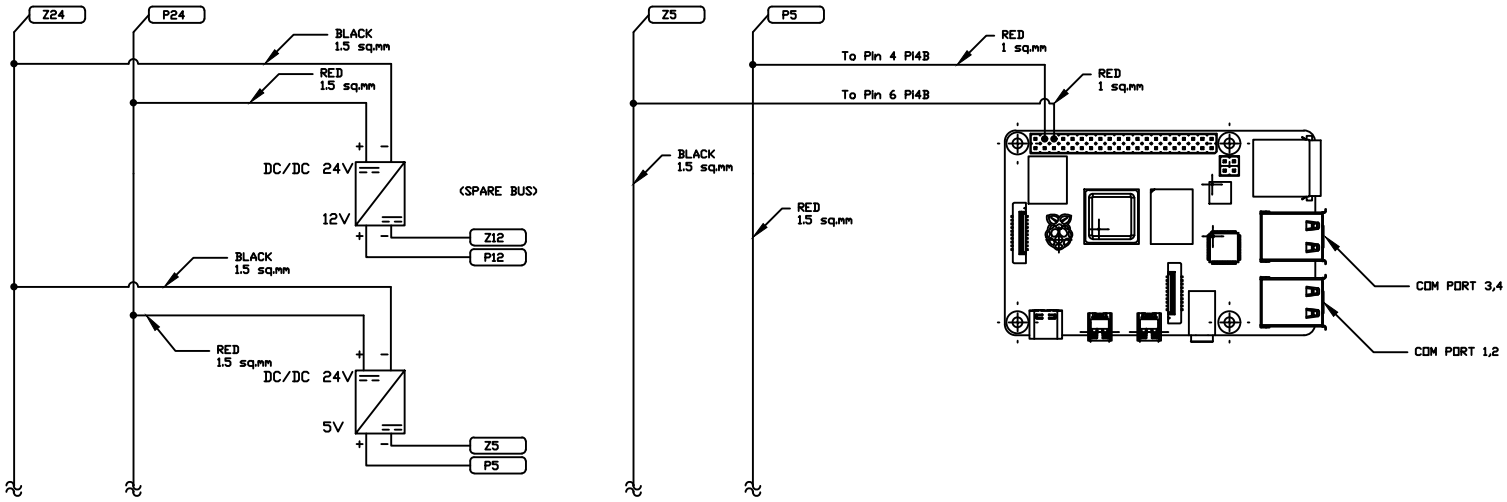

Power supply bottom layer connection

SIZE	FSCM NO	DRAWING NUMBER	REV
SCALE	1:100	SHEET 3/6	

REVISIONS				

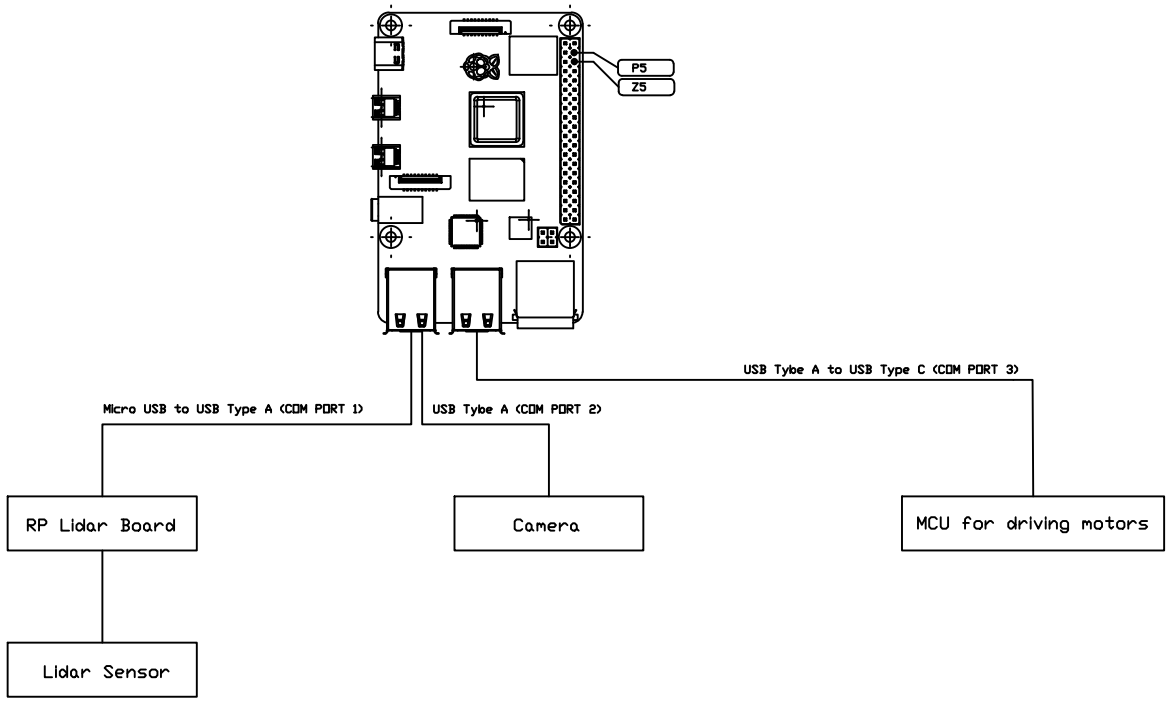

Note

Lidar , Camera and MCU receive power from Pi4.

	Pi4B connected to other modules		
SIZE	FSCM NO	DRAWING NUMBER	REV
SCALE	1:100	SHEET 4/6	

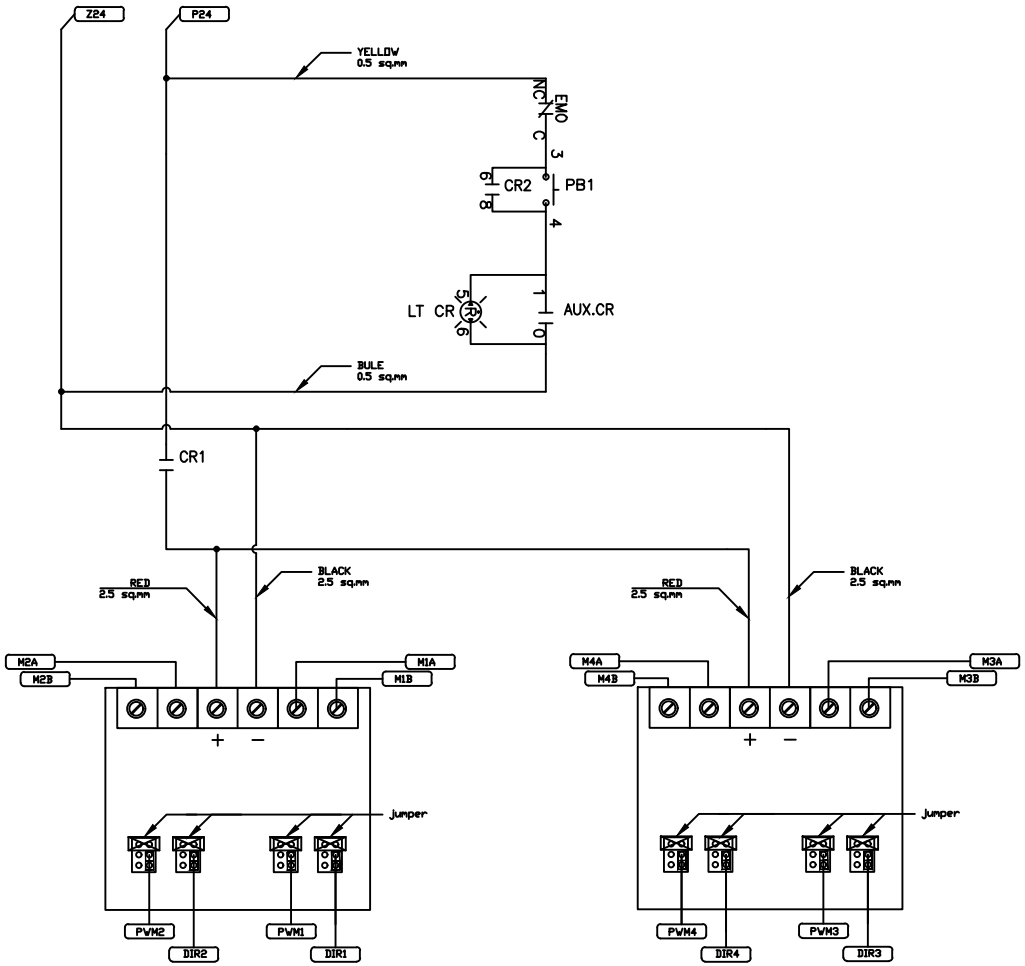

REVISIONS

Note

MxA	RED 0.5 sq.mm
MxB	BLACK 0.5 sq.mm
PWMx	ORANGE 0.5 sq.mm
DIRx	YELLOW 0.5 sq.mm

Symbol	Description
⊠	Jumper 2.54 mm.
⊟	Connector 1x2 2.54 mm.

DROVER

SIZE	FSCM NO	DRAWING NUMBER	REV
SCALE	1:100	SHEET 5/6	

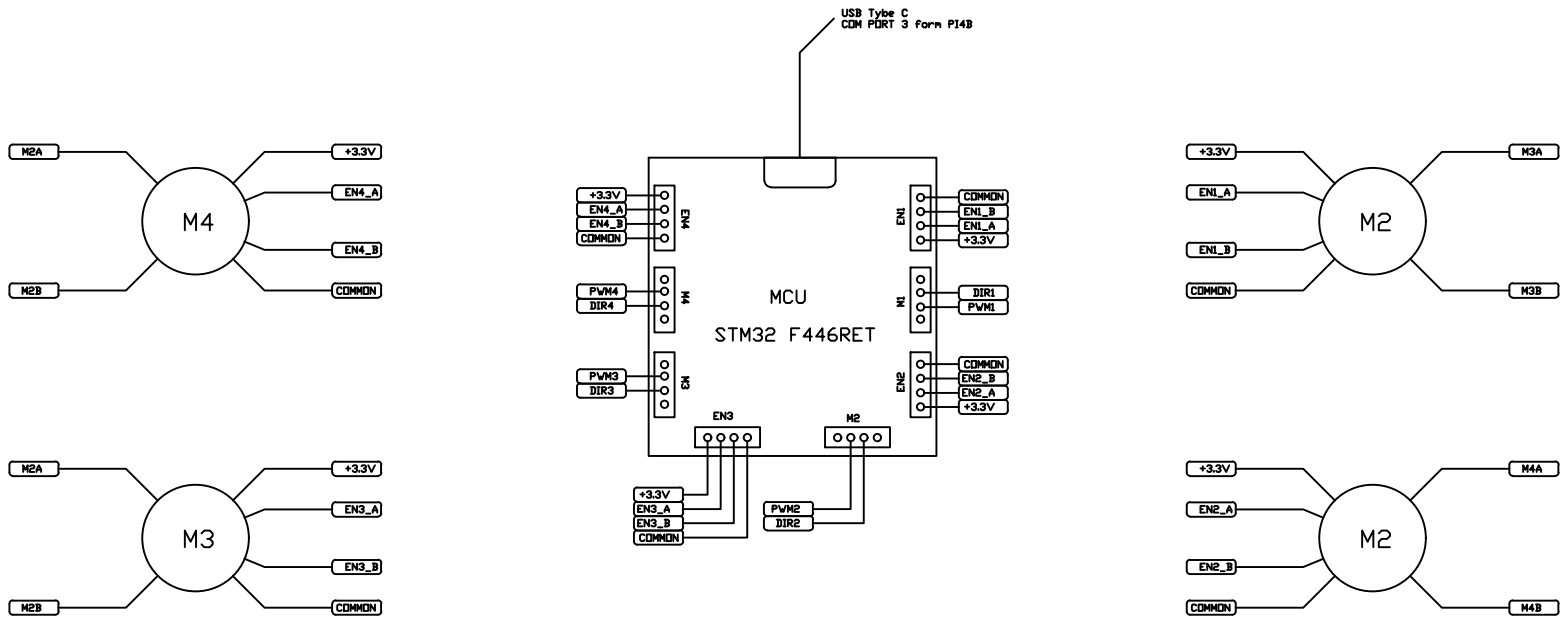

Note			
MxA	RED 2.5 sq.mm	ENx_A	GREEN 0.5 sq.mm
MxB	BLACK 2.5 sq.mm	ENx_B	WHITE 0.5 sq.mm
PWMx	ORANGE 2.5 sq.mm	+3.3V	RED 0.5 sq.mm
DIRx	YELLOW 2.5 sq.mm	COMMON	BLACK 0.5 sq.mm

Symbol	Description
M?	DC Motor 24V 100W 100Rpm

REVISIONS

MCU board connected to the motor

SIZE	FSCM NO	DRAWING NUMBER	REV
SCALE	1:100	SHEET 6/6	