Activity Table and Network Diagram

for

The Turning

version <1.0>

Prepared by

Group Number: 11

Akila Fernando	30169955	Team Lead
Abia Jahangir	30208171	Team Member
Ayre Ibrahim	30207941	Team Member
Parvathi Madhu	30174845	Team Member
Sabrina Li	30173044	Team Member

Course: ENSF 400

Instructor: Dr. Abdel Latif

Date: March 9th 2026

WBS Activity Table

WBS ID	WBS Name	Activity ID	Activity Name	Activity Desc.	Duration(Days)	Dependent On
1.1.1	Storyboard	WBS1.1.1-A1	Storyboard - Theme	Theme conceptualization	4.0	
		WBS1.1.1-A2	Storyboard - Story	Story conceptualization	4.0	WBS1.1.1-A1
1.1.2	Character Design Documents	WBS1.1.2-A1	Character Design - Names	Determine characters' names.	2.3	WBS1.1.1-A2
		WBS1.1.2-A2	Character Design - Personalities	Determine characters' personalities and motives.	4.0	WBS1.1.2-A1
		WBS1.1.2-A3	Character Design - Narrative Roles	Determine characters' roles and/or development throughout the story.	4.8	WBS1.1.2-A2
1.1.3	Dialogue Scripts	WBS1.1.3-A1	Dialogue Scripts - Beginning	Write narration/main character scripts to solidify the direction of the story. This includes the beginning of the story and the initial world building that follows.	5.2	WBS1.1.2-A1
		WBS1.1.3-A2	Dialogue Scripts - Characters	Write scripts for the interactions between the main character and each of the supporting characters.	5.2	WBS1.1.2-A2
		WBS1.1.3-A3	Dialogue Scripts - Conditional Paths	Establish conditional dialogue pathways based on what the main character has chosen to talk about with each supporting character.	6.0	WBS1.1.2-A3
		WBS1.1.3-A4	Dialogue Scripts - Graphs	Create dialogue graphs for the interactions between the main character and each of the	8.7	WBS1.1.3-A2 WBS1.1.3-A3

			supporting characters. These will visualize the logic of the game.		
	WBS1.1.3-A5	Dialogue Scripts - Ending	Write narration/main character scripts to conclude the story. This includes the results of the decisions the main character has made.	9	
d1.2.1 UI Design	WBS1.2.1-A1	UI Design - Theme	Conceptualize the visual theme of the game. This takes into account story elements like theme, mood, setting, etc. This includes colours, shapes, textures, etc.	5.0	WBS1.1.1-A2
	WBS1.2.1-A2	UI Design - Visuals	Conceptualize the visual design of the user interface. This includes design for the main menu, new game creation menu, in-game menu, settings, in-game narration, in-game conversation, and in-game dialogue options.	3.8	WBS1.2.1-A1
	WBS1.2.1-A3	UI Design - Assets	Create the visual assets for each interface.	3.8	WBS1.2.1-A2
1.2.2 Voice Effects	WBS1.2.2-A1	Voice Effects	Search and select non-copyright sound effects for text that will show up on the screen.	2.0	WBS1.1.3-A1
1.2.3 Character Artwork	WBS1.2.3-A1	Character Artwork	Create artwork for each character based on the character design documents.	5.8	WBS1.1.2-A3
1.2.4 Background Music	WBS1.2.4-A1	Background Music - Theme	Conceptualize the auditory theme of the game. This takes into	6.2	WBS1.1.1-A2

			account story elements like theme, mood, setting, etc. This includes rhythm, tempo, melody, etc.		
	WBS1.2.4-A2	Background Music - Select BGM	Search and select non-copyright music that matches the chosen theme.	1.8	WBS1.2.4-A1
	WBS1.2.4-A3	Background Music - Select Story SFX	Search and select non-copyright sound effects for enhancing story telling.	1.8	WBS1.2.4-A2
	WBS1.2.4-A4	Background Music - Select UI SFX	Search and select non-copyright sound effects for interacting with UI elements.	1.8	WBS1.2.4-A3
1.3.1 Unity Project Folder	WBS1.3.1-A1	Unity Project Folder	Organize and package all game assets and scripts into a single exportable folder for users to download.	3.0	WBS1.1.3-A4, WBS1.2.1-A3, WBS1.2.3-A1, WBS1.2.4-A4 WBS1.2.2-A1
1.4.1 LLM API Integration Module	WBS1.4.1-A1	LLM API Integration Module - LLM Comparison	Compare different LLMs and decide which is best for our use.	5.8	WBS1.3.1-A1
	WBS1.4.1-A2	LLM API Integration Module -API Key	Obtain an API key for the selected LLM.	3.2	WBS1.4.1-A1
	WBS1.4.1-A3	LLM API Integration Module - API Calls	Implement secure API calls in the game. This includes authentication and request handling.	3.2	WBS1.4.1-A2
1.4.2.1 Prompt Template	WBS1.4.2.1-A1	Prompt Template - Characters	Create prompt templates for each character. This includes details about their personality,	5.3	WBS1.1.3-A3

			narrative context, and dialogue constraints.		
	WBS1.4.2.1-A2	Prompt Template - Generate	Generate the character dialogue through API calls using few-shot or chain-of-thought prompting.	7.7	WBS1.4.2.1-A1
1.4.2.2 Response Processor	WBS1.4.2.2-A1	Response Processor - Parse Dialogue	Create a script that reliably parses LLM responses for in-game display.	4.7	WBS1.4.2.1-A2
	WBS1.4.2.2-A2	Response Processor - Game Integration	Create a script for integrating processed LLM responses into the game, so that they can be displayed.	5.3	WBS1.4.2.2-A1
1.4.3 Context Memory Manager	WBS1.4.3-A1	Context Memory Manager - Separation	Divide LLM prompts into pre-prompted/stored and runtime-prompted.	4.8	WBS1.4.2.2-A2
	WBS1.4.3-A2	Context Memory Manager - LangChain	Use LangChain to help manage context for the LLM.	3.0	WBS1.4.3-A1
1.5.1 Game State Controller	WBS1.5.1-A1	Game State Controller - Scripts	Create scripts to control the game state.	4.0	WBS1.3.1-A1
	WBS1.5.1-A2	Game State Controller - Choice Integration	Integrate game state controllers with the choice tracking system.	1.2	WBS1.5.1-A1
1.5.2 Choice Tracking System	WBS1.5.2-A1	Choice Tracking System - Gameplay Conditions	Determine logical gameplay conditions that lead to dialogue branches.	4.2	WBS1.1.3-A4
	WBS1.5.2-A2	Choice Tracking System - Implementation	Implement the decided conditions within the game.	4.8	WBS1.5.2-A1
1.5.3.1 Save System	WBS1.5.3.1-A1	Save System	Save game state in local Appdata using the Unity built-in save system.	1.2	WBS1.5.1-A1

1.5.3.2 Load System	WBS1.5.3.2-A1	Load System	Load game state from local Appdata using the Unity built-in save system.	1.2	WBS1.5.3.1-A1
1.6.1 Menus	WBS1.6.1-A1	Menus - Implementation	Implement menus to be used within the game. This is based on the UI design created for them.	1.2	WBS1.2.1-A3
	WBS1.6.1-A2	Menus - Game State	Create scripts to detect player input and change the game state accordingly. This is for interacting with menus.	1.3	WBS1.6.1-A1
1.6.2 Chat Display	WBS1.6.2-A1	Chat Display	Implement the chat interface to visually display dialogue between characters. This is based on the UI design created for it.	1.2	WBS1.2.1-A3
1.6.3 Player Input Display	WBS1.6.3-A1	Player Input Display - Implementation	Implement the interface for selecting player responses. This is based on the UI design created for it.	1.2	WBS1.2.1-A3
	WBS1.6.3-A2	Player Input Display - Game State	Create scripts to detect player input and change the game state accordingly. This is for interacting with player responses.	5.0	WBS1.6.3-A1
1.7.1.1 System Architecture Document	WBS1.7.1.1-A1	System Architecture Document - UML Diagrams	Design UML class diagram to include relevant classes created in C# scripts.	3.0	WBS1.4.3-A2 WBS1.5.3-A1 WBS1.5.1-A2 WBS1.5.2-A2 WBS1.6.1-A2 WBS1.6.2-A1 WBS1.6.3-A2 WBS1.7.1.2-A1
	WBS1.7.1.1-A2	System Architecture Document - State	Create the state transition diagram describing	1.2	WBS1.4.3-A2 WBS1.5.3-A1 WBS1.5.1-A2

		Transition Diagrams	overarching game states such as in-menu, in-game, etc.		WBS1.5.2-A2 WBS1.6.1-A2 WBS1.6.2-A1 WBS1.6.3-A2 WBS1.7.1.2-A1
1.7.1.2 API Document	WBS1.7.1.2-A1	API Document - Usage	Create an organized document to detail API usage.	2.0	WBS1.4.1-A3
	WBS1.7.1.2-A2	API Document - Endpoints	Describe the process to implement the API endpoints, request/response formats, and integration procedures.	2.0	WBS1.7.1.2-A1
1.7.1.3 Version Control System	WBS1.7.1.3-A1	Version Control System - GitHub	During development, track all code changes using GitHub.	7.0	WBS1.7.1.1-A1 WBS1.7.1.1-A2
	WBS1.7.1.3-A2	Version Control System - Google Docs	During development, track all potential and real design changes using Google Docs.	4.0	WBS1.7.1.1-A1 WBS1.7.1.1-A2
1.7.2.1 Installation & Setup Guide	WBS1.7.2.1-A1	Installation & Setup Guide - Download Process	Describe the installation process. This includes how to download all needed files for the game to function.	1.2	WBS1.7.1.3-A1 WBS1.7.1.3-A2
	WBS1.7.2.1-A2	Installation & Setup Guide - Troubleshooting	Describe some troubleshooting advice in case of some common errors.	1.2	WBS1.7.1.3-A1 WBS1.7.1.3-A2
	WBS1.7.2.1-A3	Installation & Setup Guide - Configuration	Describe instructions to configure and run the game. This includes how to run the game's executable file, how to adjust settings, how to turn off additional LLM generation, and how to save and load a game.	1.2	WBS1.7.1.3-A1 WBS1.7.1.3-A2

1.7.2.2	Player Guide	WBS1.7.2.2-A1	Player Guide	Create a document explaining gameplay goals, mechanics, and controls. This will be a user manual players can refer to for playing the game.	3.2	WBS1.7.1.3-A1 WBS1.7.1.3-A2

Network Diagram

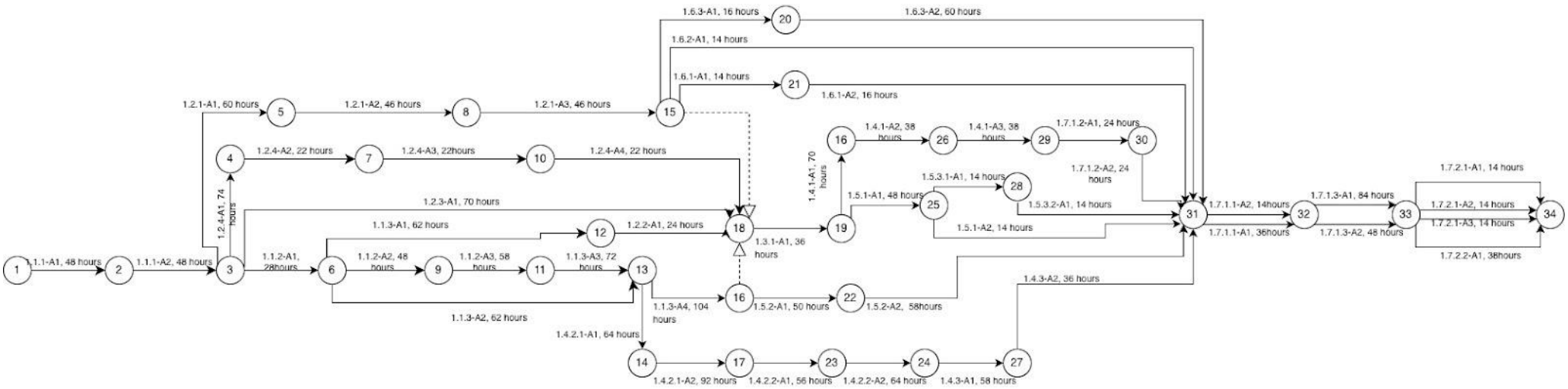

Critical Path: 1 - 2 - 3 - 6 - 9 - 11 - 13 - 14 - 17 - 23 - 24 - 27 - 31 - 32 - 33 - 34

Total Project Duration = 730 hours ≈ 30 days