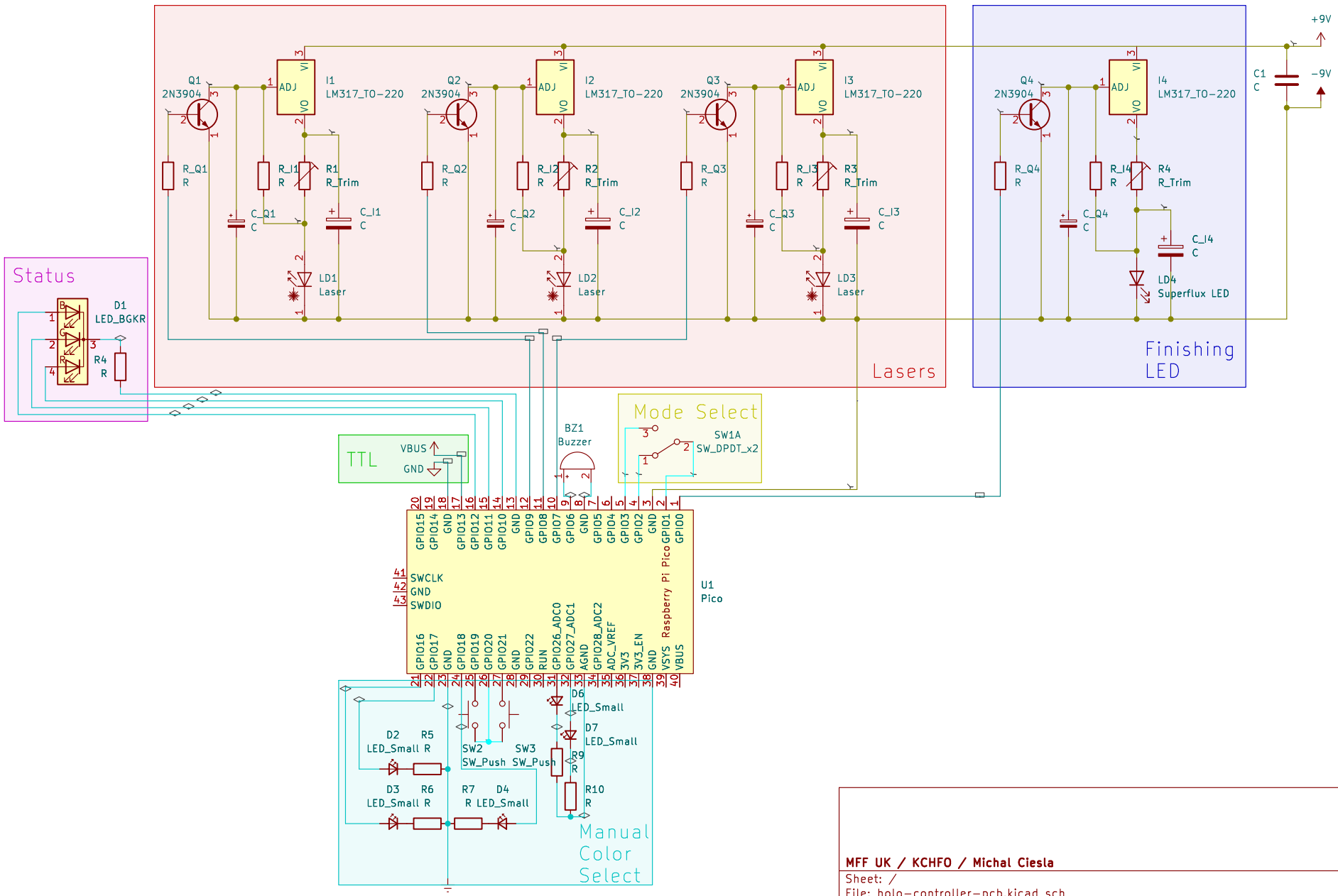

MFF UK / KCHFO / Michal Ciesla

Sheet: /

File: holo-controller-pcb.kicad_sch

Title: Holographic Laser Exposure Controller

Size: A4	Date: 2023-10-08	Rev: 2
KiCad E.D.A. kicad 7.0.6		Id: 1/1