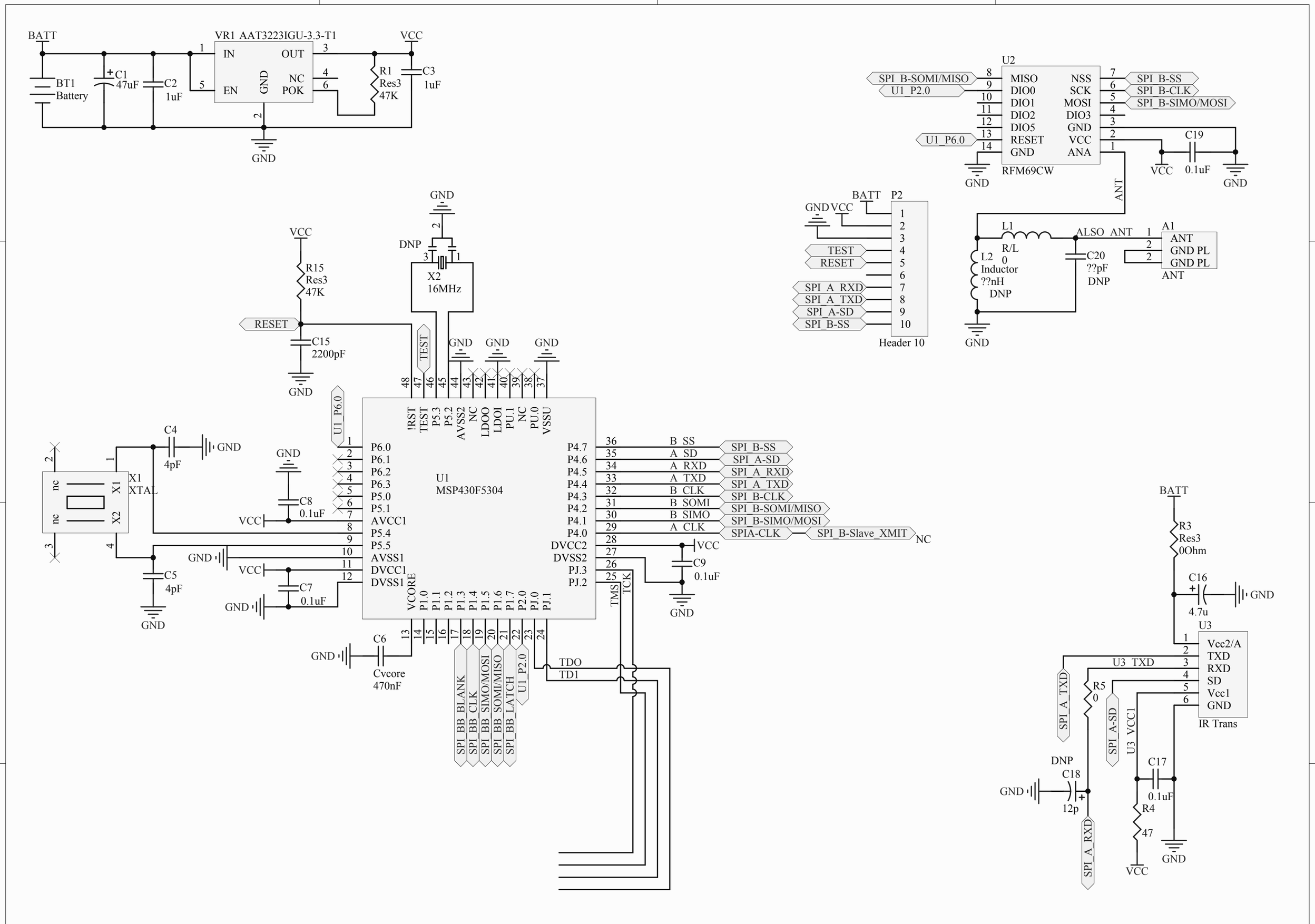

Title *QC11 MCU and Comms*			*QC11*
Size: Letter	Number:*	Revision:C	*
Date: 6/16/2014	Time: 10:25:27 PM	Sheet 1 of 2	*
File: D:\Documents\My Dropbox\QC11\QC11 (1-16-2014 5-35-22 PM)\Main C0.SchDoc			*

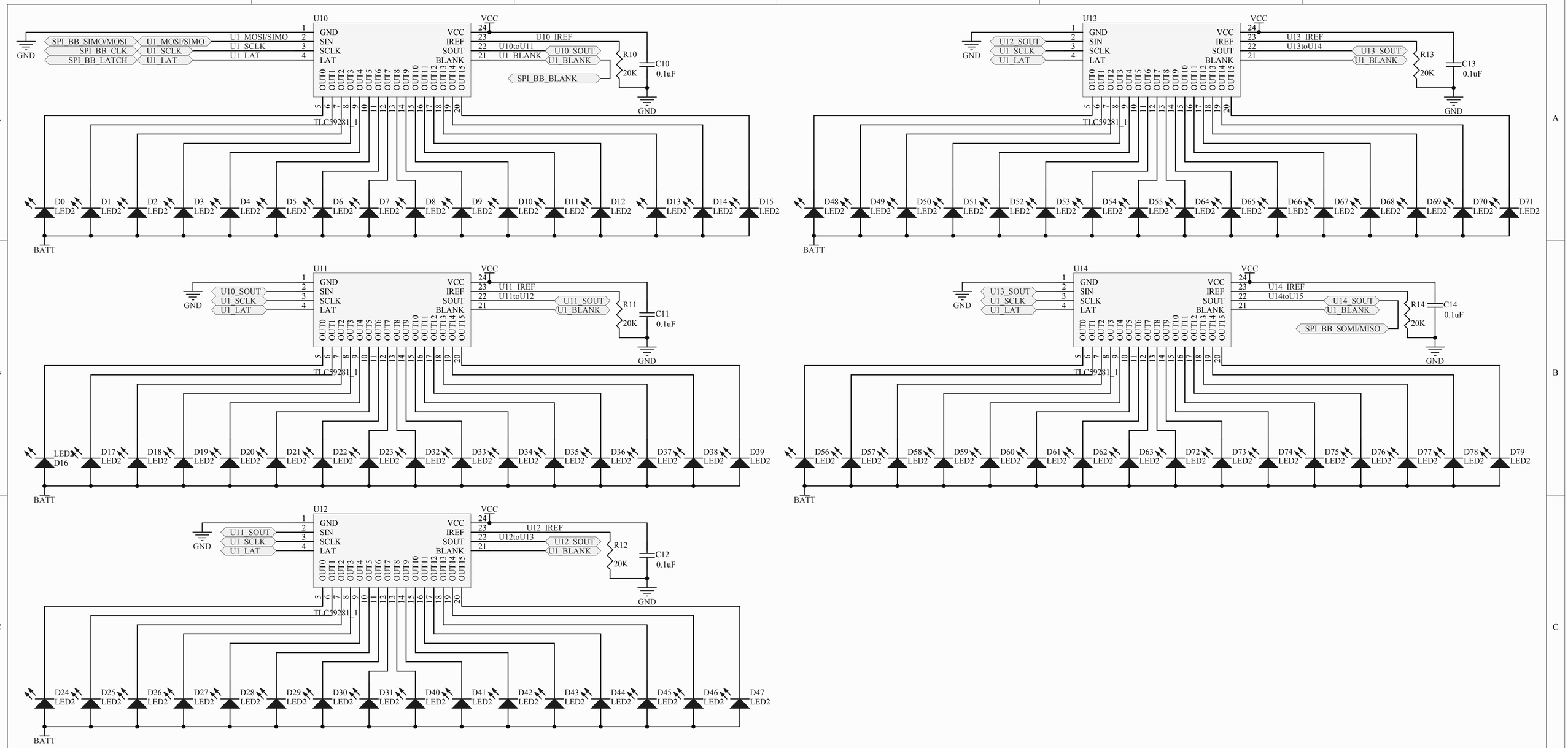

Title	*QC11 LEDs and Controllers*		*
Size: Tabloid	Number:*	Revision:A	*
Date: 6/16/2014	Time: 10:25:27 PM	Sheet 2 of 2	*
File: D:\Documents\My Dropbox\QC11\QC11 (1-16-2014 5-35-22 PM)\LEDs A0.SchDoc			*