Golden Dome - ESP32-CAM laser targeting system

Abstract:

This project presents an ESP32-CAM based defense prototype for real-time threat detection and tracking. A live video stream is sent to a FastAPI server, where a red ball(missile prototype) is detected using computer vision.The target coordinates are calculated and angle of interception is sent to servo motors(2-axis servo bracket) , which aims a laser towards the object.The system demonstrates a low-cost smart surveillance and defense model using AI-based IoT.

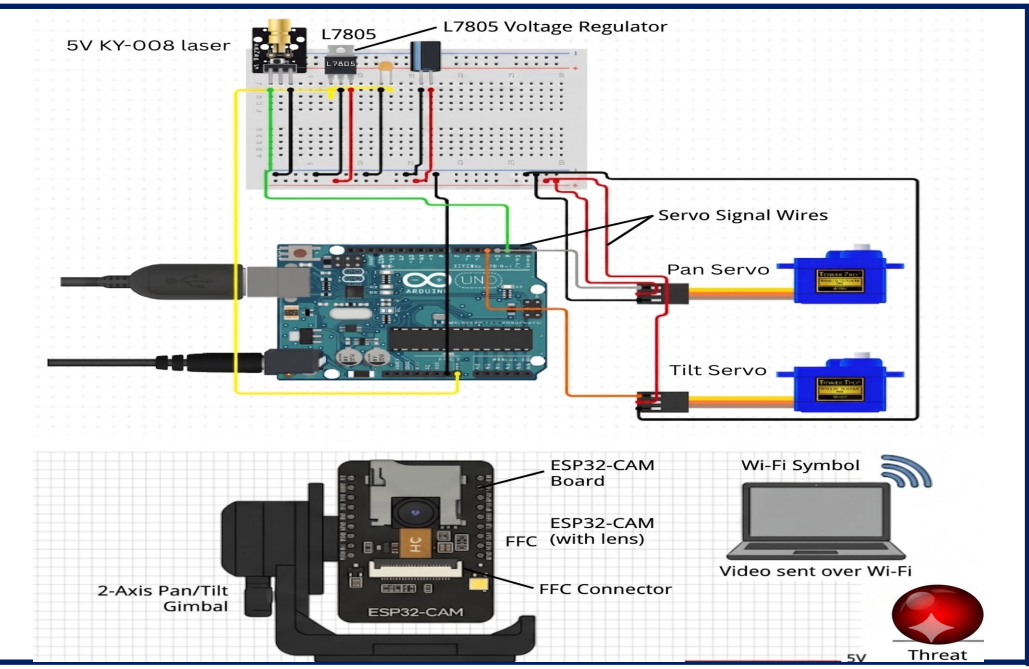

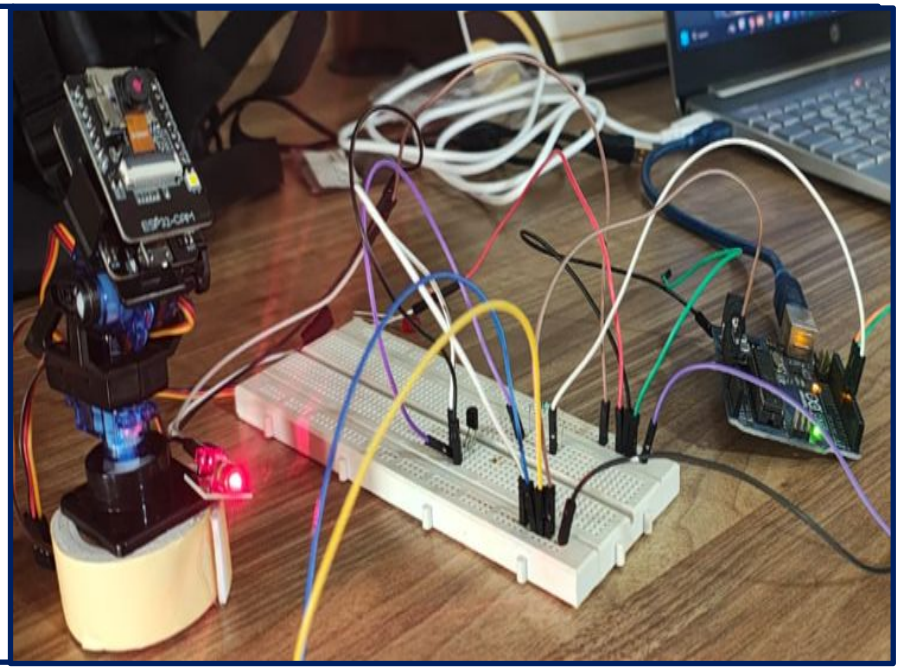

Nisarg Ravi
PES1UG25CS901

Akshat Sharma
PES1UG24CS042

N Ram Sai Govind
PES1UG24CS912

Amartya Sinha
PES1UG24CS051

PROF. V R BADRI PRASAD