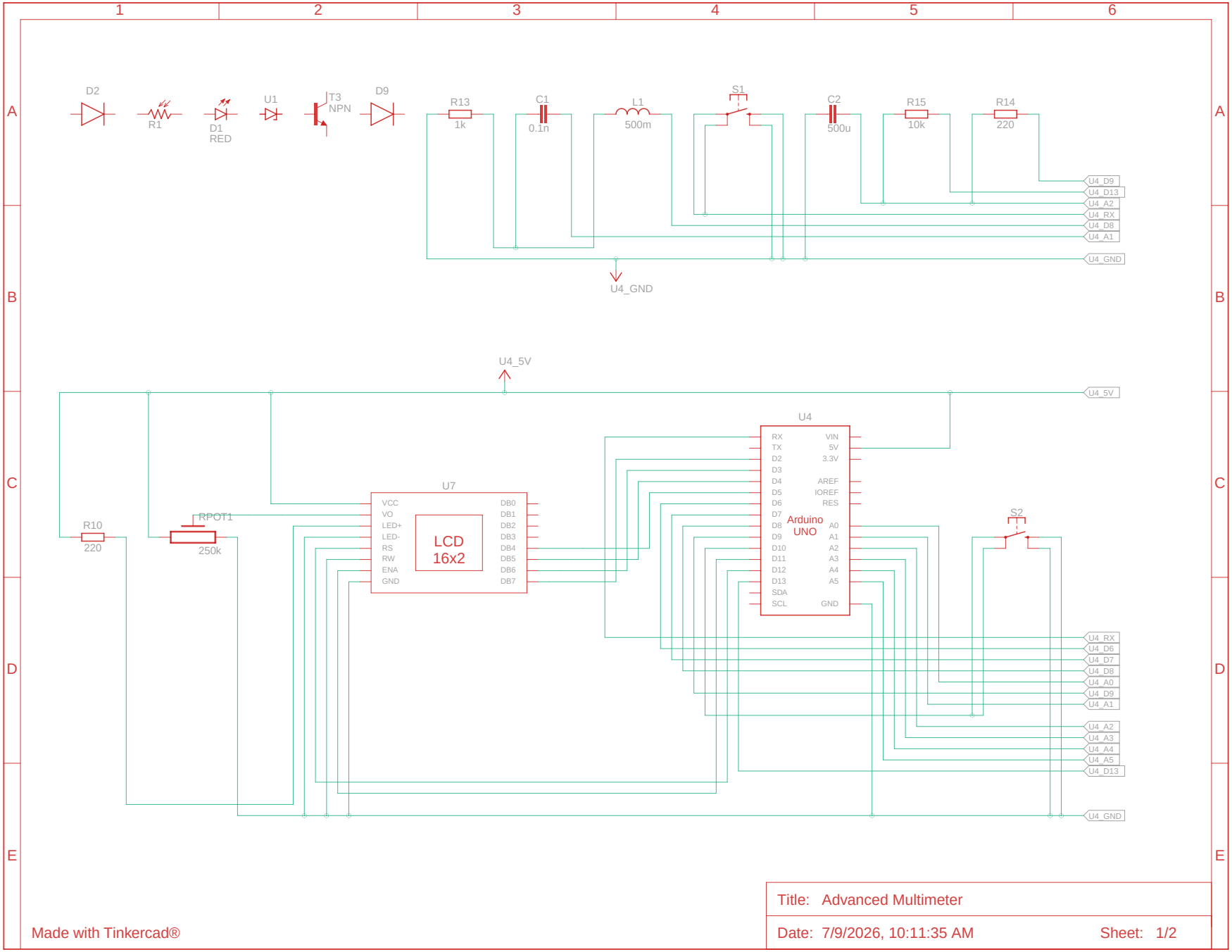

Made with Tinkercad®

Title: Advanced Multimeter

Date: 7/9/2026, 10:11:35 AM

Sheet: 1/2

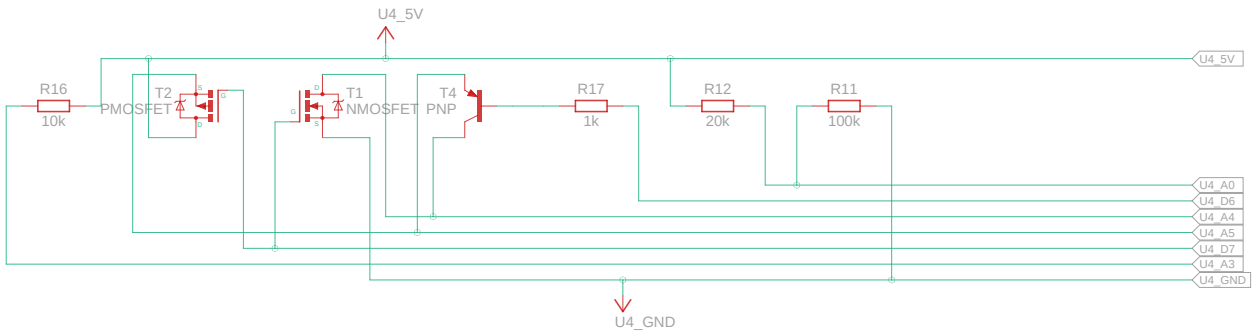

Made with Tinkercad®

Title: Advanced Multimeter	
Date: 7/9/2026, 10:11:35 AM	Sheet: 2/2