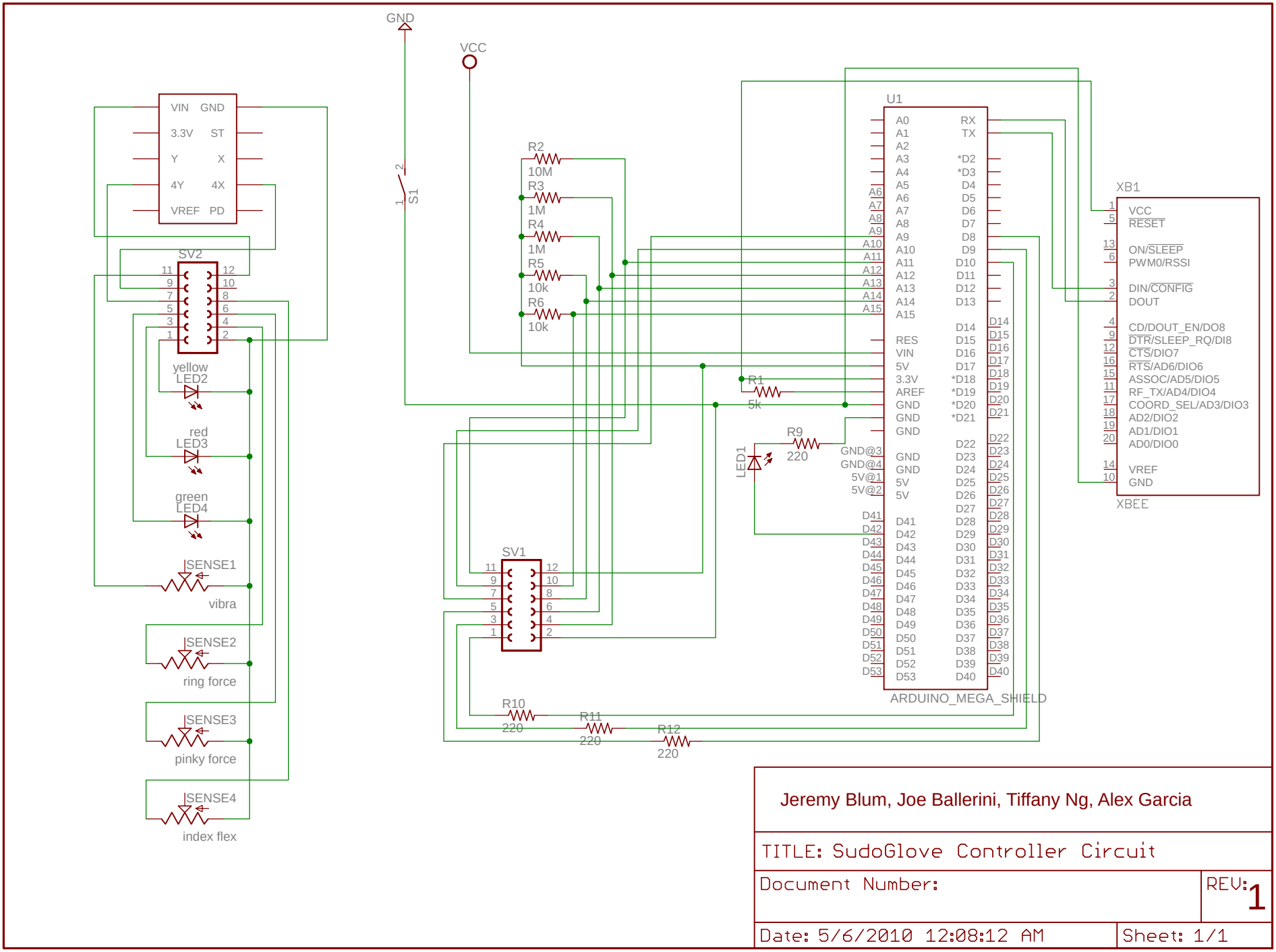

Jeremy Blum, Joe Ballerini, Tiffany Ng, Alex Garcia

TITLE: SudoGlove Controller Circuit

Document Number:

REV: 1

Date: 5/6/2010 12:08:12 AM

Sheet: 1/1