RevNo	Revision note	Date	Signature	Checked

Sectional Ortho 2

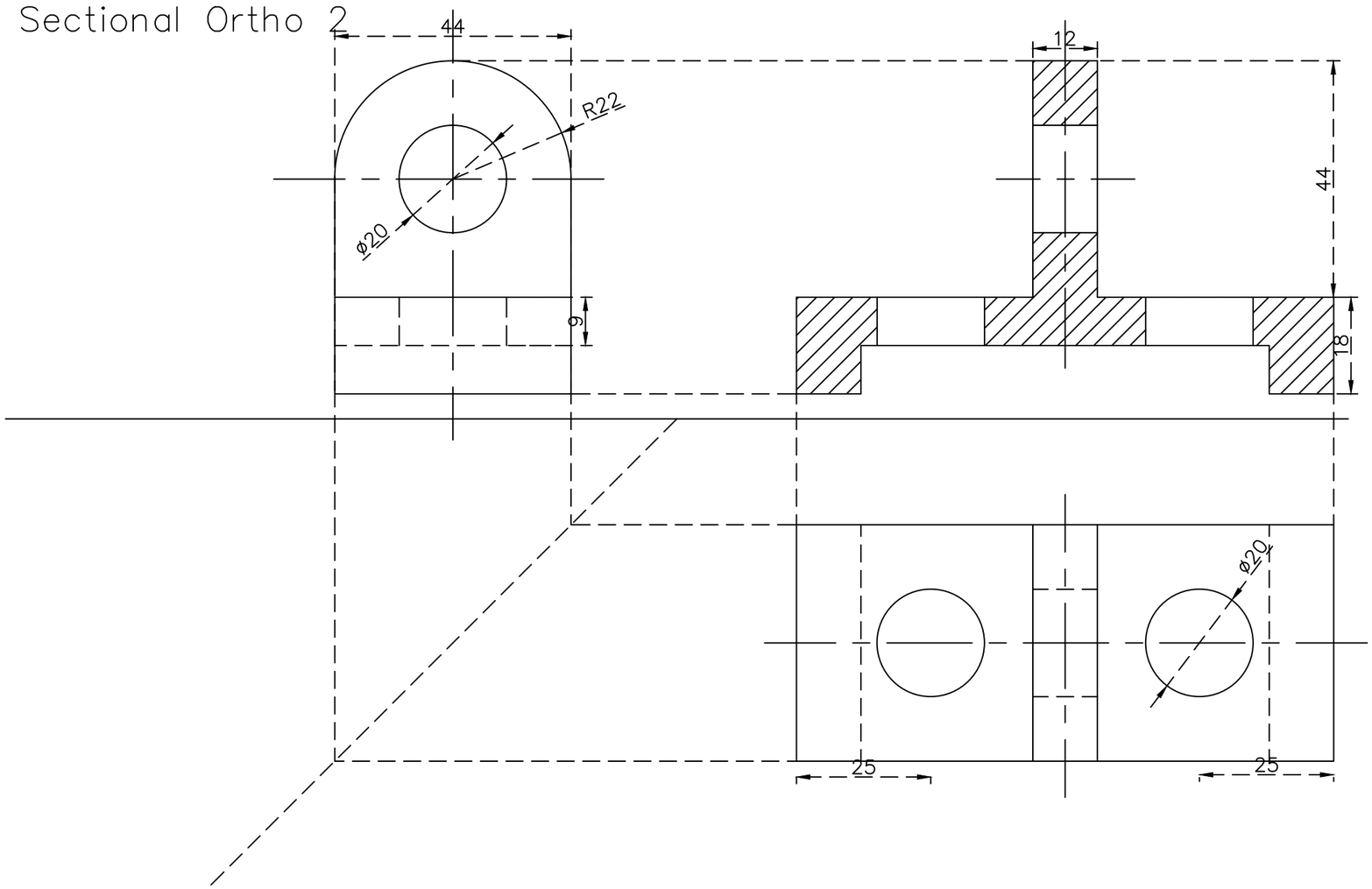

FILE NAME	FSCM NO	SHEET	SCALE 1:1
SIZE			
DRAWN			
CHECK		NAME:TANU KOHLI	
APPR.			
ISSUED			
REV		DWG NO Roll no. - 4155	
CONTRACT NO			