| RevNo | Revision note | Date | Signature | Checked |
|---|---|---|---|---|
| | | | | |

Sectional Ortho 2

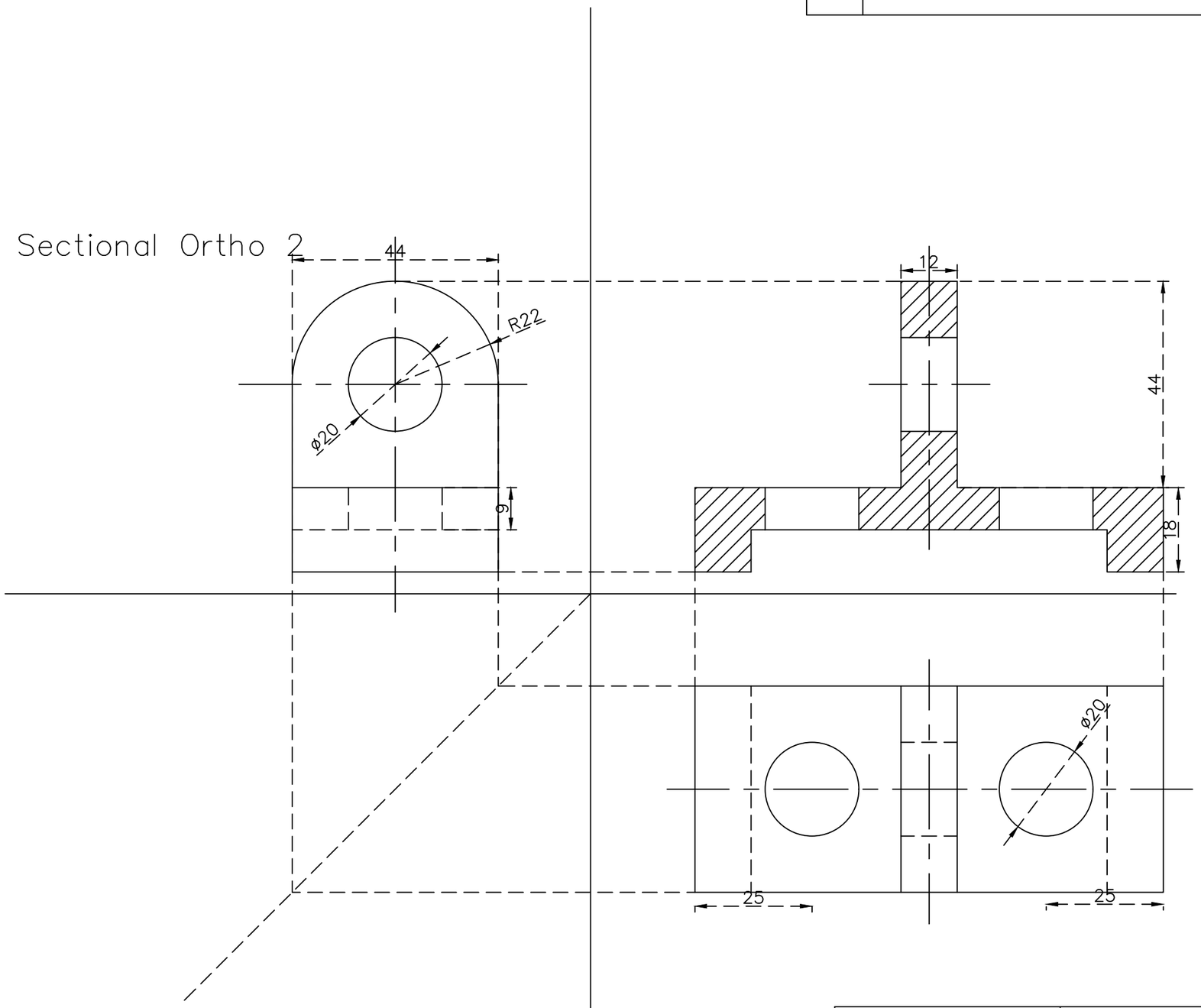


| | | | |
|---|---|---|---|
| FILE NAME | FSCM NO | SHEET | SCALE 1:1 |
| SIZE | | | |
| DRAWN | | | |
| CHECK | | NAME:AKSHIT KOTNALA | |
| APPR. | | | |
| ISSUED | | | |
| REV | | DWG NO Roll no. - 4163 | |
| CONTRACT NO | | | |