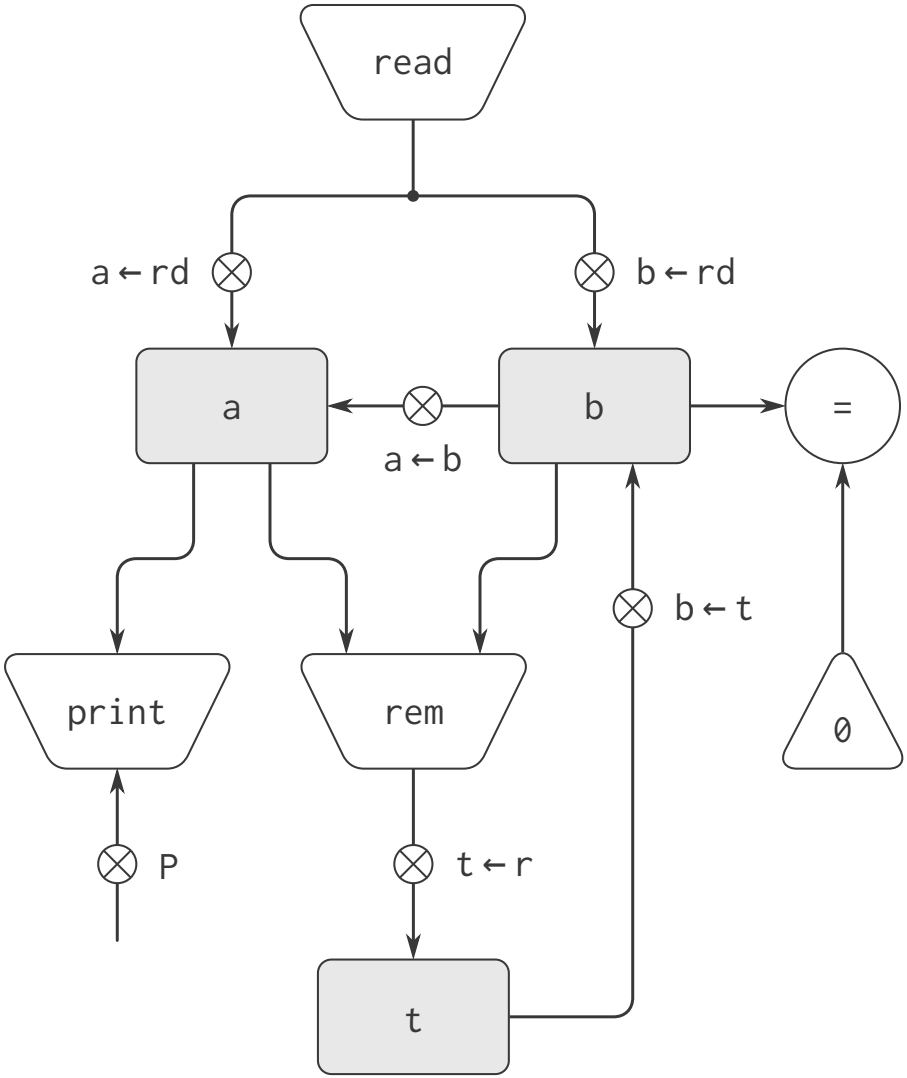


```
(controller
 gcd-loop
   (assign a (op read))
   (assign b (op read))
 test-b
   (test
    (op =) (reg b) (const 0))
   (branch (label gcd-done))
   (assign
    t (op rem) (reg a) (reg b))
   (assign a (reg b))
   (assign b (reg t))
   (goto (label test-b))
 gcd-done
   (perform (op print)
            (reg a))
   (goto (label gcd-loop)))
```