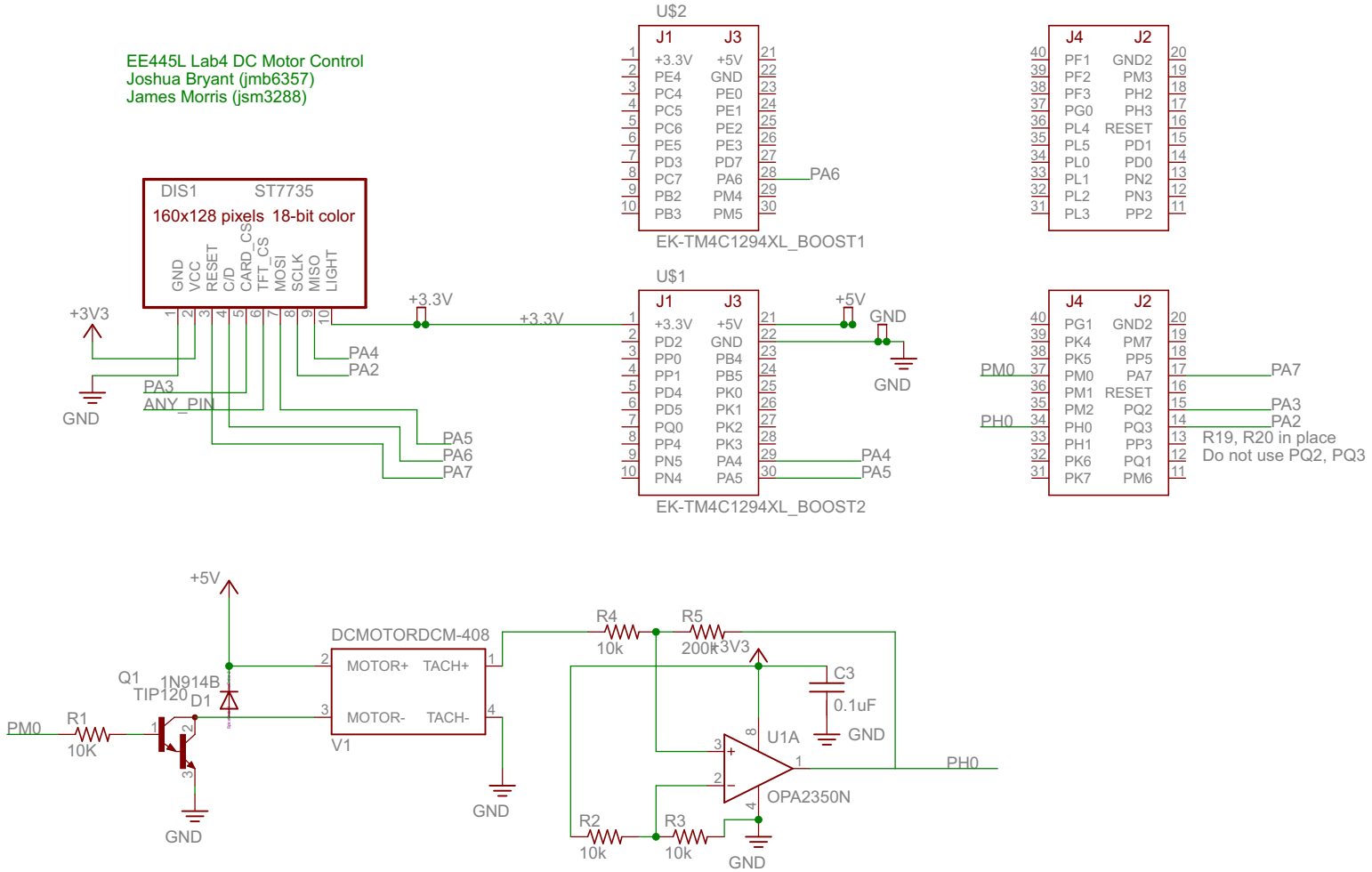

9/24/2014 2:40:15 AM F:\Personal\CollegeClasses\EE445L\445LTeamCouch\CircuitFiles\Lab4\Lab4.sch (Sheet: 1/1)