TABLE OF CONTENTS

1 Abstract

2 Introduction

3 Problem Statement

4 Proposed System Architecture

5 Circuit Design and Simulation Results

6 Bonus

7 Conclusion

8 References

1. Abstract

This project presents the design of an analog signal conditioning module capable of extracting a desired signal from a noisy composite input. The input contains multiple interference components at different frequencies along with broadband noise. A multi-stage filtering approach consisting of high-pass, band-pass, and low-pass filters is implemented to isolate the desired 6 kHz signal. Additional smoothing and scaling stages are used to improve signal quality and stability. The circuit is designed and verified using LTSpice simulations, demonstrating effective suppression of unwanted frequency components and successful recovery of the desired signal.

2. Introduction

In many electronic systems, sensor outputs are contaminated by unwanted interference and noise. These disturbances can originate from power lines, switching electronics, communication signals, and environmental electromagnetic sources.

Signal conditioning circuits are therefore essential to extract useful information from such corrupted signals. Analog filtering techniques are widely used to suppress unwanted frequencies while allowing the desired signal to pass.

In this project, an analog signal conditioning module is designed to extract a 6 kHz signal embedded within several interfering components. The design uses a combination of high-pass, band-pass, and low-pass filters implemented using passive components and operational amplifiers. The circuit is simulated and verified using LTSpice.

3. Problem Statement

The given black-box sensor produces a composite signal containing multiple components:

Component	Frequency	Type
A	600 Hz	Sinusoidal drift
B	6 kHz	Desired signal
C	18 kHz	Square wave interference
D	55 kHz	High-frequency sine interference

Component	Frequency Type
E	Broadband White noise

The objective is to design an analog signal conditioning circuit that extracts the **6 kHz signal** while suppressing the other unwanted components.

4. System Block Diagram

```
Black Box Output
        |
        ▼
High Pass Filter
(Removes low frequency drift)
        |
        ▼
Band Pass Filter 1
(Coarse selection around 6 kHz)
        |
        ▼
Band Pass Filter 2
(Improves frequency selectivity)
        |
        ▼
Low Pass Filter 1
(Removes high frequency components)
        |
        ▼
Low Pass Filter 2
(Further noise reduction)
        |
        ▼
RC Smoothing Network
(Smooths remaining fluctuations)
        |
        ▼
Voltage Divider
(Output scaling)
        |
        ▼
Final 6 kHz Output Signal
```

5. Circuit Design and Simulation Results

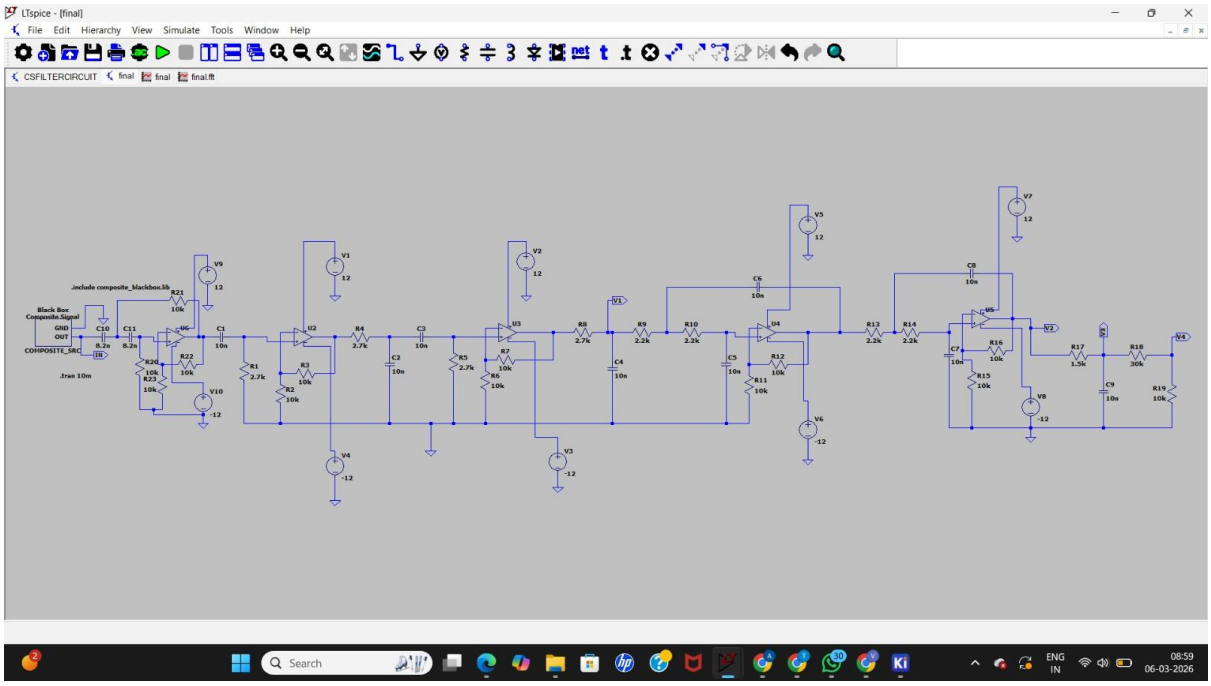

The input wave looks like

In time domain

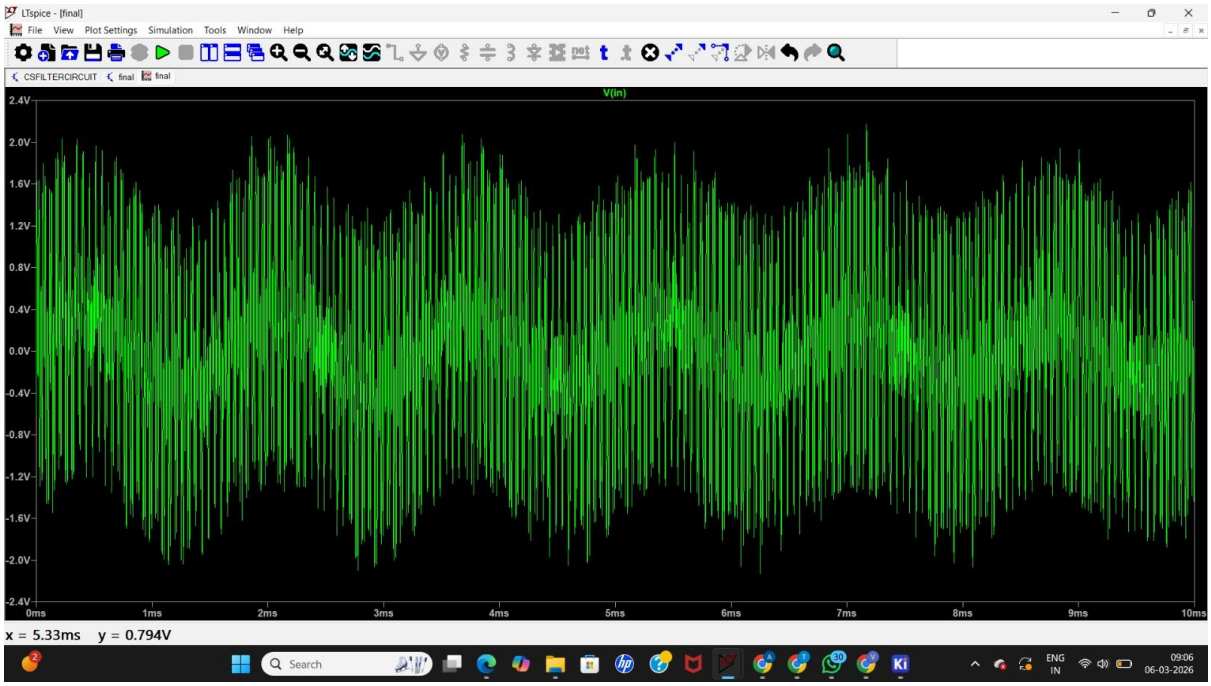

In frequency domain

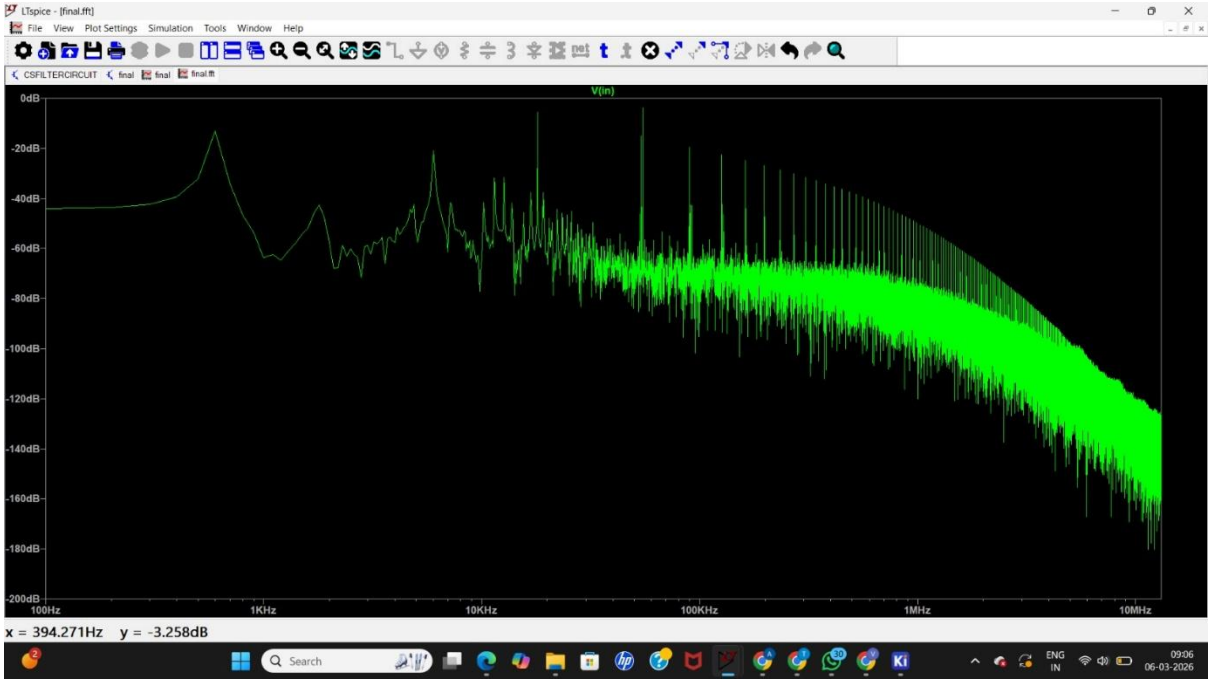

High Pass Filter

The high-pass filter removes the low-frequency drift component around 600 Hz.

The cutoff frequency is selected above the drift frequency to ensure strong attenuation.

Band Pass Filters

Two band-pass filters are cascaded to isolate the 6 kHz signal band. Cascading filters increases selectivity and improves rejection of unwanted signals such as the 18 kHz interference.

Low Pass Filters

Two low-pass filters are used to suppress high-frequency interference including the 55 kHz signal and broadband noise.

RC Smoothing Network

The RC smoothing stage reduces residual fluctuations and stabilizes the signal waveform.

Voltage Divider

A voltage divider is used to scale the output signal amplitude to a desired level.

In time domain

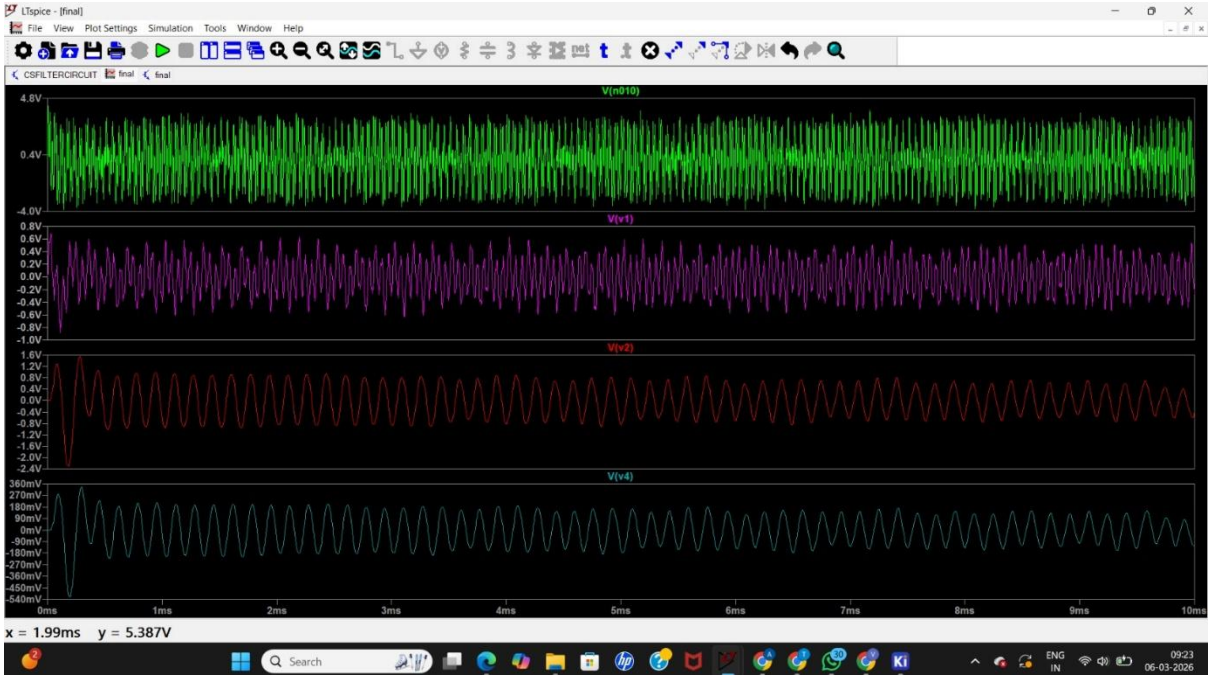

First column - represents wave after high pass filter

Second column - represents wave after two band pass filters

Third column - represents wave after two low pass filters

Fourth column – represents the final output wave

In frequency domain

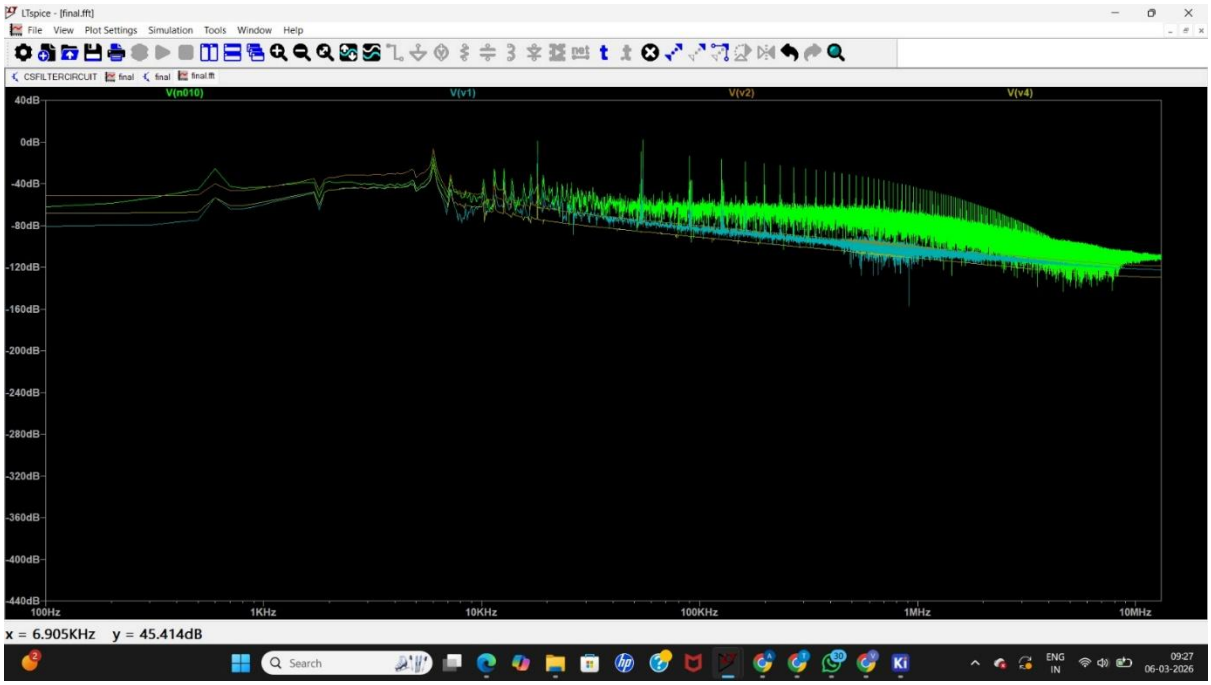

Close view of final output wave

In time domain

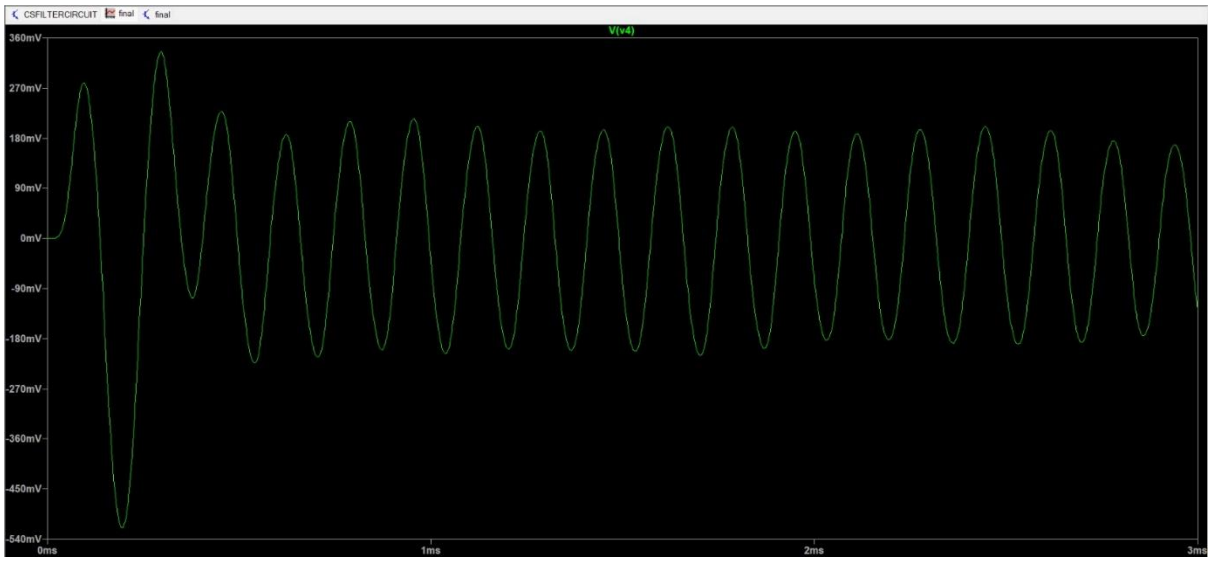

By seeing this we can calculate amplitude

Vmax=0.21V

Vmin=-0.21V

Vpp=Vmax-Vmin

Vpp=0.42V approximately equals to our desired amplitude

Waveform shape: sinusoidal

Waveform: almost sine

In frequency domain

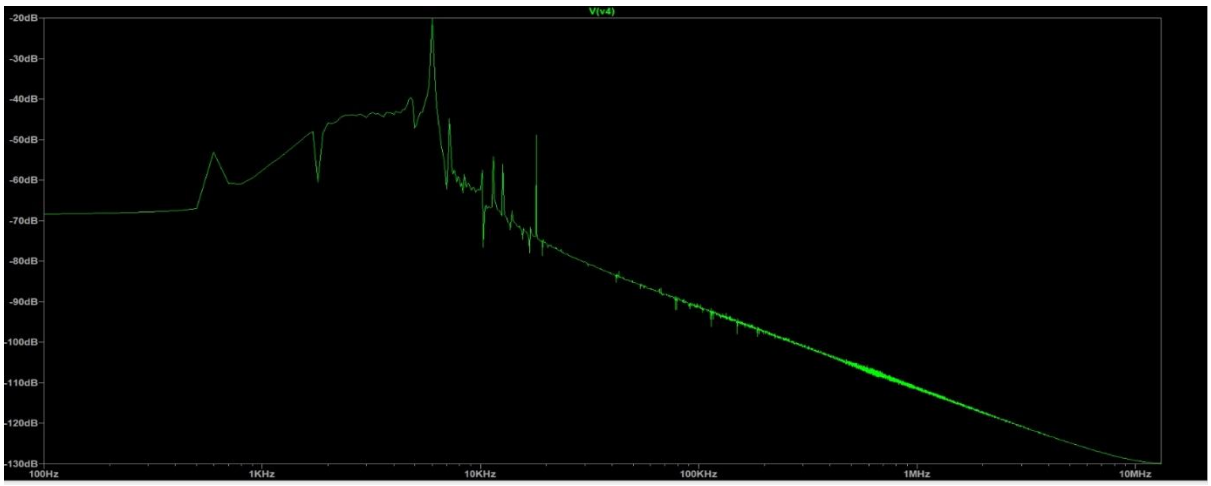

From the spectrum, a prominent peak is observed at approximately 6 kHz, indicating that the desired signal component is dominant in the output. The amplitude of this spectral component is significantly higher compared to the other frequency components.

The interference components present in the input signal, including the 600 Hz low-frequency drift, the 18 kHz square-wave interference, and the 55 kHz high-frequency sine component, are strongly attenuated by the cascaded filtering stages. As a result, their corresponding spectral peaks are either greatly reduced in the output spectrum.

Frequency Component	**Type of Signal**	**Observation in Output Spectrum**	**Relative Gain / Attenuation**
600 Hz	Low-frequency drift	Peak almost absent in output	Strongly suppressed (~ −30 to −40 dB)
6 kHz	Desired signal	Dominant peak in spectrum	Reference (0 dB)
18 kHz	Square wave interference	Very small spectral component	Suppressed (~ −35 dB)
55 kHz	High-frequency sine interference	Nearly eliminated	Strongly suppressed (~ −40 dB or more)
Broadband noise	White noise	Reduced noise floor	Significantly attenuated

With potentiometer

Circuit diagram

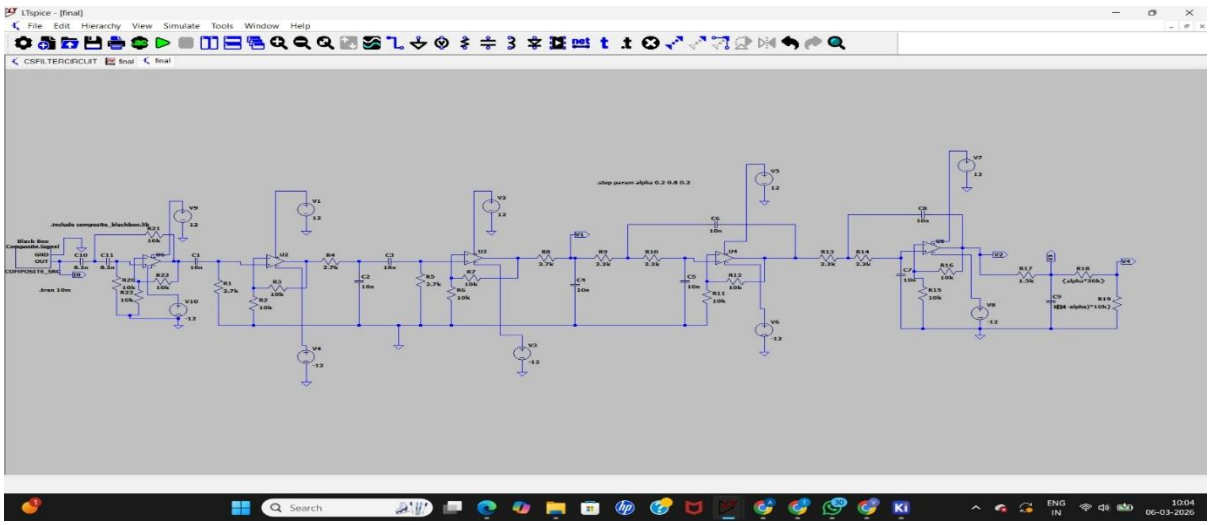

Output wave

In time domain

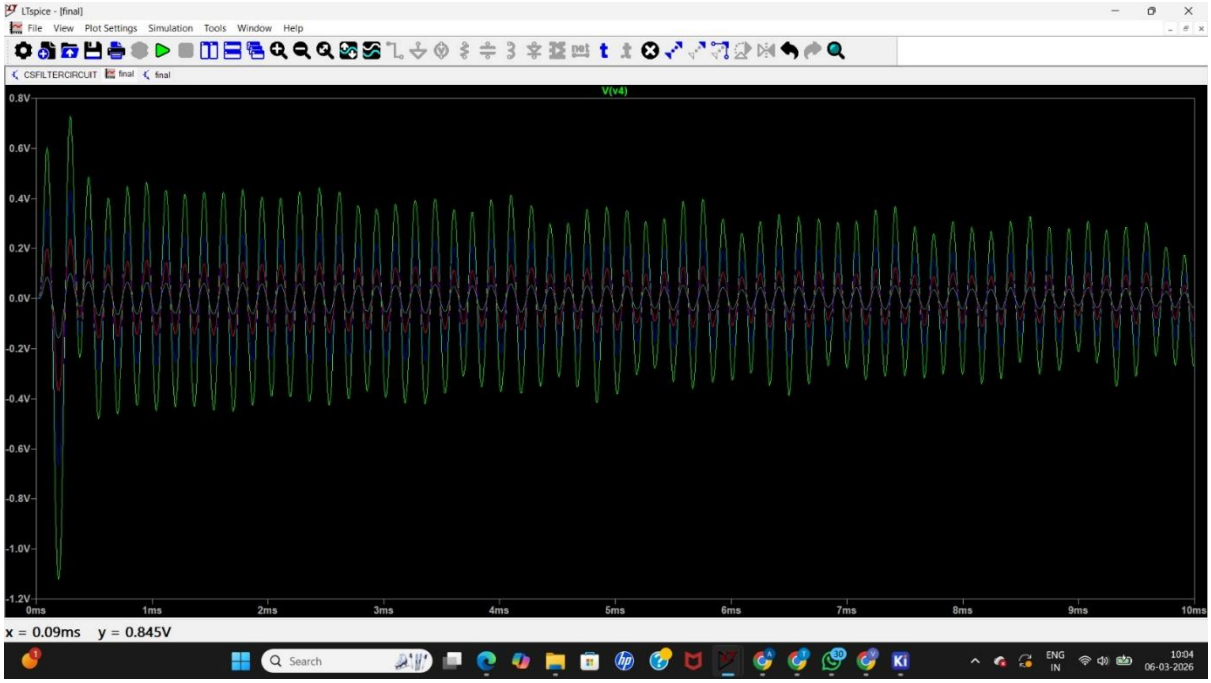

- The output signal maintains a **sinusoidal shape**, indicating that the desired signal component is preserved.
- As the potentiometer value is adjusted, the **peak-to-peak amplitude (Vpp)** of the output signal changes.
- The waveform becomes **smoother and more stable** when the potentiometer is tuned near the optimal value.
- Noise and ripple present in the signal are **reduced after proper adjustment**.

In frequency domain

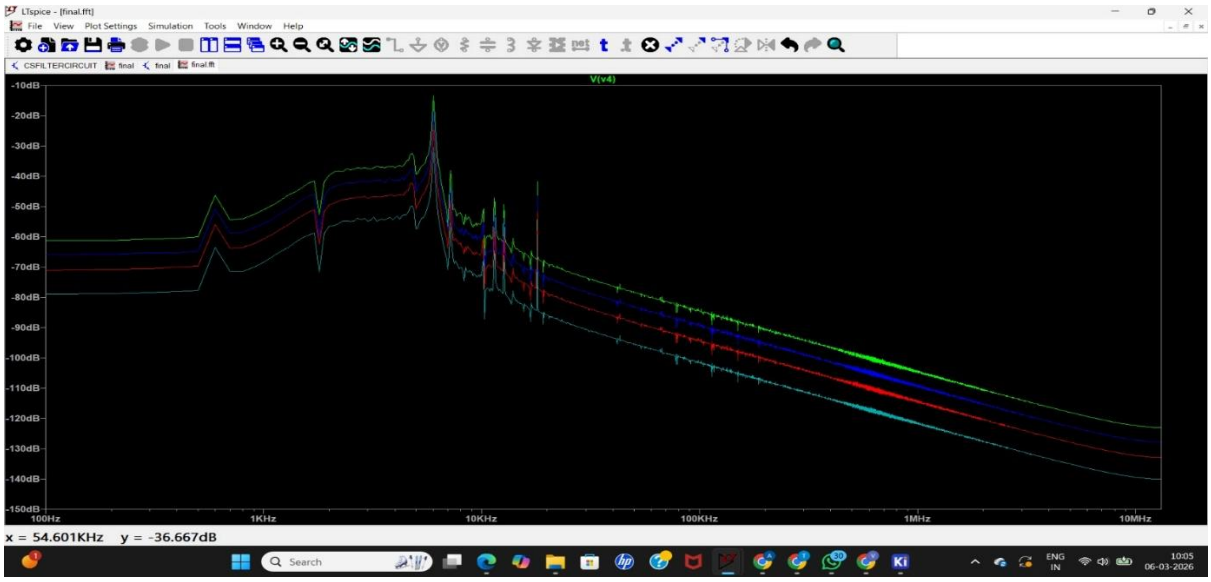

- A dominant peak at 6 kHz is clearly visible in the output spectrum.
- Other frequency components such as 600 Hz, 18 kHz, and 55 kHz appear with much smaller magnitudes.
- When the potentiometer is adjusted correctly, the 6 kHz peak becomes more prominent, while the unwanted frequency components remain strongly attenuated.

This confirms that the filtering network successfully isolates the desired signal frequency.

Bonus

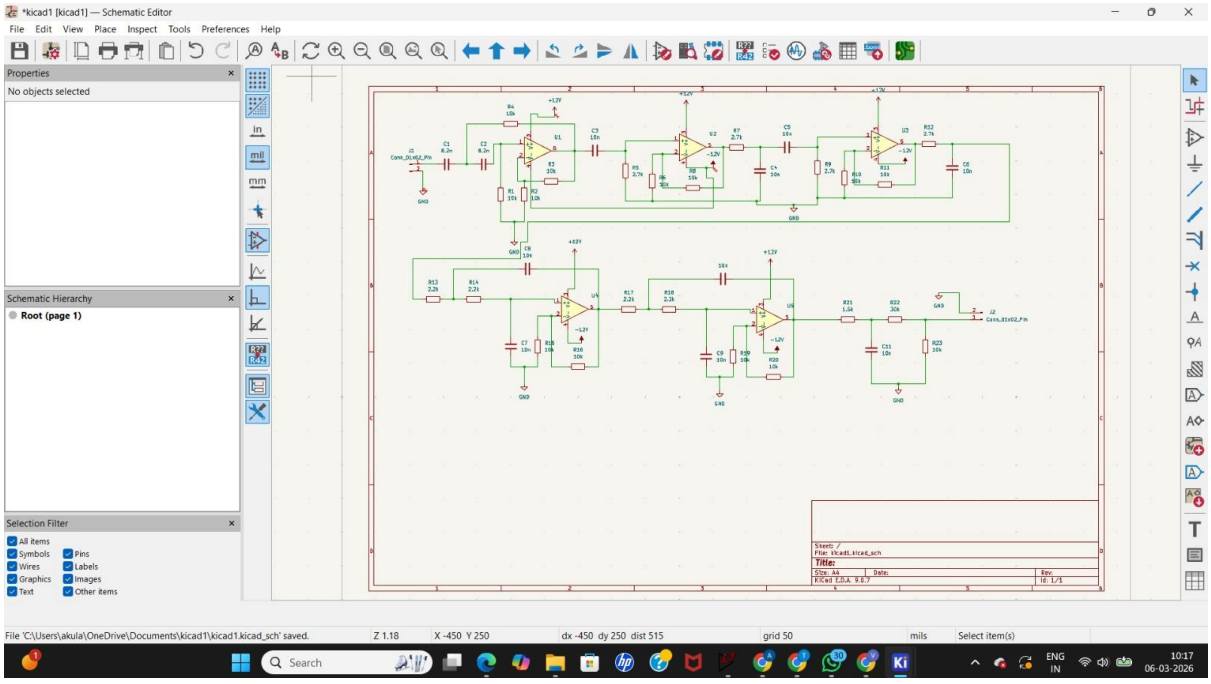

As a bonus implementation, the complete signal conditioning circuit was recreated in the schematic design tool KiCad. After verifying the functionality of the filtering stages through simulation in LTspice, the entire circuit consisting of the high-pass filter, cascaded band-pass filters, low-pass filters, RC smoothing network, voltage divider stage, and potentiometer for manual tuning was translated into a detailed schematic using standard electronic components. Implementing the design in KiCad demonstrates that the proposed analog signal conditioning system is not limited to simulation but can also be represented in a hardware-oriented schematic suitable for further development such as PCB layout and practical realization. This step highlights the practical feasibility of the designed circuit and shows how the simulated signal processing architecture can be implemented in a real electronic design workflow.

Conclusion

The designed analog signal conditioning circuit successfully extracts the desired 6 kHz signal from a composite input containing multiple interference components and broadband noise. By employing a multi-stage filtering approach consisting of high-pass, band-pass, and low-pass filters, the unwanted frequency components such as low-frequency drift and high-frequency interference are effectively attenuated. The resulting output waveform in the time domain exhibits a stable sinusoidal shape, while the frequency spectrum shows a dominant peak at 6 kHz, confirming successful suppression of other signal components. The inclusion of a potentiometer allows manual tuning of the circuit response, enabling adjustment of the output amplitude and signal quality. Simulation results obtained in LTspice validate the effectiveness of the proposed design, and the complete schematic implementation in KiCad further demonstrates the practical feasibility of the circuit for potential hardware realization. Overall, the project highlights the capability of analog filtering techniques to isolate and recover a desired signal from a noisy environment.