المجد للتقنية والمشاريع ش.م.م

AL MAGED TECHNOLOGY PROJECTS L.L.C

99060628, 98218877
ahmad.ae@hotmail.com
www.almagedtechnology.com

About Us

Al majid, are leader of industrial, commercial, specialty and traffic doors. For reliability and leading edge design.

Al majid doors was founded in 2006 and has grown from a family owned business to a leading-edge manufacture and distributor across the globe.

Sales and services are coordinated through a network of branches and distributors within Oman. Surrounding territories and worldwide.

Al majid growth has resulted from product divarication developed to address the requirements of all key market segments.

Products are continually improved through research and development to create value for customer by enhancing quality and reliability.

المجد للتقنية والمشاريع ش.م.م

AL MAGED TECHNOLOGY PROJECTS L.L.C

PROFILE COMPANY

Postal code 311

Sultanate of Oman

P.O.BOX 1415

GSM 99060628, 98218877

ahmad.ae@hotmail.com

www.almagedtechnology.com

Our Location

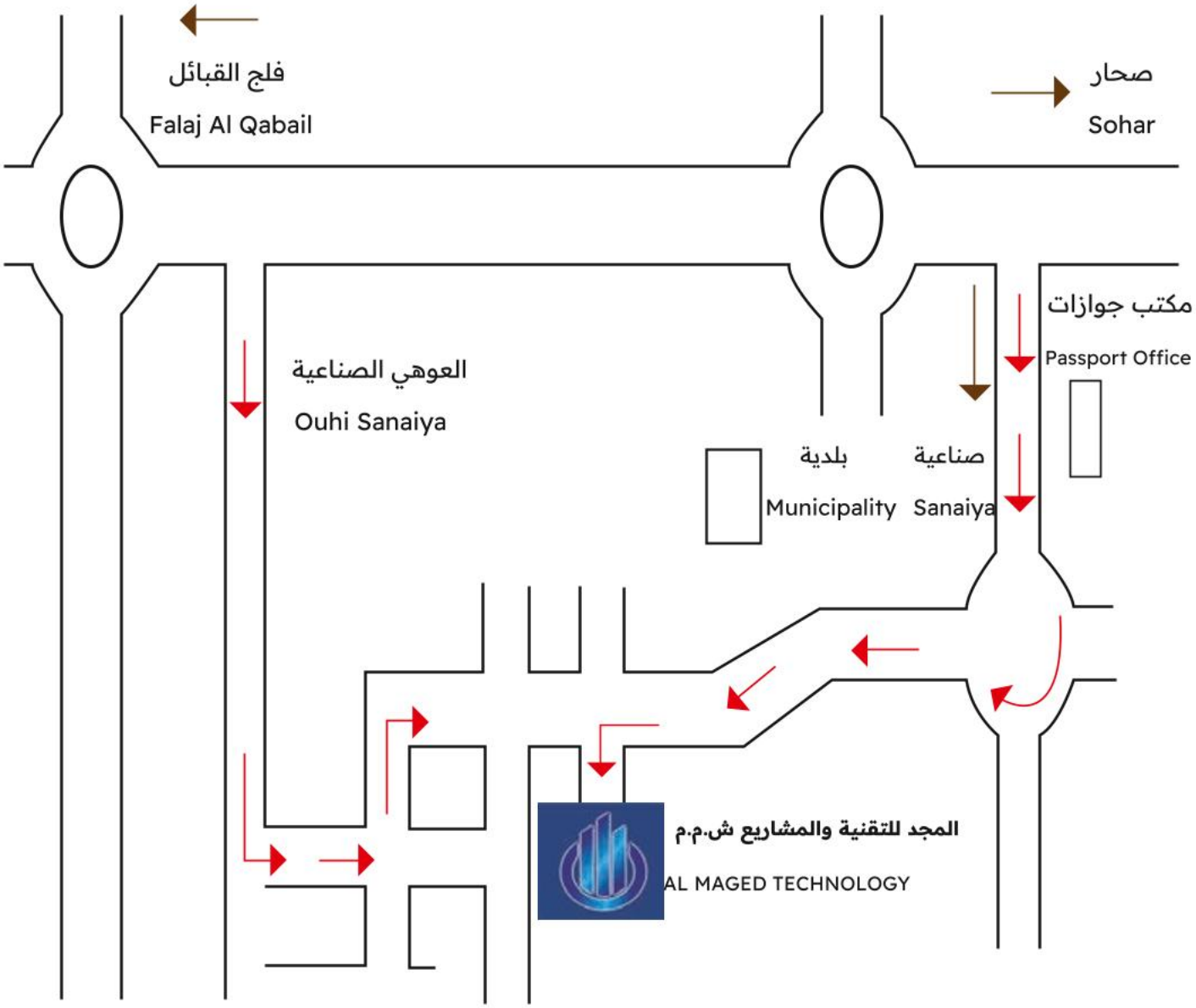

Quality Policy

The Management of AL MAJED TECHNOLOGY Enterprises is commited to

- Provide high quality rolling shuters, steel doors, & garage doors. Continuously make products innovation to exceed clients requirement.
- Provide effective customer service.
- Provide fas afer - sales.
- Comply with all requlatory and statutory requirements.
- Review the quality policy for saiability and effectiveness off the quality management system at reqular intervals

MR. Ahmed Mohammed
(General Manager)

VISION & MISSION

VISION

The driving philosophy behind Al Majid Technology Enterprises is to be the leader in the door industry in providing high quality products at quality prices, with high level of customer survive and continues products innovation.

MISSION

To provide our customer with high quality products that exceed their expectation and customer service and after – sales service that is second to none.

STRENCTHS

- AMTE has the production facility and availability of materials which enables us to provide better pricing structure and earliest delivery time.
- AMTE is gives us a better outlook of the door industry. We are following the guarantees professionalism and value to our customer.
- AMTE also commenced the development and implementation of quality management system in compliance with the requirements the requirements and standards.

ORGANIZATION CHART

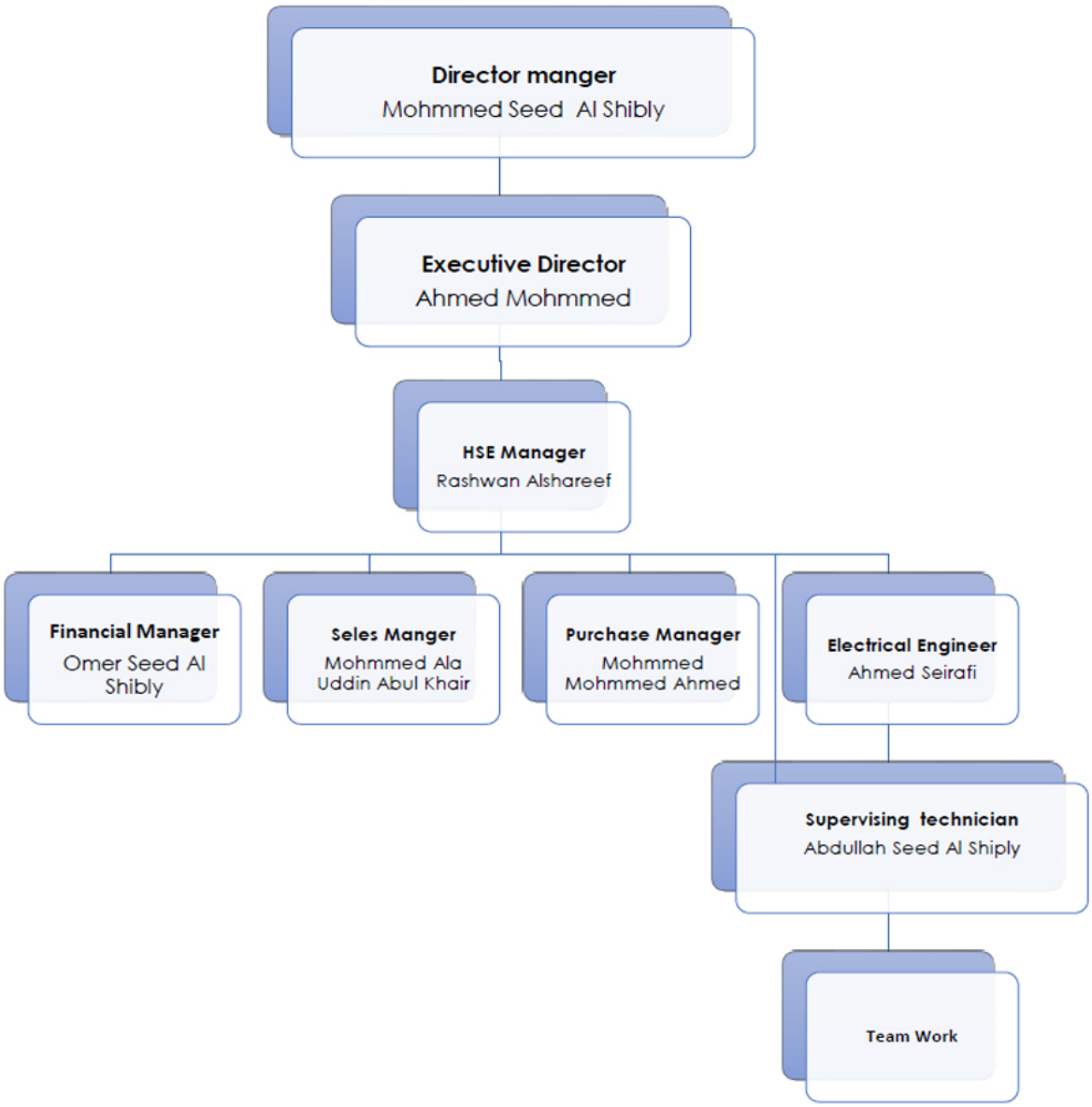

Our range of products includes

- A) Roller Shutter
  1- Steel Rolling Shutter.
  2- Fire rated Rolling Shutter.
  3- Aluminum Rolling Shutter.
  4- Perforated Rolling Shutter.
  5- punched/Slotted Rolling Shutter. Polycarbonate Rolling Shutter.

- B) Steel Doors
  1- Fire rated. 2- Non fire rated.

- C) PVC High Speed Doors & PVC Swing Doors.

- D) Swing, Sliding Doors, & Tempered glass works.
  (Hand rail, aluminum molding, etc....

- E) Fire & Smoke Curtains, Blinds.

- **F) Traffic barriers, Gate Automation, & Car parking shed.**

- G) Sectional Overhead Doors

- H) Dock Leveler & Dock Shelter

Rolling shutter

- See through roller shutter manufactured from 20f pre galvanized steel selection perforated of mind. We have al majd 60% light transmission and rolled to suit a flat lath profile of nominal 100mm or straight.

- Lath fully interlocked with nylon end locks fitted to ends of laths for free movement. All curtains completed with specially extruded aluminum T bottom rails.

- When back lit at night with window display lightings, display lightings, the light transmission through the vise-screen curtains contrast with the lower level of reflected light on the curtains surface. For minimum "transparent" effect we recommend vise- screen is powder coted. Alternative color finishes are available

Rolling shutter

Fire rated Rolling Shutter

We are proud to say that all O.S.F's fire rated shutter & industrial shutter are manufactured in Oman using the latest Italian roll forming machine that are capable of roll forming in various thickness from 0.8-2mm and are to 4 hours fire resistant.

O.S.F's shutter offered a wide range steel security industrial rolling shutter to provide an effective security solution for all types of industrial premises from new industrial un it to factory extensions or refurbishment this manual hand chain and electrical fire rated roller shutter system in traditional single skin stem dome or flat lathe provide excellent security production for general environment that are both storm heavy duty that manageable in daily use.

- Representatives from the spencer's sided witnessing the test
- Eric ost (MIR) NV, Germany)
- Josef Gossans (MIR) NV, Germany)
- Technical specifications
- Side locks galvanized heavy duty side

Fire rated Rolling Shutter

ROLLING SHUTTER (Fire Rated)

Double Skin Aluminium Insulated Rolling Shutter

ALUMINUM ALLOY ROLLING SHUTTER DOOR

Material characteristic：Using high quality aluminum extruded shutter profiles, multi-layer painting or film layer surface have excellent scratch resistance function, not decay, wearable and anti-collision. Nice white profiles, accepting mass customization according to users requirements(light gray, brown, cream, wood, fused, sand color and light sand color,etc)

Integrated protection and decorative features together, the best replacement of traditional theft network security replacement，flexible way open ways, supporting hand control, group control. The door could be your safe rescue channel when in emergency.

Polycarbonate Rolling Shutter Door

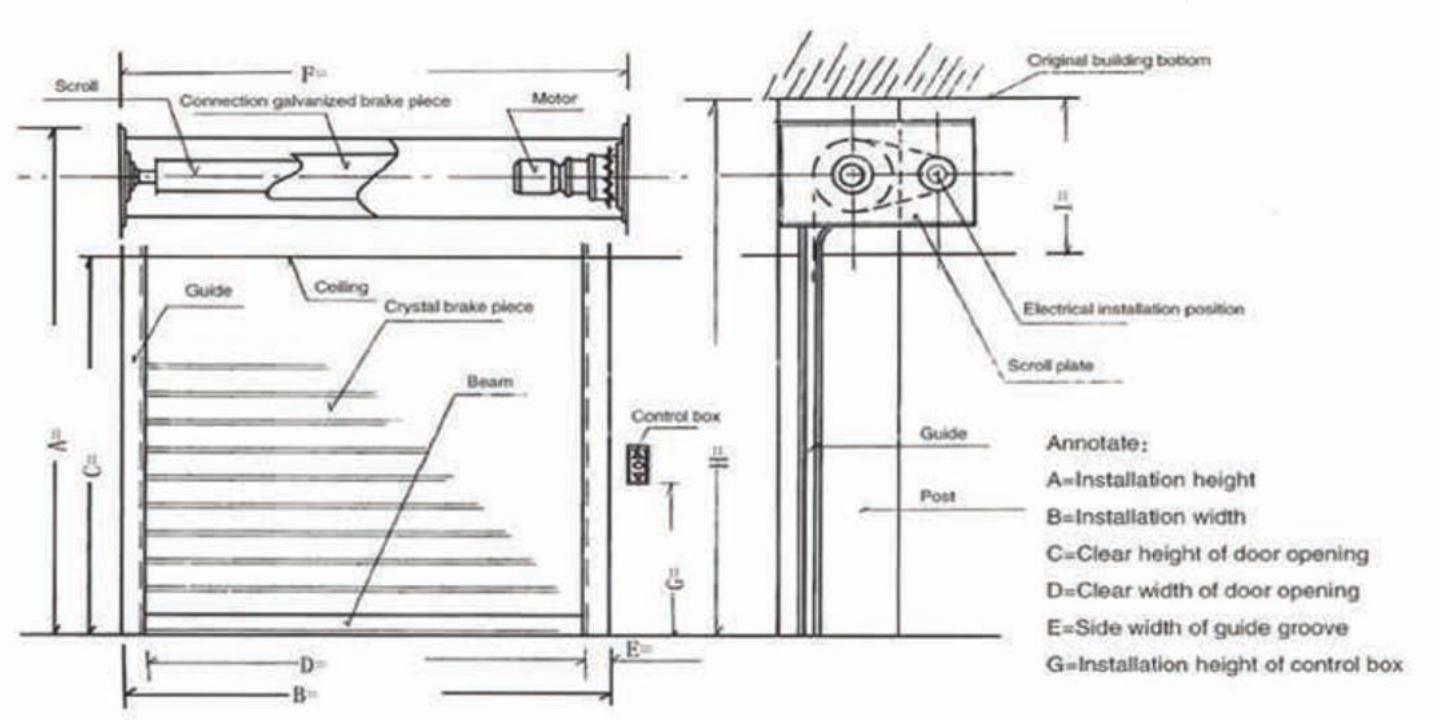

ATTRACTIVE APPEARANCE

AUSTRALIAN ROLL UP DOOR

AL MAGED TECHNOLOGY PROJECTS L.L.C

"CONTINOUS SHEET CURTAIN ROLLER DOOR"

SECTIONAL GARAGE DOOR

ALUMINUM ALLOY GARAGE DOOR

“ Parameter description:
Door opening: w=2860mm * H=2450mm
Faceplate: 2700mm * H=2450mm
Material: Aluminum Alloy - 2.0 Thikness ”

INDUSTRIAL SECTIONAL DOOR

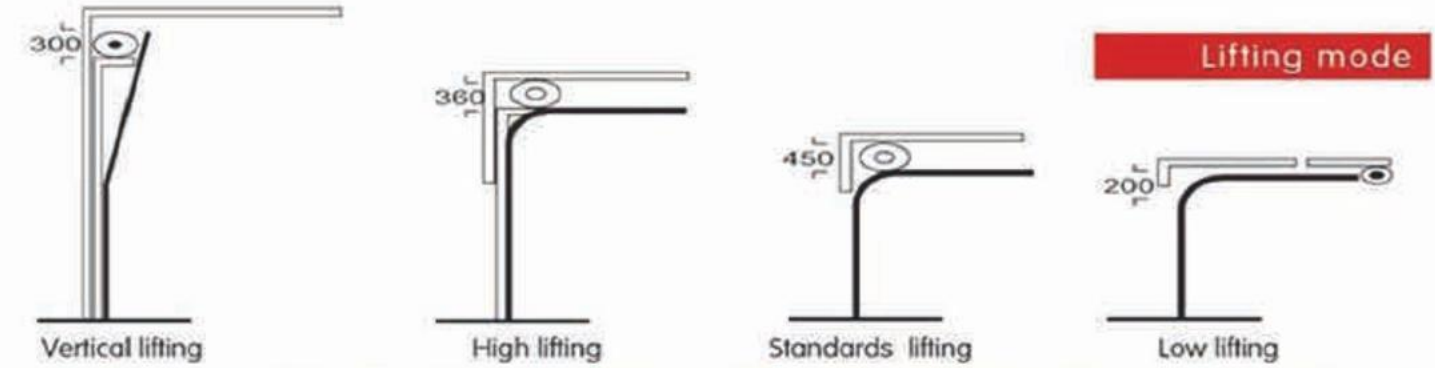

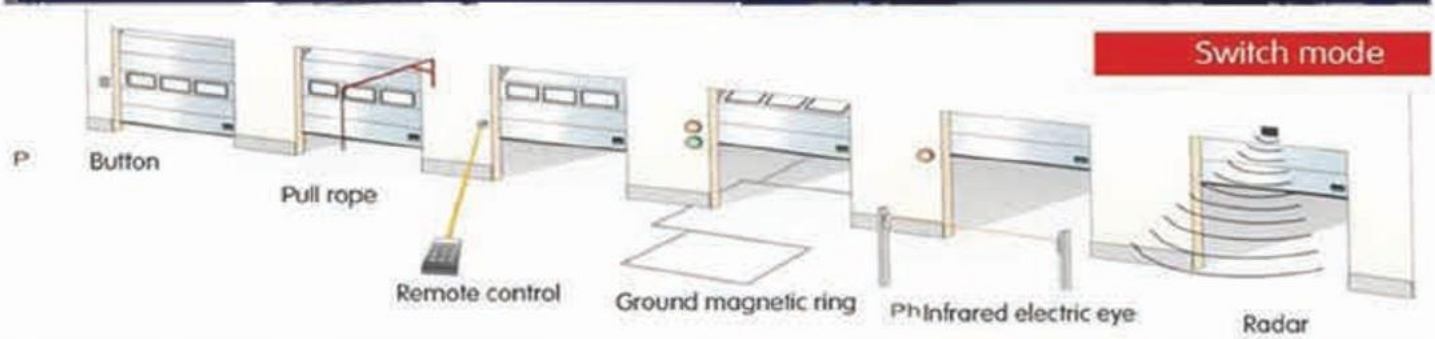

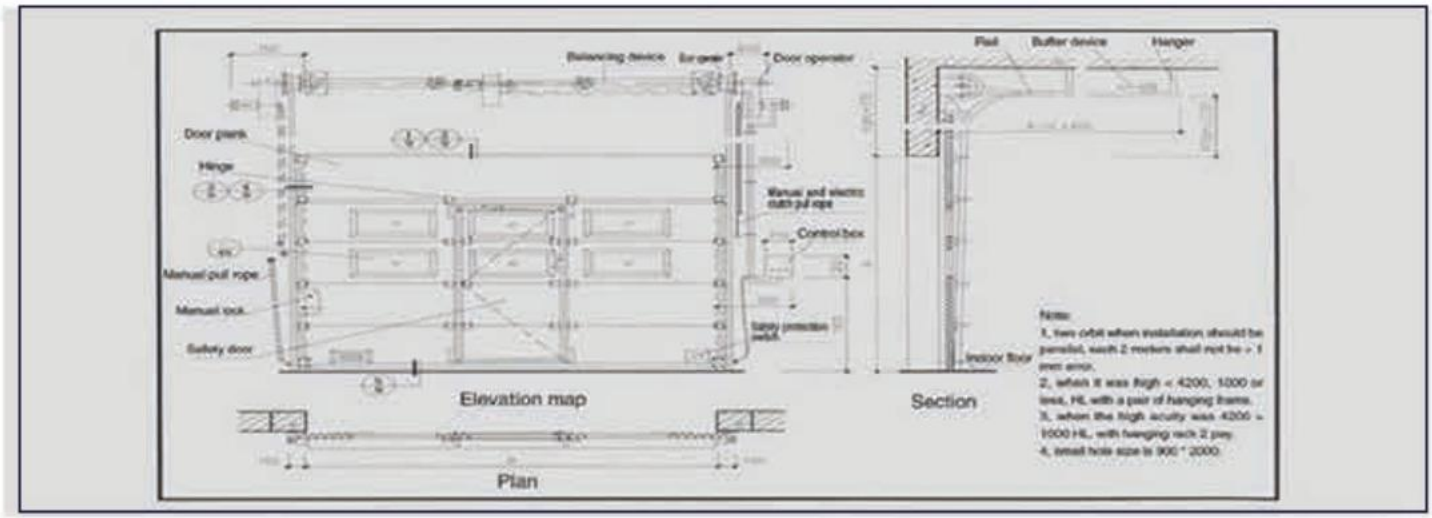

PVC HIGH SPEED DOOR

Zippered Quick door Features
Open 1.2-2.0 m/sec.
High airtight energy efficient zipper patented technology and curtain rail technology combines high sealability for maximum energy efficiency
Self-healing maintenance cost savings When the door by the impact and dislocation occurs, repeat mosaic patented technology that is derailing repair system starts automatically, without any manual and automatic reset to its original state force to effectively reduce maintenance time saving cost.

High security curtain soft and elastic, without any load at the bottom of the door to change, to ensure that the operator in an emergency state in the collision to the door when the operation will not cause harm

PUSH PULL Dual Hinge system unmatched safety record and absolute tightness in PUSH PULL twin shaft system. Loading close dependence and the curtain at the bottom of the traditional fast door to achieve, you can drive dual axis system so that the upper curtain sprocket perfect bite does not depend on the door of its own weight can be achieved fast closing, this patented technology to avoid the hard parts usage of.

More than one million times the durability performance speed doors reduce the use of materials, easy to wear, strong and flexible curtain is very durable, can withstand millions of opening and closing operation, in the use of some products has reached 500 million times for opening and closing.

PVC HIGH SPEED DOOR

Technical Parameters	Technology Category
Useage	Widely used in food chemistry textile electronics supermarket refrigeration logistics, warehousing and other places
Door Size	Maximum size W6000 H6000MM exceed this range according to the site specific production process
Wind strength	Wind resistance of up to 1176pa
Opening&close speed	0.5-1.5m/s
Color curtains	Red orange yellow, green, blue or black gray transparent
Roof structure	Chassis made from 2MM thick galvanized steel plates at both ends by a thick 6MM steel production. In the end plate mounting reel bearings, drive motor mounts balanced system components and mounting holes, steel surface paint treatment to the guests desired color. Reel mounted on the chassis by a spool shaft bearing and other components.
Door frame	1.5MM thick cold rolled steel or 1.5MM thick stainless steel
Perspective window	1.2MM PVC transparent window
Drive System	220V/380V 50Hz IP55 power 0.55KW-6.5KW
Door Control System	PLC converter, adjustable delay off, greatly improving the efficiency in the use and life of German goods into the encoder.
Optional	Geomagnetism, radar, airbag, infrared, remote control or by hand switch.

SPRIAL HIGH SPEED DOORS

◆ Simple fast hard door fast energy-saving and efficient seal in a new environmentally-friendly metal industrial doors open at speeds up to 1 meter per second. Applicable to the need for frequent high-speed logistics channel. The door seal to reduce air circulation.

◆ Door with aluminum alloy material, the thickness of 23MM production of more compact space for small space for small space inside and outside the door of the small temperature difference. This product has a high reliability practicality easy to operate and fast repair characteristics. Drive control uses a stable energy-saving accurate system to ensure the reliable operation of the door, to ensure that annual failure-free operation of more than 270,000 times.

FIRE RATED STEEL DOORS

FIRE EXIT DOORS

We at Intaj Manufacture UL 10 C approved 120 mins Fire Rated Doors. Theese doors generally being used at Ware houses, Labour accomadations Staircase exits & wherever Fire Rating is Required. Our doors have passed the fire Test with Intrertek as the certifiying body from Thomas Bell-Wright Labarotaries in Dubai, U.A.E We use the latest machineries & softwares for manufacturing High Quality doors to meet current market standards & requirements. We offer a varietry of combinations of diffrent hardwares & design to meet customer needs. Any colours can be powdercoated on our doors including wooden finish to match that of a wooden door.

LOUVER DOORS

We at Intaj Manufacture Steel louver Doors. Theese doors generally being used at LV rooms, HV rooms, Server rooms & wherever Security & Ventilation is required. We use the latest machineries & softwares for manufacturing High Quality doors to meet the current market standards & requirements. We offer a variety of combinations of diffrent hardwares & design to meet customer needs. Any colours can be powdercoated on our doors.

PORTA CABIN & CONTAINER DOORS

We at Intaj Cater to Steel Door Requirements of Various Portable Offices, Storage units, & any mobile units which has various criterias to meet our steel door being 120 min fire Rated, offers the best solution in terms of Security & Safety. In todays market scenario of High paced Civil Constructions Portable units play a very important Role & we Cater to the requirements of various Site conditions. Our Doors are suitable on Modified Containers, Gypsum wall partions & Insulated Panels.

TRAFFFIC BARRIERS

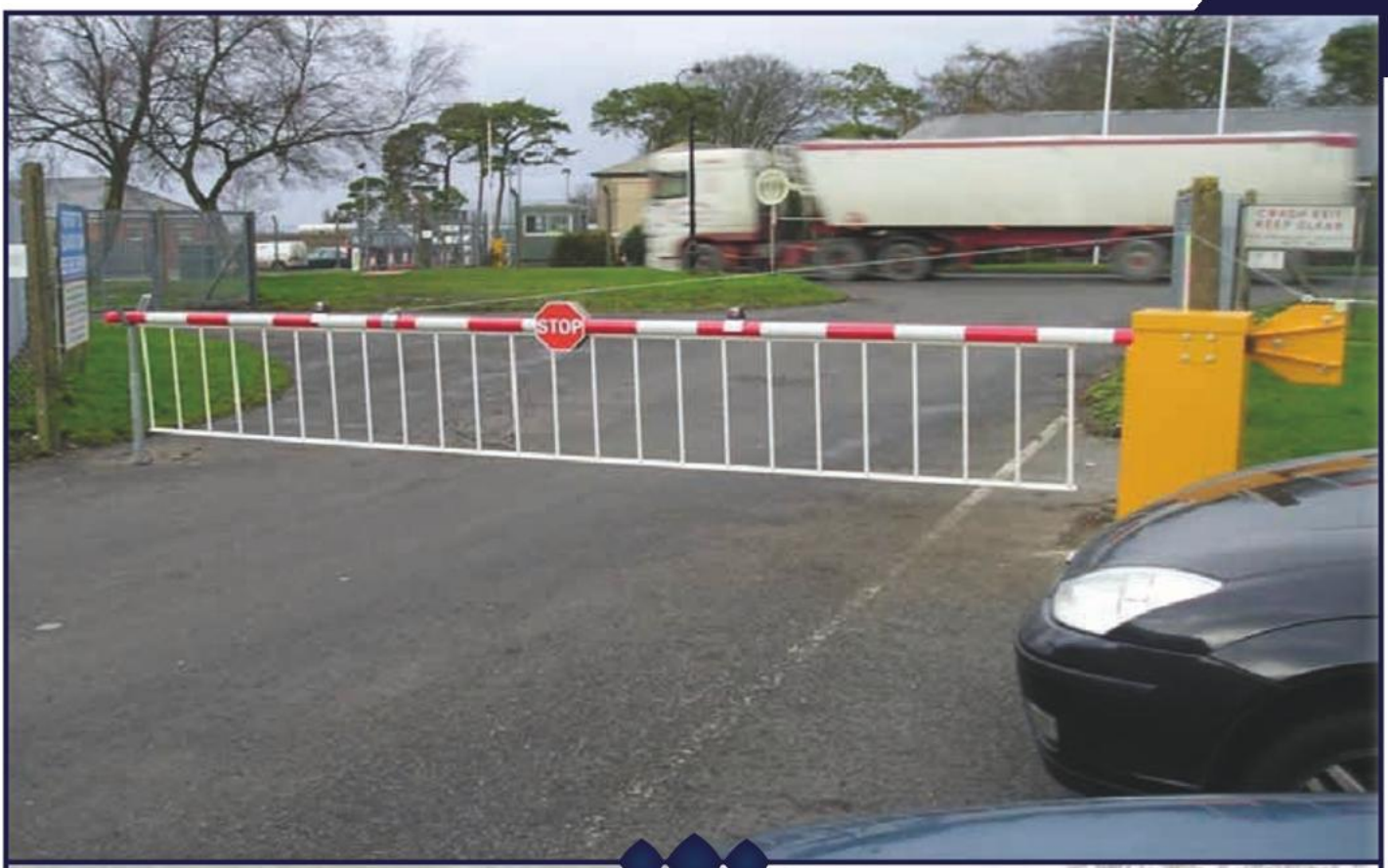

GATE AUTOMAION

DOCK LEVELER

WIDTH mm	HEIGHT mm	CAPACITY tons	MIN PLATFORM HEIGHTmm	MAX PLATFORM HEIGHTmm
2000	1000	6	1000	1150
2000	1500	6	900	1200
2000	2000	6	900	1200
1800	1500	6	900	1200
1800	2000	6	900	1200
2000	1000	10	1000	1150
2000	1500	10	900	1200
2000	2000	10	900	1200
1800	1500	10	900	1200
1800	2000	10	900	1200

DOCK SHELTER

◆ Mechanical loading door seal made of aluminum profiles from the front frame and the rear frame composition, they are connected to each other via a bracket.

Frame structure with reinforced polyester fiber fabric wrap. When the vehicle is parked is not accurate, the sides and top door seal due to squeeze retracted, this time at the top will automatically rise, which reduces the loading on the vehicle door seal damage, the front frame fixed to the wall with two layers of fabric reinforcement material in the main wear area at the top of an opening, if necessary, it can be a slight increase in the cost of a top wall with two layers of overlapping material division into strips, loading doors closed when provided includes all fixing materials and sealant.

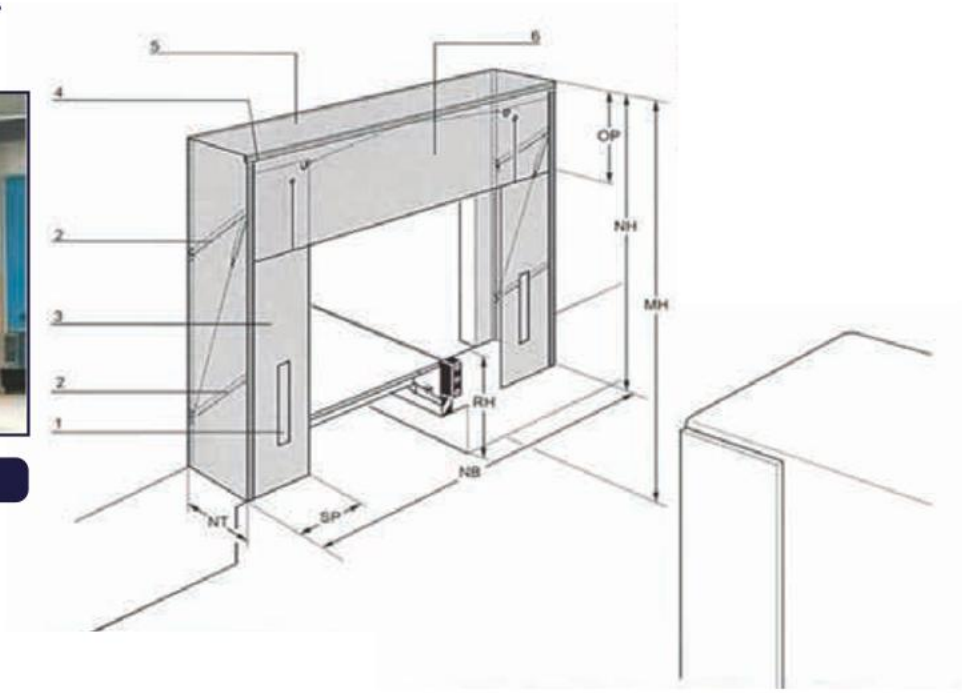

SME TYPE OPTION

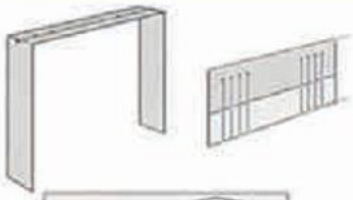

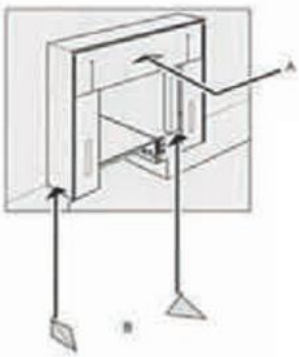

NB mm	NH mm	OP mm	SP mm	MH mm	NT mm
3250	3200	1000	600	4500	600
3250	3400	1000	600	4500	600
3250	3600	1000	600	4500	600
3450	3200	1000	700	4500	600
3450	3400	1000	700	4500	600
3450	3600	1000	700	4500	600

SOME OF OUR FEW VIP CUSTOMER

SOHAR ALUMINIUM

OARC

ABCON

HEC

craftsman

مركز سلطان
THE SULTAN CENTER

AGNICE
A MANAFFAT COMPANY

SMM

كارفور
Carrefour

AkzoNobel

25

ديوان البلاط السلطاني
ROYAL COURT AFFAIRS

AL SIYABI
International Group

Coca-Cola

alfada
STEEL FABRICATION & ENGINEERING CO LLC

أصول
Osool

المها
al Maha

عمان ريفكو
Oman Refco

سلطنة عمان
جهاز الضرائب

Skyline
International LLC

طيران العمانية
OMAN AIR

ONIC

initiative

ENOVA
by VEOLIA

جينتكو
Genetco

ATE
التركي
AL TURKI

SEPMA

الشركة الأهلية للصناعات التحويلية ش.م.ع.م
Al Ahlia Converting Industries Co. S.A.O.C.

METRO
METRO TRADING COMPANY ASCO

عبد الحكيم البلوشي للتجارة
Abdul Hakeem Al-Balushi Trad.

نفط عمان
omanoil

الشركة العمانية اللبنانية
OMANI LEBANESE COMPANY

SOME OF OUR FEW VIP PROJECT

PANORAMA MALL

SULTAN CITY CENTER

CARREFOUR NIZWA

GRAND MALL MUSCAT

LULU RUSTAQ

LULU IBRA

SOHAR ALUMINIUM STORE
INDUSTRIAL SOHAR

OMAN OIL WASHING CAR - SUHAM

SOME OF OUR FEW VIP PROJECT

CONSTRUCCTION OFF CHAMICAL BULK STORAGE SOHAR PORT

AL AHLI CONVERING INDUSTRIES CO. S.A.O.C. - SOHAR

LULU AMRAT

ALPHA FISHCO LLC - DUQUM

CHAINA MALL SOHAR OMAN

CITY CENTER SOHAR

CITY CENTER ALQURAM

LULU - DARSAID

SOME OF OUR FEW VIP PROJECT

OMAN OIL WASHING CAR STATION - BUSHAR

CARREFOUR - SEEB

CARREFOR AL KHOD

AUDI SITUATION - GALA

BARKA MARINE DEVELOPMENT

AL SAADA CITY MALL - SALALAH

KHAZAEN WAREHOUSE

POULTRY FRAM AT HAIMA, ALGHAFTAIN FOR M/S OSOOL POULTRY S.A.O.C

SOME OF OUR FEW VIP PROJECT

AL KHLAEEJ GRAND MILLS

AL ANWAR CERAMIC TILES CO SAOG

OMAN REFRESHMENT CO. SAOG

SOME OF OUR FEW VIP PROJECT

ROB CERTIFICATOIN

سلطنة عمان
الهيئة العامة للدفاع المدني والإسعاف
الإدارة العامة للحماية المدنية

رقم الشهادة(هـ . ع . د. م . إ / حماية / ٠١١٥/٢٠٢١م)

شهادة مطابقة للمعدات والأجهزة والمواد الخاصة بالحماية المدنية للمواصفات القياسية

تشهد الإدارة العامة للحماية المدنية بأن الأجهزة والمعدات والمواد المبينة أدناه :

١- ابواب حديدية مقاومة للحريق لمدة(١٢٠-٢٤٠)دقيقة

٢- رقم الشهادة(Intertek(WHI٢٠-٢٨٨٧٣٩٠٥

٣- (Intertek(WHI١٧-٢٨٨٧٣٩٠٣)(WHI٢٠-٢٨٨٧٣٩٠٤

المصنعة من قبل : انتاج للاعمال المدنية والخشبية-الامارات ، وقد تم فحصها من قبل مختبرات دولية معتمدة لدينا.

وعليه يصرح للوكيل المحلي : المجد للتقنية والمشاريع تضامنية ، باستيرادها والإتجار فيها.

هذه الشهادة صالحة اعتباراً من :١٩/٠٤/٢٠٢١م إلى : ١٨/٠٤/٢٠٢٤م

القائم بالدراسة : الرقيب/ أسامه بن عبدالله الأخزمي

عن

الرائد / أحمد بن ناصر الكنجدي
عن / مدير عام الحماية المدنية

أي كشط أو تعديل يلغي هذه الشهادة.

ملاحظات :

* يجب تجديد هذه الشهادة عند إنتهاء المدة المحددة دون تأخير .

THANK YOU