VGA 640x480p60

Prepared by: Mustafa Tamer EL-Sherif

Abstract:

This project presents the design and implementation of a VGA controller for the **640×480 resolution at 60 Hz**. The main objective is to generate the correct horizontal and vertical synchronization signals required by a VGA monitor, along with valid pixel timing for the visible display area. The design is based on standard VGA timing specifications, including the pixel clock, sync pulse widths, porches, and active video intervals. The implemented system is suitable for digital IC or FPGA-based realization and can serve as a foundation for more advanced image or graphics display systems. The project demonstrates the practical use of synchronous digital design concepts in a real display interface application.

Introduction:

VGA, which stands for Video Graphics Array, is one of the most widely used analog display standards for monitors and embedded display applications. Even though newer display technologies are now common, VGA remains an important standard in digital IC design because it is simple, well-defined, and useful for learning timing generation, counters, and display control logic.

The **640×480p60** mode is a standard VGA format in which 640 pixels are displayed horizontally and 480 lines vertically at a refresh rate of 60 frames per second. To make a monitor display a stable image, the controller must generate accurate synchronization signals and follow the exact timing requirements of the standard.

This project focuses on designing a VGA signal generator that produces the correct timing for this resolution. The work includes horizontal and vertical counters, synchronization logic, visible-area detection, and output control for RGB signals. The result is a complete digital timing solution that can be synthesized and tested on hardware.

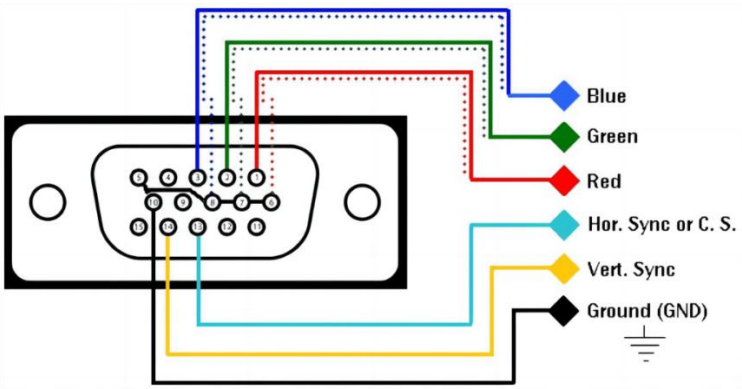

Prepared by: Mustafa Tamer EL-Sherif

Objective:

- Generate a valid VGA signal for a standard monitor.
- Create the correct timing for **640×480 at 60 Hz.**
- Produce the **HSYNC** and **VSYNC** signals.
- Detect the visible screen area.
- Output RGB values only when the screen is actively displaying pixels.
- Allow the design to be tested on hardware or in simulation.

VGA Timing Summary

Important Terminologies:

- Pixel Clock: Time passed for one pixel to be implemented (Unit Time / Pixel) .
- TMDS Clock: Serialization for DVI and HDMI; Out of our project scope.
- Pixel Time: Can be represented by $\frac{1}{Pixel\ Clock}$.
- Line Time: Time to draw one full scan line (Visible + Blank).
- Frame Time: Time to draw one whole frame. Can be represented by $(Line\ Time) \times (Number\ of\ lines)$.
- Vertical Frequency: Can be represented by $\frac{1}{Frame\ Time}$.

Timing Standards:

Please follow the specifications provided in the following link for the VGA 640x480p60.

- ➔ Video Timings: VGA, 720p, 1080p - Project F

- ➔ Follow the following time diagram in your design notice that it differs than the one presented in the link however this is normal if you don't understand why, feel free to ask any of the instructors.

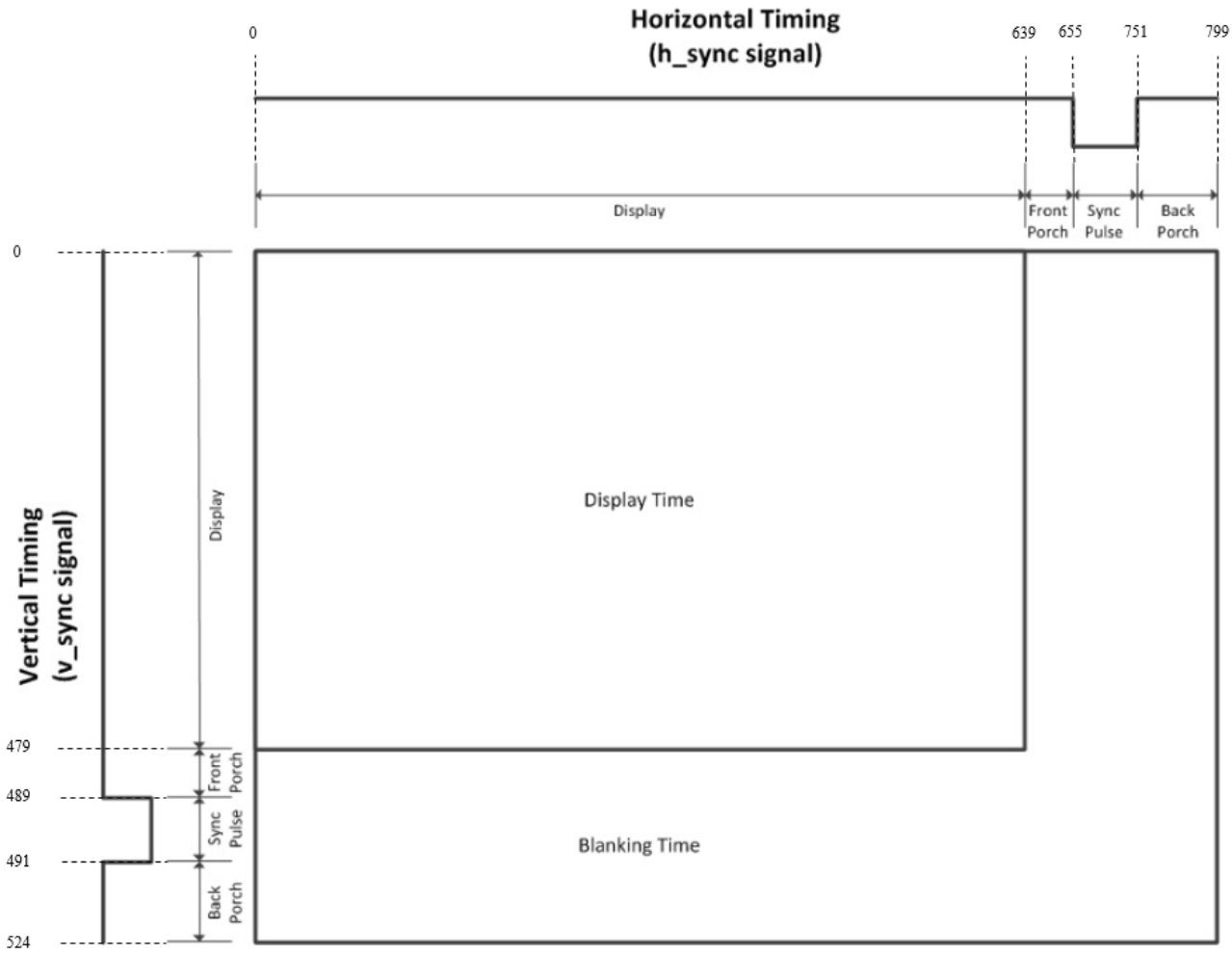

Design Overview:

Architecture:

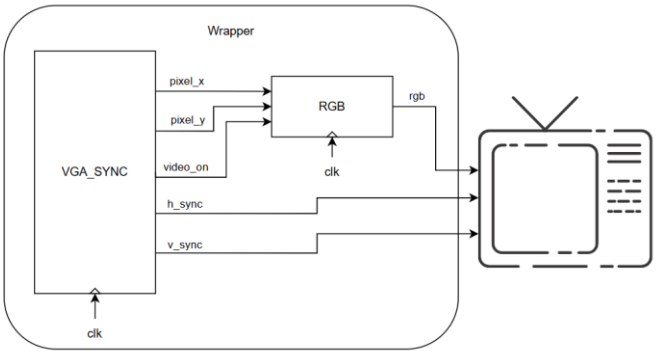

Signals & Parameters:

➔ You can freely add more parameters.

Name	Type	Width	Comment
clk	Signal	1	System Clock
rstn	Signal	1	System active low asynchronous reset
addr	Signal	-	You should calculate the width of the address.
rgb	Signal	BPP	The width should be parameterized with default "8" (3-bits Red, 3-bits Green & 2-bits Blue)
h_sync	Signal	1	-
V_sync	Signal	1	-
Video_on	Signal	1	Not in standard however useful in internal logic and during debug.
H_ACTIVE	Parameter	-	Number of horizontal active region bits
H_FRONT_PORCH	Parameter	-	Number of horizontal front porch region bits
H_SYNC_PORCH	Parameter	-	Number of horizontal synch region bits
H_BACK_PORCH	Parameter	-	Number of horizontal back porch region bits
V_ACTIVE	Parameter	-	Number of vertical active region bits
V_FRONT_PORCH	Parameter	-	Number of vertical front porch region bits
V_SYNC_PORCH	Parameter	-	Number of vertical synch region bits
V_BACK_PORCH	Parameter	-	Number of vertical back porch region bits
BPP	Parameter	-	Number of bits of the "rgb" signal width

References & Recommended Resources:

1- World's worst video card? The exciting conclusion (Part 1)
2- World's worst video card? The exciting conclusion (Part 2)
3- IEEE ASUSB Digital S3 Project 1 (VGA Controller SPECS)