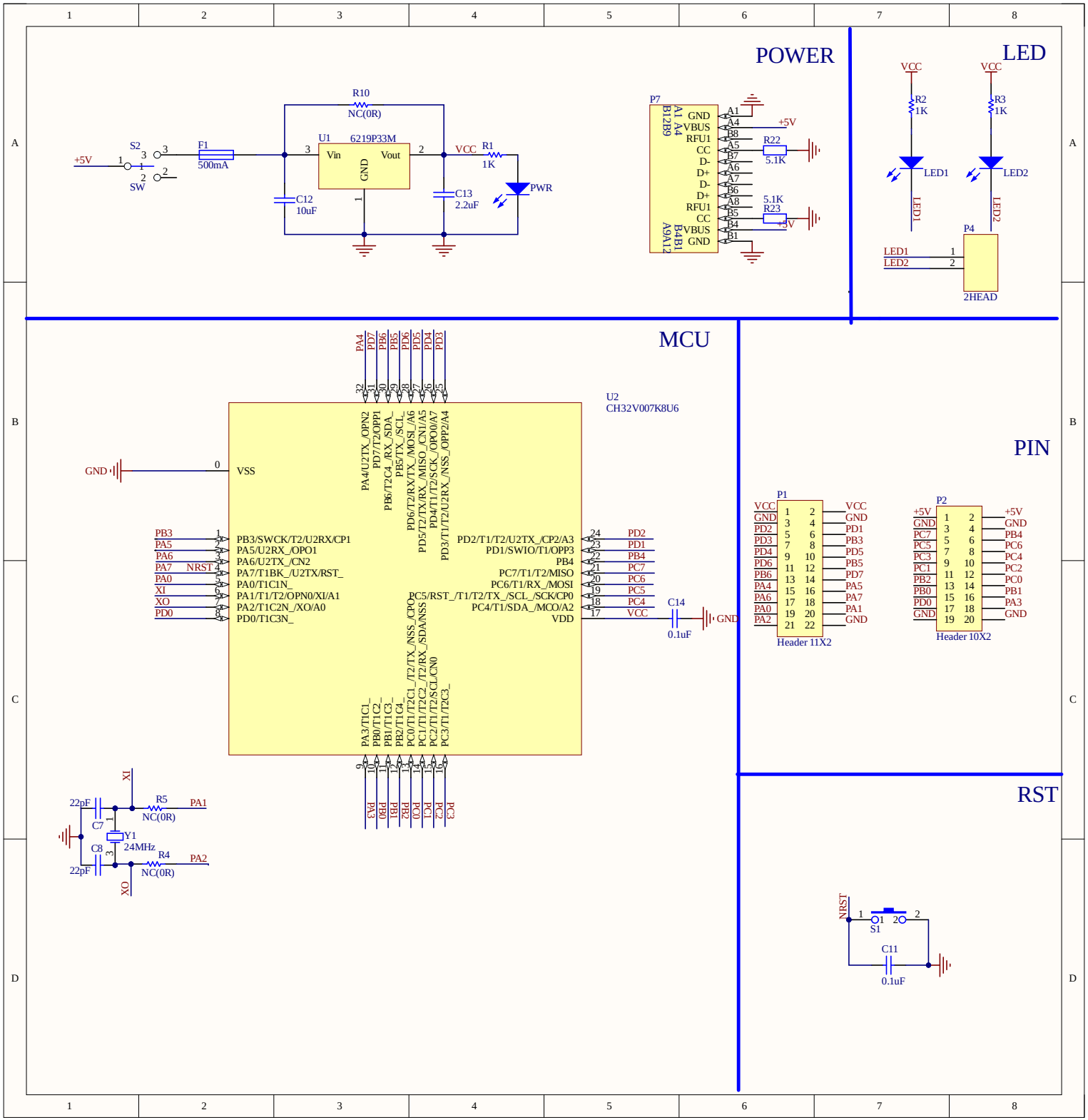
POWER
LED
MCU
PIN
RST
R10
NC(0R)
S2
SW
+5V
F1
500mA
U1
6219P33M
Vin
Vout
GND
VCC
R1
1K
C12
10uF
C13
2.2uF
PWR
P7
GND
VBUS
RFU1
CC
D-
D+
A1 A4
B12B9
B4B1
A9A12
R22
5.1K
R23
R2
1K
R3
1K
LED1
LED2
P4
2HEAD
U2
CH32V007K8U6
VSS
PB3/SWCK/T2/U2RX/CP1
PA5/U2RX_/OPO1
PA6/U2TX_/CN2
PA7/T1BK_/U2TX/RST_
PA0/T1C1N_
PA1/T1/T2/OPN0/XI/A1
PA2/T1C2N_/XO/A0
PD0/T1C3N_
PD2/T1/T2/U2TX_/CP2/A3
PD1/SWIO/T1/OPP3
PB4
PC7/T1/T2/MISO
PC6/T1/RX_/MOSI
PC5/RST_/T1/T2/TX_/SCL_/SCK/CP0
PC4/T1/SDA_/MCO/A2
VDD
C14
0.1uF
NRST
XI
XO
R5
NC(0R)
R4
NC(0R)
C7
C8
22pF
Y1
24MHz
P1
Header 11X2
P2
Header 10X2
S1
C11
0.1uF

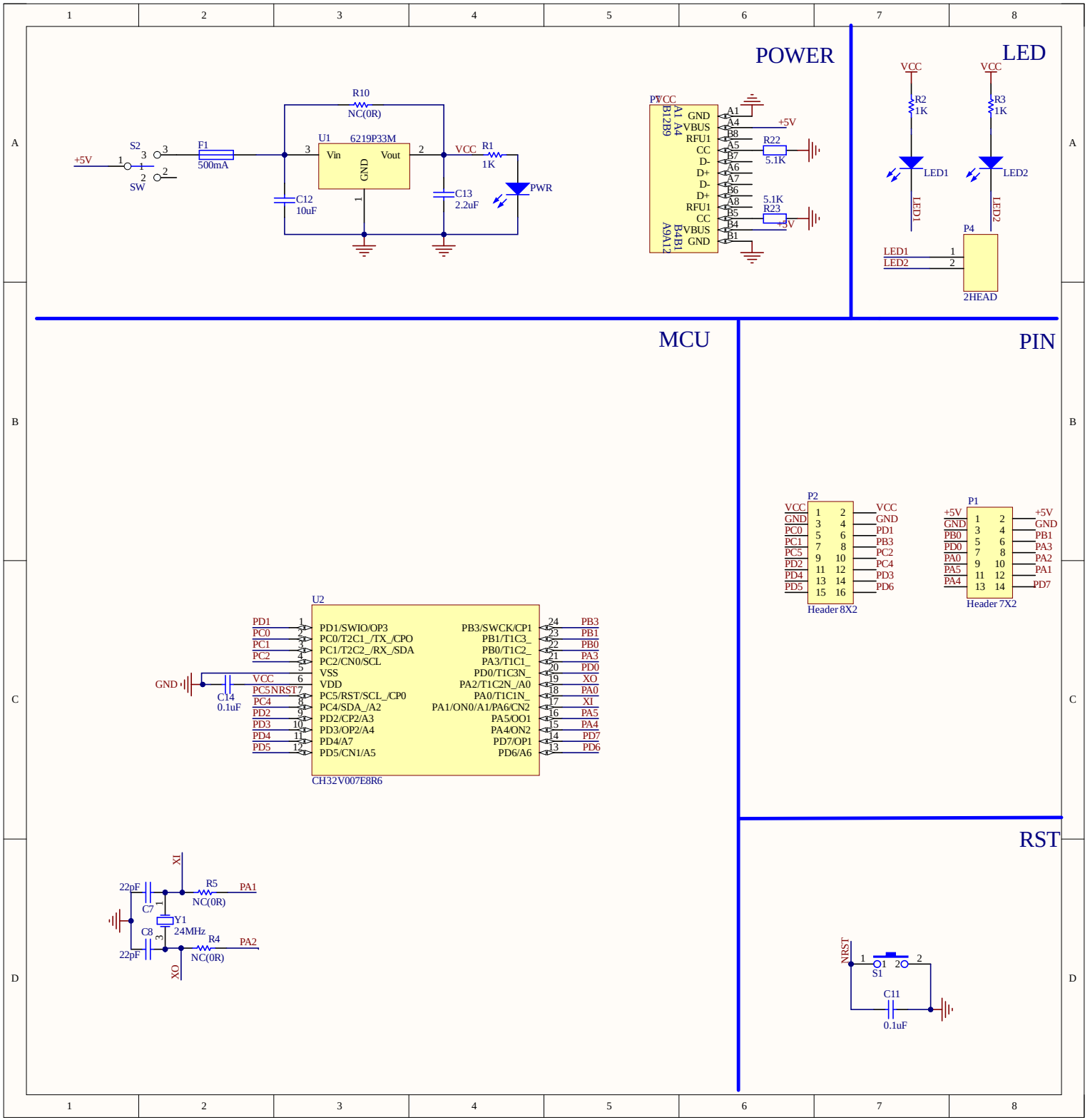
POWER
LED
MCU
PIN
RST
R10
NC(0R)
U1
6219P33M
Vin
Vout
GND
S2
SW
+5V
F1
500mA
VCC
R1
1K
C12
10uF
C13
2.2uF
PWR
P7
VCC
GND
VBUS
RFU1
CC
D-
D+
B12B9
A1 A4
B4B1
A9A12
R22
5.1K
R23
R2
1K
R3
1K
LED1
LED2
P4
2HEAD
U2
CH32V007E8R6
PD1/SWIO/OP3
PC0/T2C1_/TX_/CPO
PC1/T2C2_/RX_/SDA
PC2/CN0/SCL
VSS
VDD
PC5/RST/SCL_/CP0
PC4/SDA_/A2
PD2/CP2/A3
PD3/OP2/A4
PD4/A7
PD5/CN1/A5
PB3/SWCK/CP1
PB1/T1C3_
PB0/T1C2_
PA3/T1C1_
PD0/T1C3N_
PA2/T1C2N_/A0
PA0/T1C1N_
PA1/ON0/A1/PA6/CN2
PA5/OO1
PA4/ON2
PD7/OP1
PD6/A6
C14
0.1uF
P2
Header 8X2
P1
Header 7X2
XI
XO
22pF
C7
C8
Y1
24MHz
R5
R4
PA1
PA2
NRST
S1
C11
0.1uF

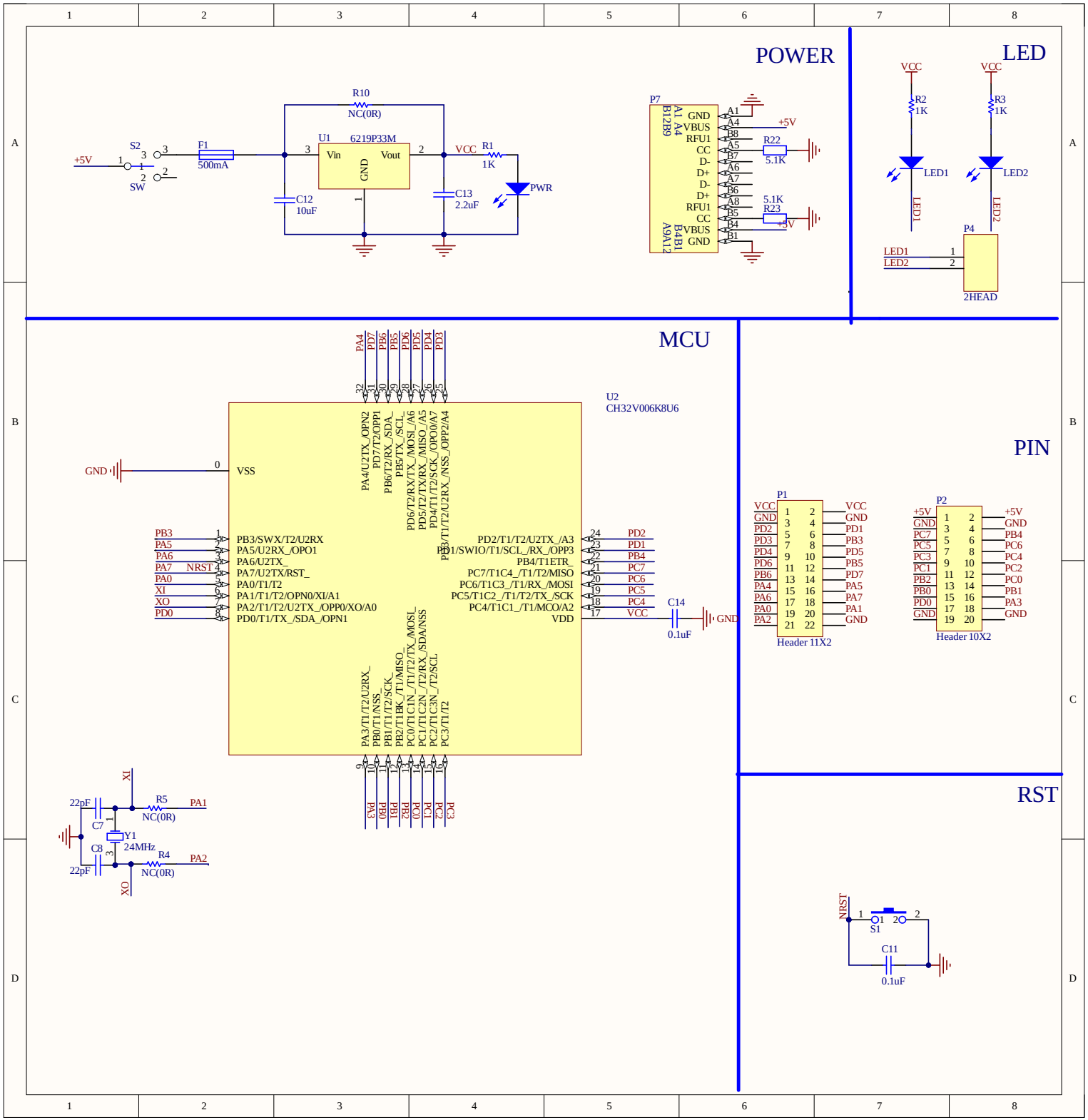
POWER
R10
NC(0R)
S2
SW
+5V
F1
500mA
U1
6219P33M
Vin
Vout
GND
VCC
R1
1K
C12
10uF
C13
2.2uF
PWR
P7
GND
VBUS
RFU1
CC
D-
D+
D-
D+
RFU1
CC
VBUS
GND
R22
5.1K
R23
5.1K
LED
VCC
R2
1K
R3
1K
LED1
LED2
P4
2HEAD
MCU
U2
CH32V006K8U6
VSS
PB3/SWX/T2/U2RX
PA5/U2RX_/OPO1
PA6/U2TX_
PA7/U2TX/RST_
PA0/T1/T2
PA1/T1/T2/OPN0/XI/A1
PA2/T1/T2/U2TX_/OPP0/XO/A0
PD0/T1/TX_/SDA_/OPN1
PD2/T1/T2/U2TX_/A3
PD1/SWIO/T1/SCL_/RX_/OPP3
PB4/T1ETR_
PC7/T1C4_/T1/T2/MISO
PC6/T1C3_/T1/RX_/MOSI
PC5/T1C2_/T1/T2/TX_/SCK
PC4/T1C1_/T1/MCO/A2
VDD
C14
0.1uF
XI
XO
R5
NC(0R)
R4
NC(0R)
C7
C8
22pF
Y1
24MHz
PIN
P1
Header 11X2
P2
Header 10X2
RST
NRST
S1
C11
0.1uF

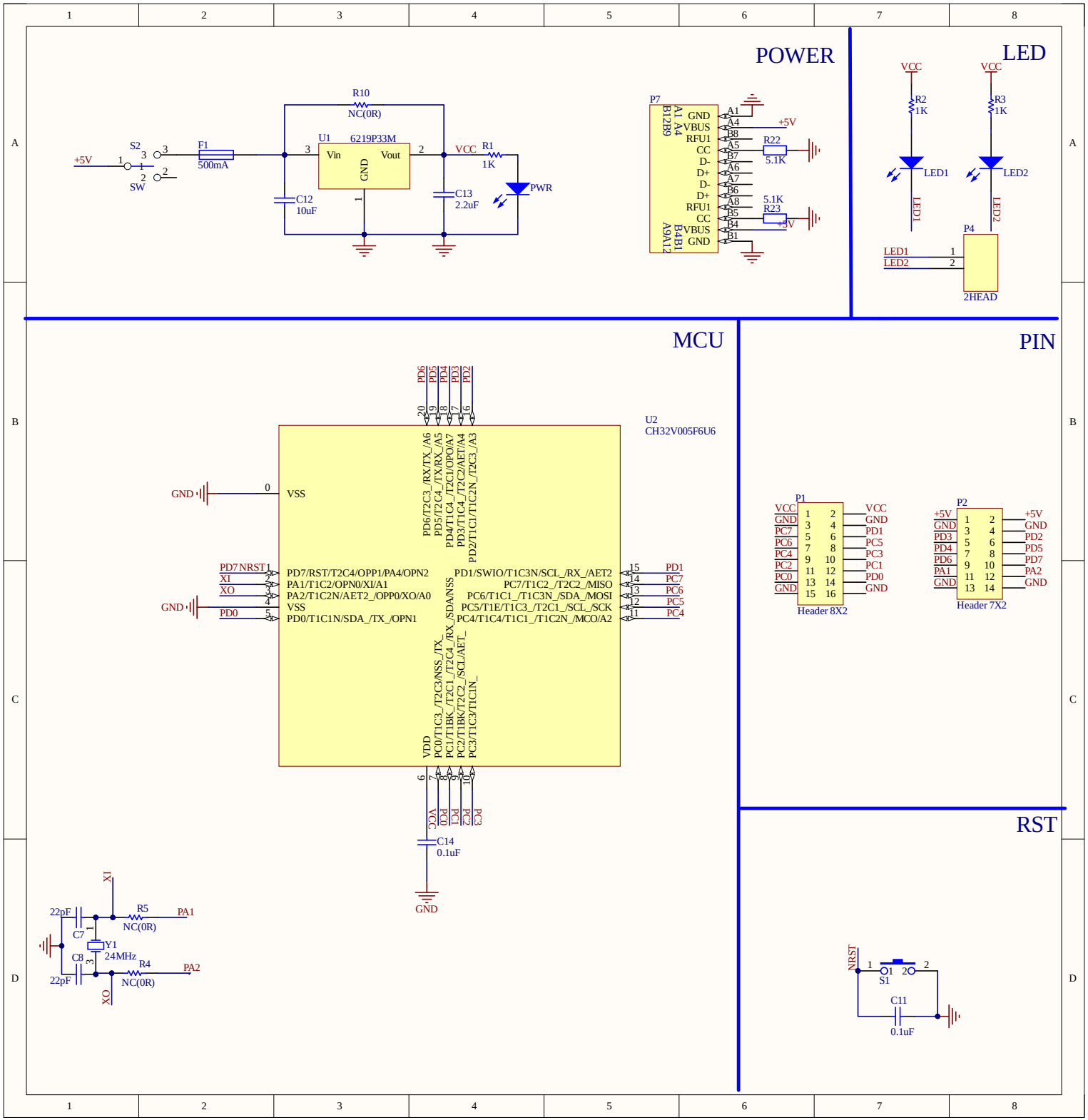
POWER
R10
NC(0R)
U1
6219P33M
Vin
Vout
GND
+5V
S2
SW
F1
500mA
VCC
R1
1K
PWR
C12
10uF
C13
2.2uF
P7
GND
VBUS
RFU1
CC
D-
D+
D-
D+
RFU1
CC
VBUS
GND
A1 A4
B12B9
B4B1
A9A12
R22
5.1K
R23
5.1K
LED
VCC
R2
1K
R3
1K
LED1
LED2
P4
2HEAD
MCU
U2
CH32V005F6U6
VSS
PD7/RST/T2C4/OPP1/PA4/OPN2
PA1/T1C2/OPN0/XI/A1
PA2/T1C2N/AET2_/OPP0/XO/A0
VSS
PD0/T1C1N/SDA_/TX_/OPN1
PD1/SWIO/T1C3N/SCL_/RX_/AET2
PC7/T1C2_/T2C2_/MISO
PC6/T1C1_/T1C3N_/SDA_/MOSI
PC5/T1E/T1C3_/T2C1_/SCL_/SCK
PC4/T1C4/T1C1_/T1C2N_/MCO/A2
PD6/T2C3_/RX/TX_/A6
PD5/T2C4_/TX/RX_/A5
PD4/T1C4_/T2C1/OPO/A7
PD3/T1C4_/T2C2/AET/A4
PD2/T1C1/T1C2N_/T2C3_/A3
PC0/T1C3_/T2C3/NSS_/TX_
PC1/T1BK_/T2C1_/T2C4_/RX_/SDA/NSS
PC2/T1BK/T2C2_/SCL/AET_
PC3/T1C3/T1C1N_
VDD
C14
0.1uF
GND
XI
XO
R5
NC(0R)
R4
NC(0R)
PA1
PA2
C7
C8
22pF
Y1
24MHz
PIN
P1
Header 8X2
P2
Header 7X2
RST
NRST
S1
C11
0.1uF

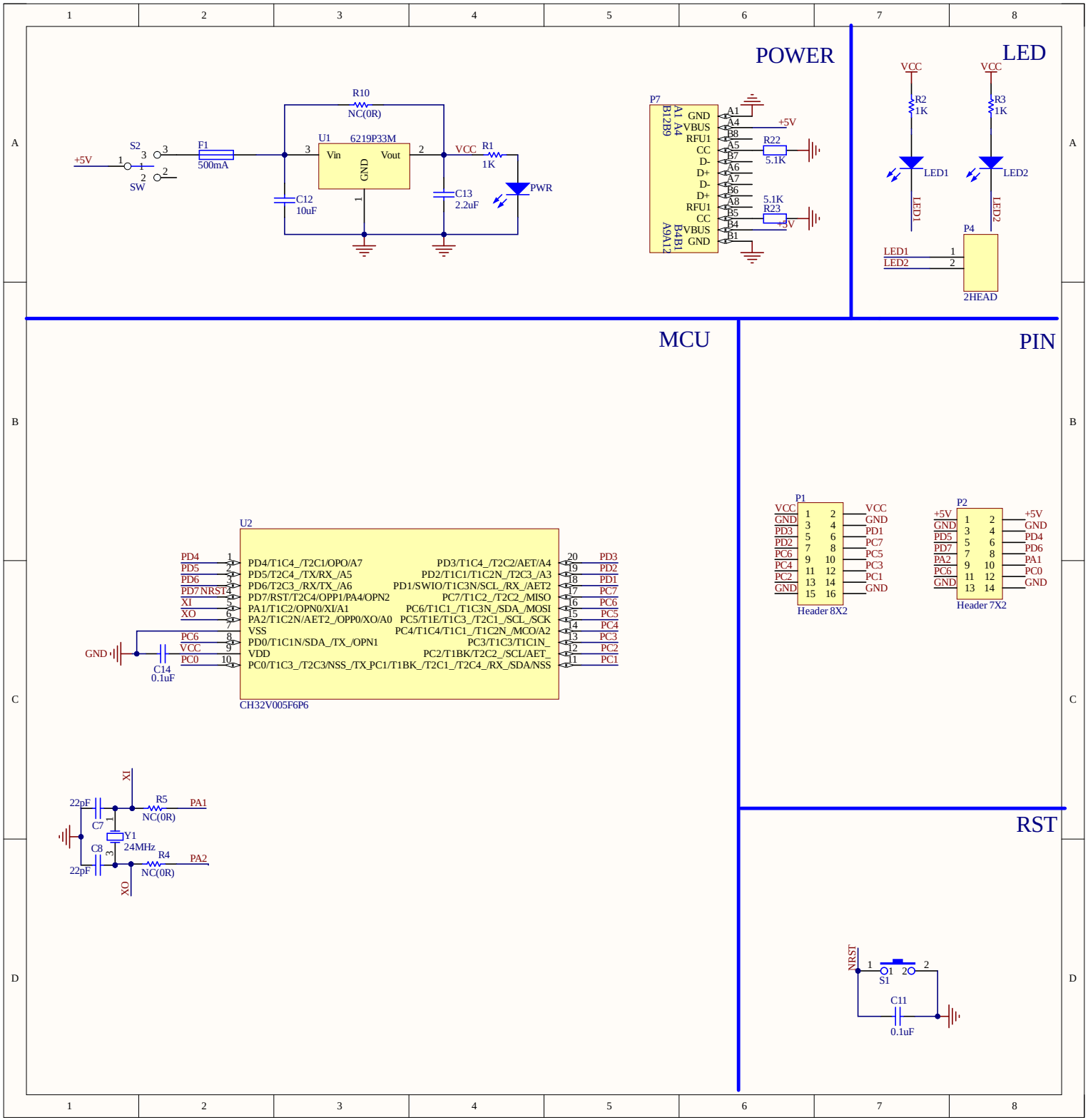
POWER
LED
MCU
PIN
RST
R10
NC(0R)
S2
SW
+5V
F1
500mA
U1
6219P33M
Vin
Vout
GND
VCC
R1
1K
C12
10uF
C13
2.2uF
PWR
P7
GND
VBUS
RFU1
CC
D-
D+
R22
5.1K
R23
5.1K
VCC
R2
1K
R3
1K
LED1
LED2
P4
2HEAD
U2
CH32V005F6P6
PD4/T1C4_/T2C1/OPO/A7
PD5/T2C4_/TX/RX_/A5
PD6/T2C3_/RX/TX_/A6
PD7/RST/T2C4/OPP1/PA4/OPN2
PA1/T1C2/OPN0/XI/A1
PA2/T1C2N/AET2_/OPP0/XO/A0
VSS
PD0/T1C1N/SDA_/TX_/OPN1
VDD
PC0/T1C3_/T2C3/NSS_/TX_PC1/T1BK_/T2C1_/T2C4_/RX_/SDA/NSS
PD3/T1C4_/T2C2/AET/A4
PD2/T1C1/T1C2N_/T2C3_/A3
PD1/SWIO/T1C3N/SCL_/RX_/AET2
PC7/T1C2_/T2C2_/MISO
PC6/T1C1_/T1C3N_/SDA_/MOSI
PC5/T1E/T1C3_/T2C1_/SCL_/SCK
PC4/T1C4/T1C1_/T1C2N_/MCO/A2
PC3/T1C3/T1C1N_
PC2/T1BK/T2C2_/SCL/AET_
PC1
C14
0.1uF
22pF
C7
C8
Y1
24MHz
R5
NC(0R)
R4
NC(0R)
PA1
PA2
XI
XO
P1
Header 8X2
P2
Header 7X2
NRST
S1
C11
0.1uF

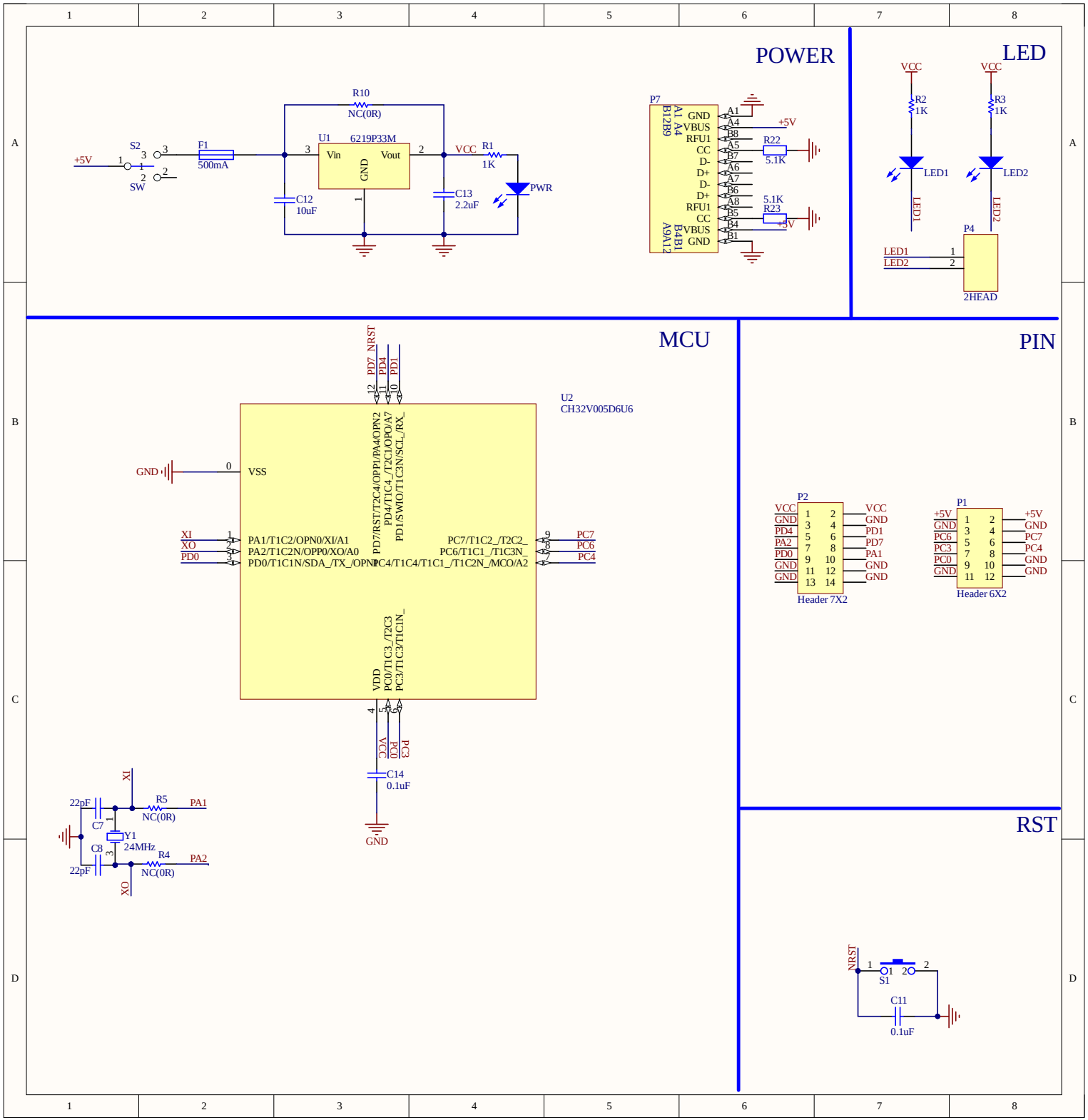
POWER
R10
NC(0R)
U1
6219P33M
Vin
Vout
GND
+5V
S2
SW
F1
500mA
VCC
R1
1K
C12
10uF
C13
2.2uF
PWR
P7
GND
VBUS
RFU1
CC
D-
D+
RFU1
CC
VBUS
GND
A1 A4
B12B9
B4B1
A9A12
R22
5.1K
R23
5.1K
LED
VCC
R2
1K
R3
1K
LED1
LED2
P4
2HEAD
MCU
U2
CH32V005D6U6
NRST
PD7
PD4
PD1
VSS
GND
XI
XO
PD0
PA1/T1C2/OPN0/XI/A1
PA2/T1C2N/OPP0/XO/A0
PD0/T1C1N/SDA_/TX_/OPN
PD7/RST/T2G4/OPP1/PA4/OPN2
PD4/T1C4_/T2C1/OPO/A7
PD1/SWIO/T1C3N/SCL_/RX_
PC7/T1C2_/T2C2_
PC6/T1C1_/T1C3N_
PC4/T1C4/T1C1_/T1C2N_/MCO/A2
PC7
PC6
PC4
VDD
PC0/T1C3_/T2C3
PC3/T1C3/T1C1N_
VCC
PC0
PC3
C14
0.1uF
GND
22pF
C7
C8
Y1
24MHz
R5
NC(0R)
R4
NC(0R)
PA1
PA2
PIN
P2
Header 7X2
P1
Header 6X2
RST
S1
C11
0.1uF

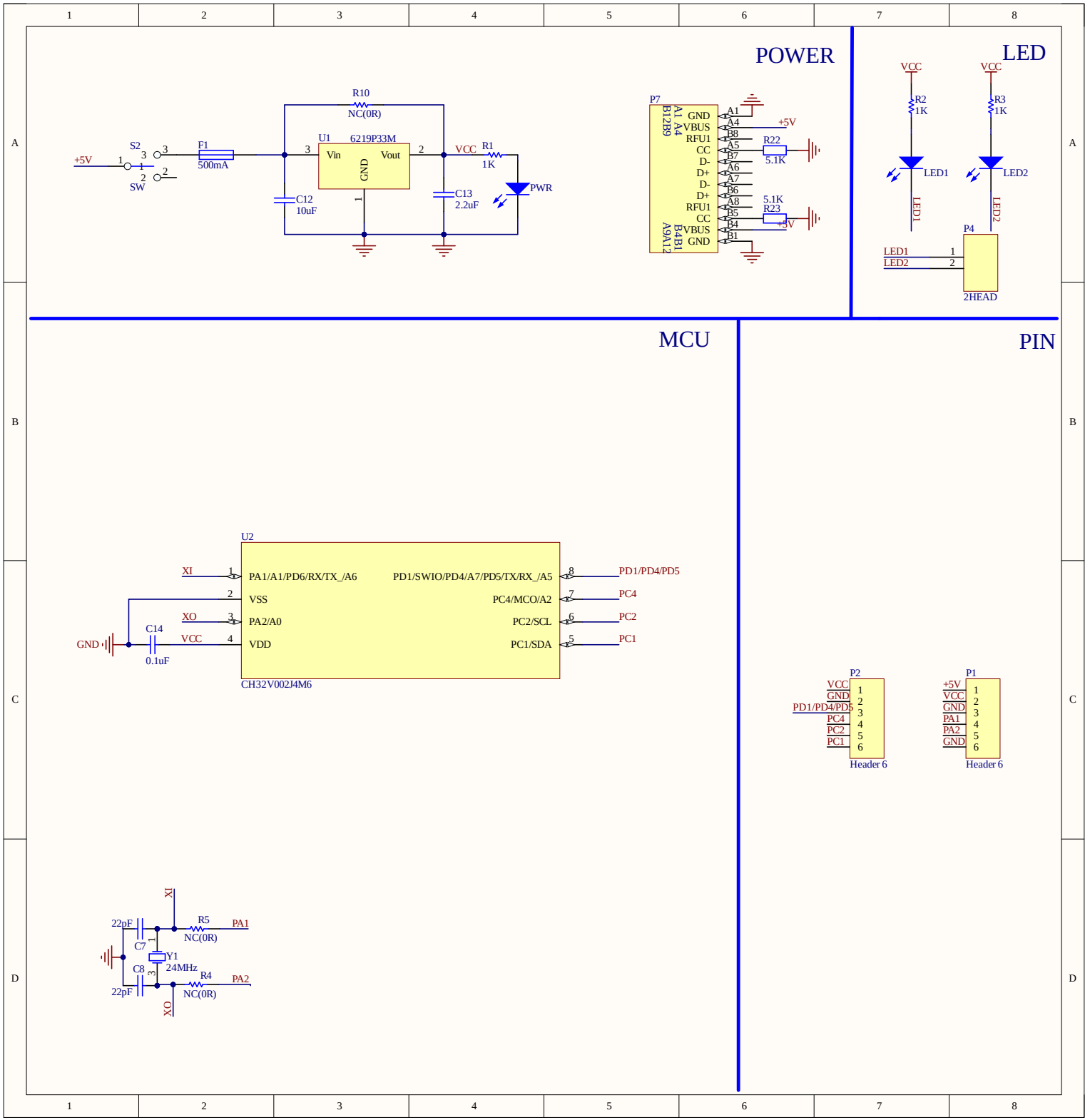
POWER
LED
MCU
PIN
R10
NC(0R)
U1
6219P33M
Vin
Vout
GND
S2
SW
+5V
F1
500mA
VCC
R1
1K
C12
10uF
C13
2.2uF
PWR
P7
GND
VBUS
RFU1
CC
D-
D+
RFU1
CC
VBUS
GND
R22
5.1K
R23
5.1K
VCC
R2
1K
R3
1K
LED1
LED2
P4
2HEAD
U2
XI
XO
GND
C14
0.1uF
PA1/A1/PD6/RX/TX_/A6
VSS
PA2/A0
VDD
PD1/SWIO/PD4/A7/PD5/TX/RX_/A5
PC4/MCO/A2
PC2/SCL
PC1/SDA
PD1/PD4/PD5
PC4
PC2
PC1
CH32V002J4M6
22pF
C7
C8
Y1
24MHz
R5
NC(0R)
R4
NC(0R)
PA1
PA2
P2
Header 6
P1
Header 6

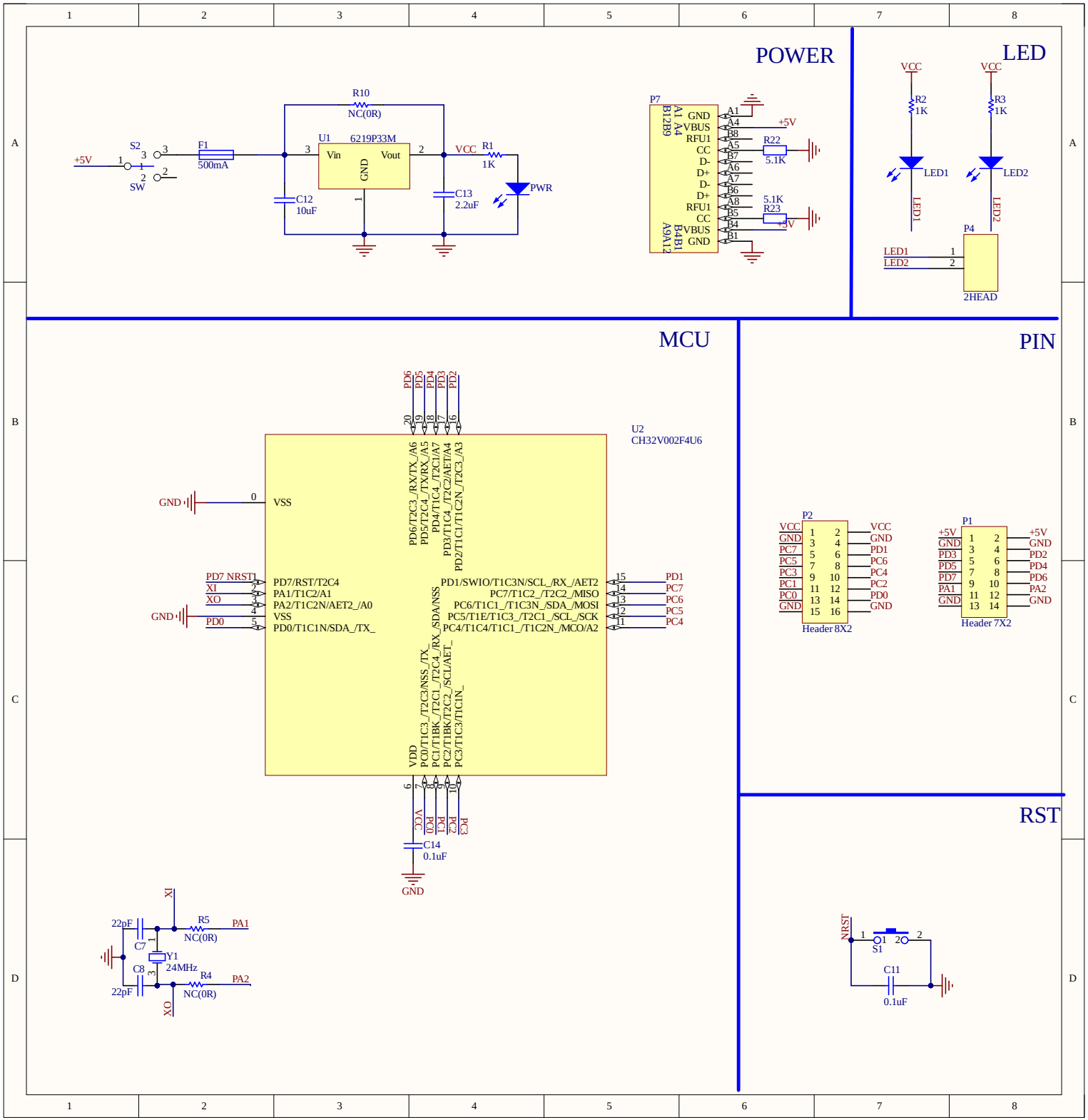
POWER
LED
MCU
PIN
RST
+5V
S2
SW
F1
500mA
R10
NC(0R)
U1
6219P33M
Vin
Vout
GND
VCC
R1
1K
C12
10uF
C13
2.2uF
PWR
P7
GND
VBUS
RFU1
CC
D-
D+
A1 A4
B12B9
B4B1
A9A12
R22
5.1K
R23
VCC
R2
1K
R3
1K
LED1
LED2
P4
2HEAD
U2
CH32V002F4U6
VSS
PD7 NRST
XI
XO
PD0
PD7/RST/T2C4
PA1/T1C2/A1
PA2/T1C2N/AET2_/A0
PD0/T1C1N/SDA_/TX_
PD1/SWIO/T1C3N/SCL_/RX_/AET2
PC7/T1C2_/T2C2_/MISO
PC6/T1C1_/T1C3N_/SDA_/MOSI
PC5/T1E/T1C3_/T2C1_/SCL_/SCK
PC4/T1C4/T1C1_/T1C2N_/MCO/A2
PD1
PC7
PC6
PC5
PC4
VDD
C14
0.1uF
22pF
C7
C8
Y1
24MHz
R5
NC(0R)
R4
NC(0R)
PA1
PA2
P2
Header 8X2
P1
Header 7X2
NRST
S1
C11
0.1uF

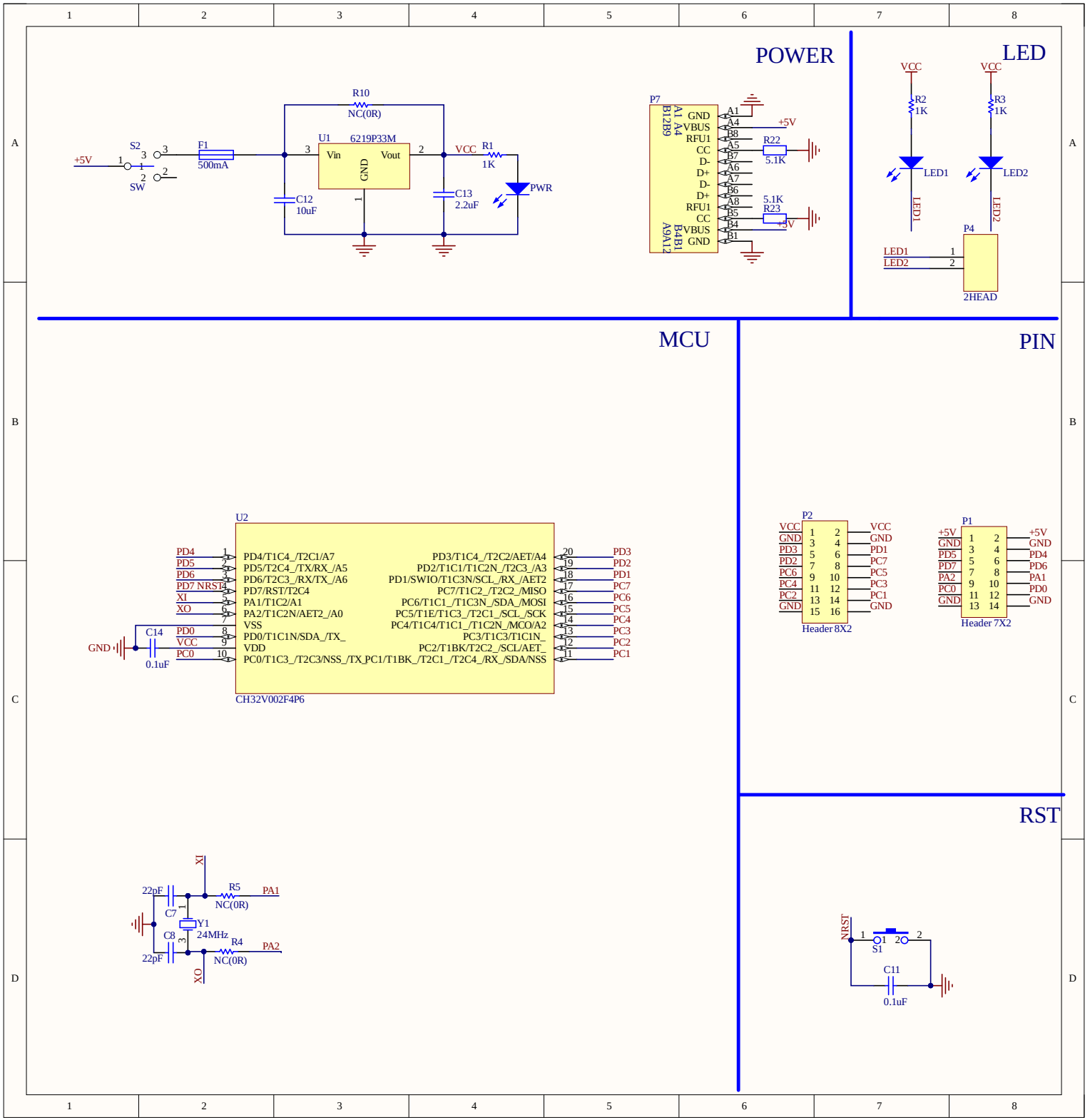
POWER
LED
MCU
PIN
RST
R10
NC(0R)
S2
SW
+5V
F1
500mA
U1
6219P33M
Vin
Vout
GND
VCC
R1
1K
PWR
C12
10uF
C13
2.2uF
P7
GND
VBUS
RFU1
CC
D-
D+
D-
D+
RFU1
CC
VBUS
GND
R22
5.1K
R23
5.1K
+5V
VCC
R2
1K
R3
1K
LED1
LED2
P4
2HEAD
U2
PD4/T1C4_/T2C1/A7
PD5/T2C4_/TX/RX_/A5
PD6/T2C3_/RX/TX_/A6
PD7/RST/T2C4
PA1/T1C2/A1
PA2/T1C2N/AET2_/A0
VSS
PD0/T1C1N/SDA_/TX_
VDD
PC0/T1C3_/T2C3/NSS_/TX_PC1/T1BK_/T2C1_/T2C4_/RX_/SDA/NSS
PD3/T1C4_/T2C2/AET/A4
PD2/T1C1/T1C2N_/T2C3_/A3
PD1/SWIO/T1C3N/SCL_/RX_/AET2
PC7/T1C2_/T2C2_/MISO
PC6/T1C1_/T1C3N_/SDA_/MOSI
PC5/T1E/T1C3_/T2C1_/SCL_/SCK
PC4/T1C4/T1C1_/T1C2N_/MCO/A2
PC3/T1C3/T1C1N_
PC2/T1BK/T2C2_/SCL/AET_
PC1
CH32V002F4P6
C14
0.1uF
GND
P2
Header 8X2
P1
Header 7X2
XI
XO
R5
NC(0R)
R4
NC(0R)
PA1
PA2
22pF
C7
C8
Y1
24MHz
NRST
S1
C11
0.1uF

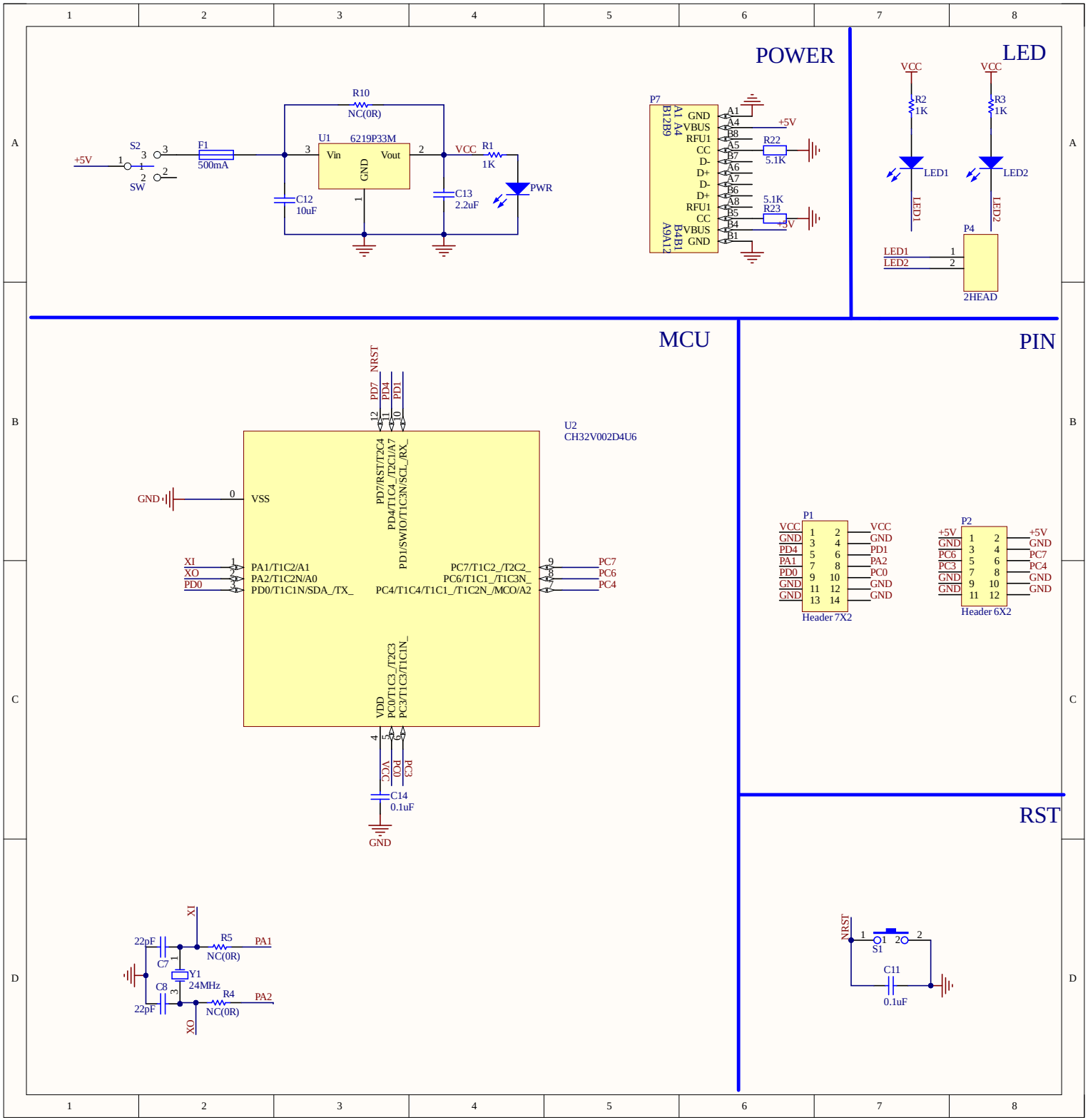
POWER
LED
MCU
PIN
RST
+5V
S2
SW
F1
500mA
R10
NC(0R)
U1
6219P33M
Vin
Vout
GND
VCC
R1
1K
C12
10uF
C13
2.2uF
PWR
P7
GND
VBUS
RFU1
CC
D-
D+
D-
D+
RFU1
CC
VBUS
GND
R22
5.1K
R23
5.1K
VCC
R2
1K
R3
1K
LED1
LED2
P4
2HEAD
U2
CH32V002D4U6
NRST
PD7
PD4
PD1
VSS
PD7/RST/T2C4
PD4/T1C4_/T2C1/A7
PD1/SWIO/T1C3N/SCL_/RX_
XI
XO
PD0
PA1/T1C2/A1
PA2/T1C2N/A0
PD0/T1C1N/SDA_/TX_
PC7/T1C2_/T2C2_
PC6/T1C1_/T1C3N_
PC4/T1C4/T1C1_/T1C2N_/MCO/A2
PC7
PC6
PC4
VDD
PC0/T1C3_/T2C3
PC3/T1C3/T1C1N_
C14
0.1uF
22pF
C7
C8
Y1
24MHz
R5
NC(0R)
R4
NC(0R)
PA1
PA2
P1
Header 7X2
P2
Header 6X2
S1
C11
0.1uF

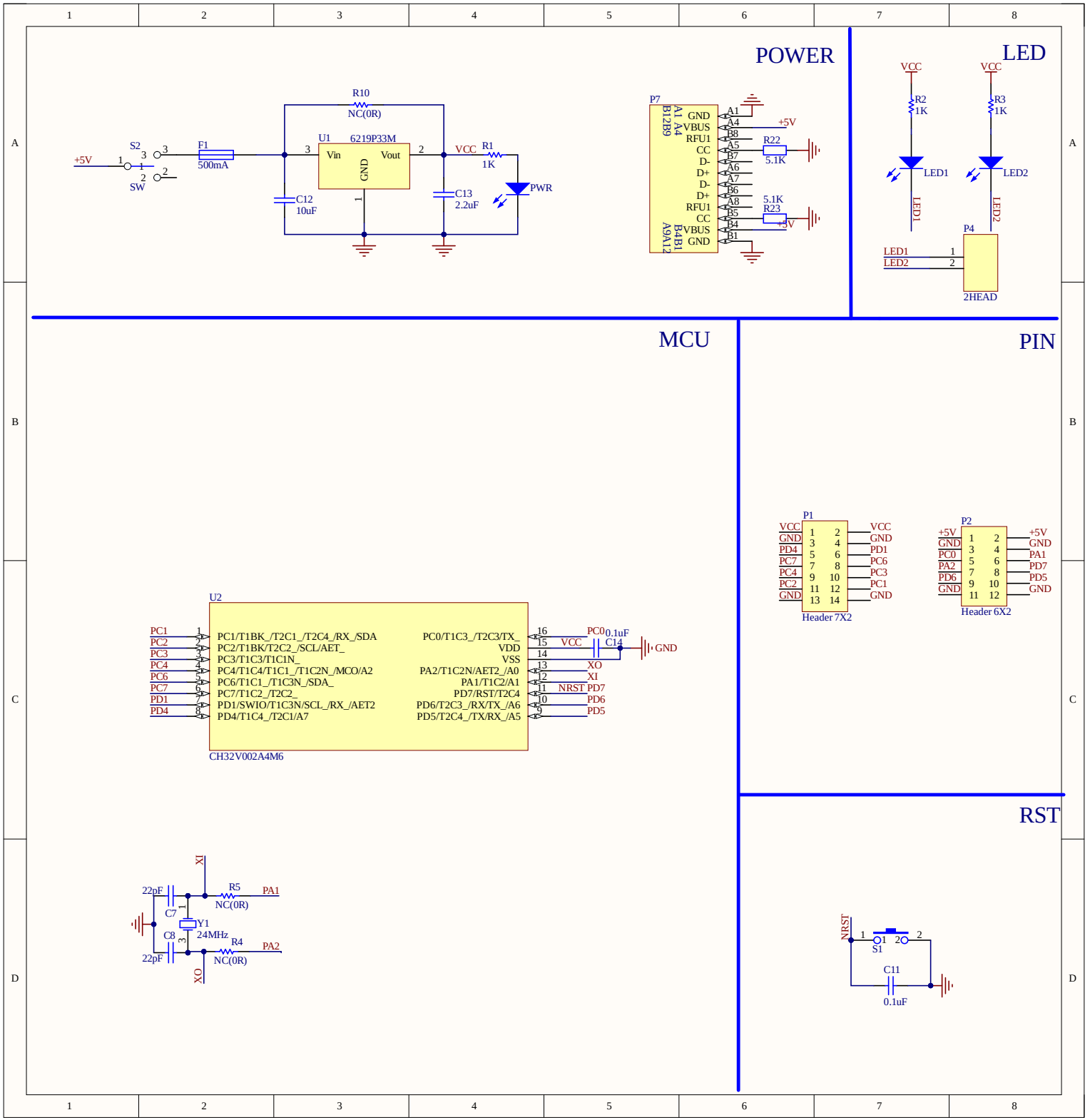
POWER
LED
MCU
PIN
RST
R10
NC(0R)
U1
6219P33M
Vin
Vout
GND
S2
SW
+5V
F1
500mA
VCC
R1
1K
PWR
C12
10uF
C13
2.2uF
P7
GND
VBUS
RFU1
CC
D-
D+
R22
5.1K
R23
VCC
R2
1K
R3
1K
LED1
LED2
P4
2HEAD
U2
CH32V002A4M6
PC1/T1BK_/T2C1_/T2C4_/RX_/SDA
PC2/T1BK/T2C2_/SCL/AET_
PC3/T1C3/T1C1N_
PC4/T1C4/T1C1_/T1C2N_/MCO/A2
PC6/T1C1_/T1C3N_/SDA_
PC7/T1C2_/T2C2_
PD1/SWIO/T1C3N/SCL_/RX_/AET2
PD4/T1C4_/T2C1/A7
PC0/T1C3_/T2C3/TX_
VDD
VSS
PA2/T1C2N/AET2_/A0
PA1/T1C2/A1
PD7/RST/T2C4
PD6/T2C3_/RX/TX_/A6
PD5/T2C4_/TX/RX_/A5
C14
0.1uF
XI
XO
NRST
PD7
PD6
PD5
PA1
PA2
R5
NC(0R)
R4
NC(0R)
C7
22pF
C8
22pF
Y1
24MHz
P1
Header 7X2
P2
Header 6X2
S1
C11
0.1uF