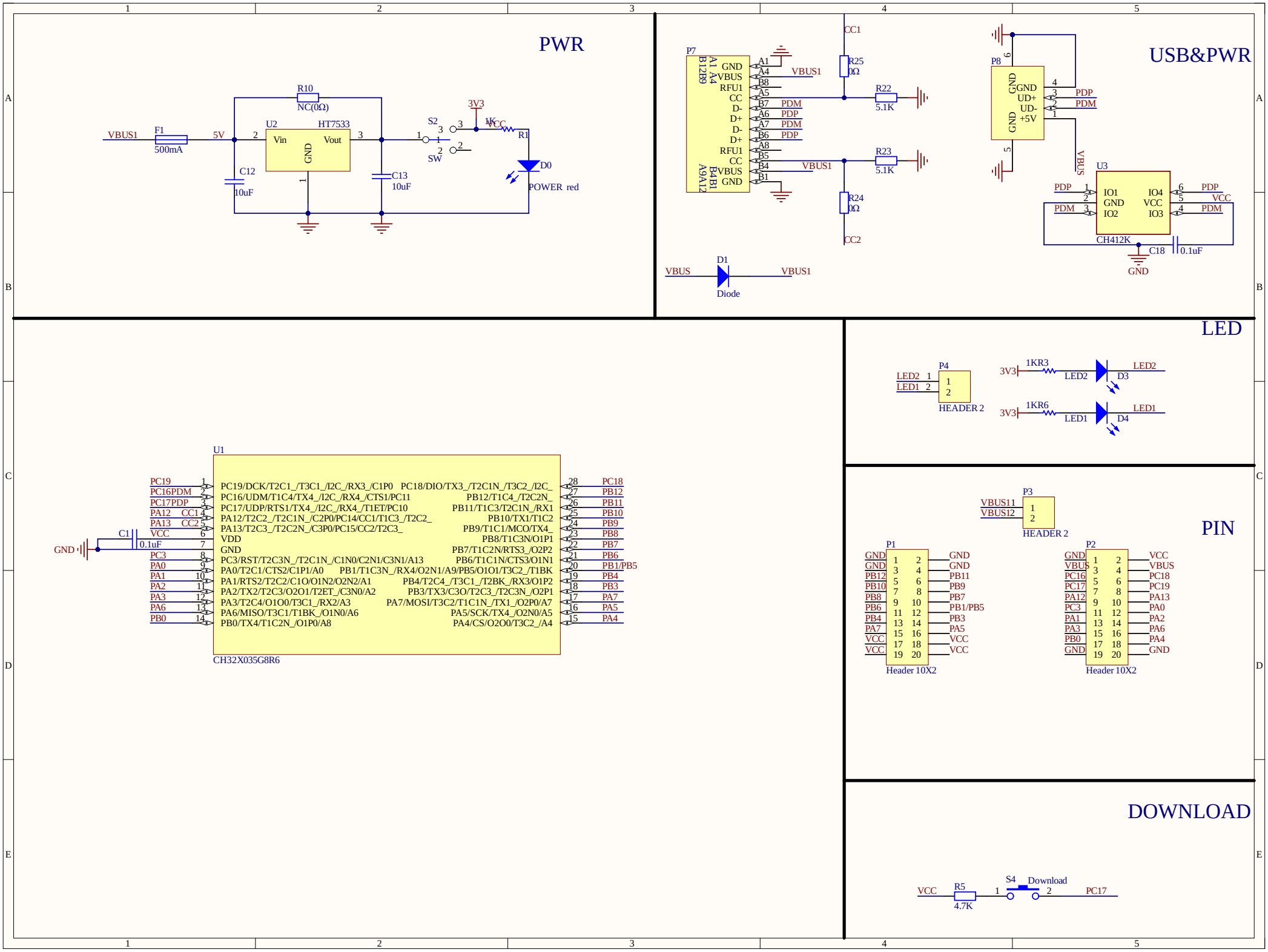
PWR
VBUS1
F1
500mA
5V
R10
NC(0Ω)
U2
HT7533
Vin
Vout
GND
C12
10uF
C13
10uF
S2
SW
3V3
1K
VCC
R1
D0
POWER red
USB&PWR
P7
GND
VBUS
RFU1
CC
D-
D+
D-
D+
RFU1
CC
VBUS
GND
A1 A4
B12B9
B4B1
A9A12
VBUS1
PDM
PDM
PDM
PDP
PDP
PDP
CC1
R25
0Ω
R22
5.1K
R23
5.1K
R24
0Ω
CC2
VBUS1
D1
VBUS
Diode
P8
GND
GND
GGND
UD+
UD-
+5V
PDP
PDM
VBUS
U3
IO1
GND
IO2
IO4
VCC
IO3
PDP
PDM
PDP
VCC
PDM
CH412K
C18
0.1uF
GND
LED
P4
LED2
LED1
HEADER 2
3V3
1KR3
LED2
D3
3V3
1KR6
LED1
D4
U1
CH32X035G8R6
PC19
PC16PDM
PC17PDP
PA12 CC1
PA13 CC2
VCC
PC3
PA0
PA1
PA2
PA3
PA6
PB0
PC19/DCK/T2C1_/T3C1_/I2C_/RX3_/C1P0
PC16/UDM/T1C4/TX4_/I2C_/RX4_/CTS1/PC11
PC17/UDP/RTS1/TX4_/I2C_/RX4_/T1ET/PC10
PA12/T2C2_/T2C1N_/C2P0/PC14/CC1/T1C3_/T2C2_
PA13/T2C3_/T2C2N_/C3P0/PC15/CC2/T2C3_
VDD
GND
PC3/RST/T2C3N_/T2C1N_/C1N0/C2N1/C3N1/A13
PA0/T2C1/CTS2/C1P1/A0
PA1/RTS2/T2C2/C1O/O1N2/O2N2/A1
PA2/TX2/T2C3/O2O1/T2ET_/C3N0/A2
PA3/T2C4/O1O0/T3C1_/RX2/A3
PA6/MISO/T3C1/T1BK_/O1N0/A6
PB0/TX4/T1C2N_/O1P0/A8
PC18/DIO/TX3_/T2C1N_/T3C2_/I2C_
PB12/T1C4_/T2C2N_
PB11/T1C3/T2C1N_/RX1
PB10/TX1/T1C2
PB9/T1C1/MCO/TX4_
PB8/T1C3N/O1P1
PB7/T1C2N/RTS3_/O2P2
PB6/T1C1N/CTS3/O1N1
PB1/T1C3N_/RX4/O2N1/A9/PB5/O1O1/T3C2_/T1BK
PB4/T2C4_/T3C1_/T2BK_/RX3/O1P2
PB3/TX3/C3O/T2C3_/T2C3N_/O2P1
PA7/MOSI/T3C2/T1C1N_/TX1_/O2P0/A7
PA5/SCK/TX4_/O2N0/A5
PA4/CS/O2O0/T3C2_/A4
PC18
PB12
PB11
PB10
PB9
PB8
PB7
PB6
PB1/PB5
PB4
PB3
PA7
PA5
PA4
C1
0.1uF
GND
PIN
P3
VBUS11
VBUS12
HEADER 2
P1
GND
GND
PB12
PB10
PB8
PB6
PB4
PA7
VCC
VCC
GND
GND
PB11
PB9
PB7
PB1/PB5
PB3
PA5
VCC
VCC
Header 10X2
P2
GND
VBUS
PC16
PC17
PA12
PC3
PA1
PA3
PB0
GND
VCC
VBUS
PC18
PC19
PA13
PA0
PA2
PA6
PA4
GND
Header 10X2
DOWNLOAD
VCC
R5
4.7K
S4
Download
PC17

PIN

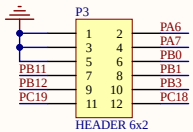

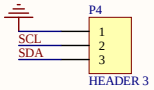

POWER

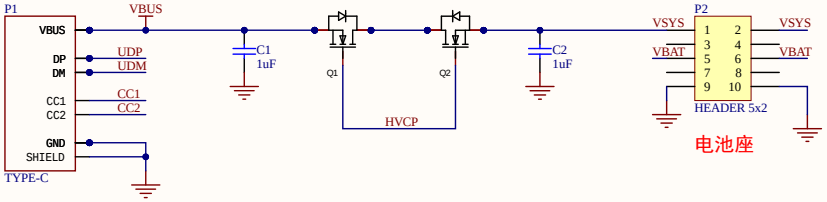

LED

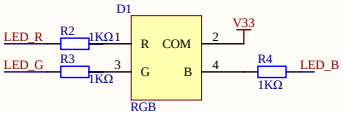

KEY

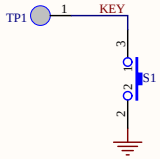

ADC

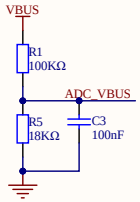

MCU

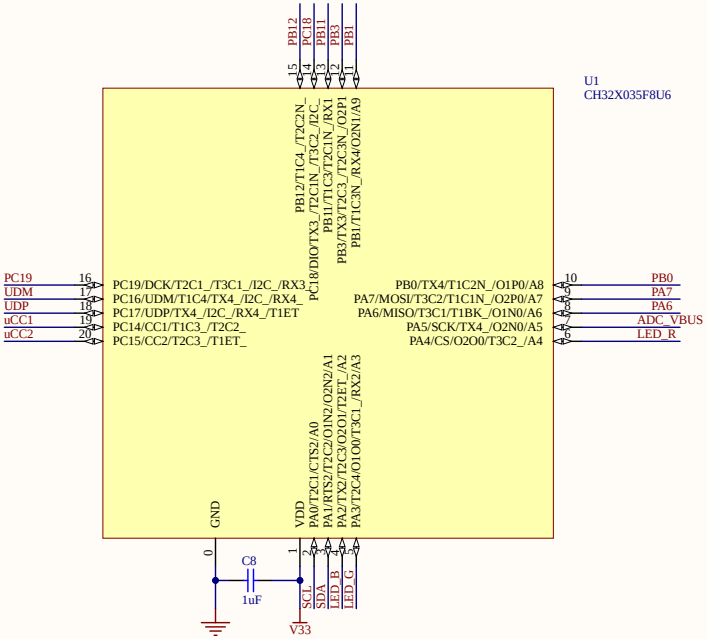

CH211

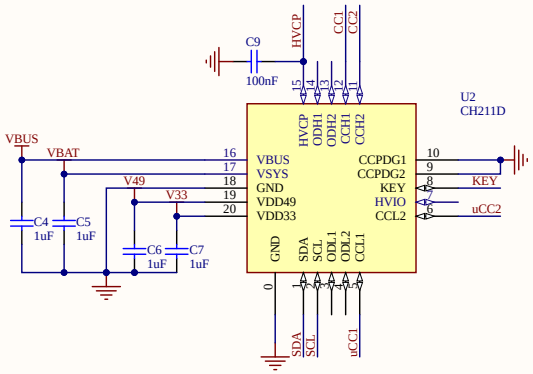

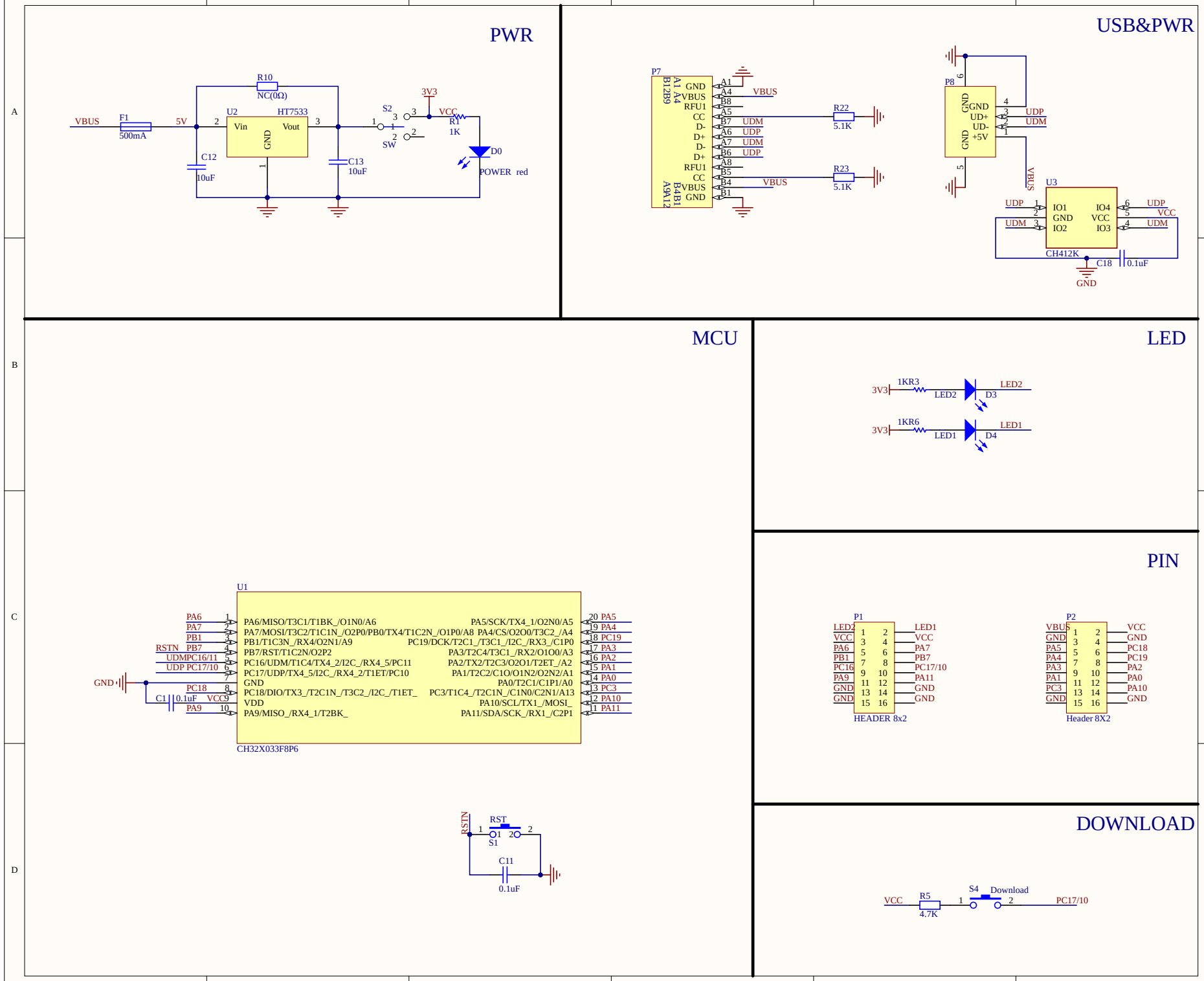
PWR
VBUS
F1
500mA
5V
R10
NC(0Ω)
U2
HT7533
Vin
Vout
GND
C12
10uF
C13
10uF
S2
SW
3V3
VCC
R1
1K
D0
POWER red
USB&PWR
P7
B12B9
A1 A4
GND
VBUS
RFU1
CC
D-
D+
D-
D+
RFU1
CC
VBUS
GND
A9A12
B4B1
VBUS
UDM
UDP
UDM
UDP
VBUS
R22
5.1K
R23
5.1K
P8
GND
UD+
UD-
+5V
UDP
UDM
VBUS
U3
IO1
GND
IO2
IO4
VCC
IO3
CH412K
C18
0.1uF
GND
MCU
U1
PA6/MISO/T3C1/T1BK_/O1N0/A6
PA7/MOSI/T3C2/T1C1N_/O2P0/PB0/TX4/T1C2N_/O1P0/A8
PB1/T1C3N_/RX4/O2N1/A9
PB7/RST/T1C2N/O2P2
PC16/UDM/T1C4/TX4_2/I2C_/RX4_5/PC11
PC17/UDP/TX4_5/I2C_/RX4_2/T1ET/PC10
GND
PC18/DIO/TX3_/T2C1N_/T3C2_/I2C_/T1ET_
VDD
PA9/MISO_/RX4_1/T2BK_
PA5/SCK/TX4_1/O2N0/A5
PA4/CS/O2O0/T3C2_/A4
PC19/DCK/T2C1_/T3C1_/I2C_/RX3_/C1P0
PA3/T2C4/T3C1_/RX2/O1O0/A3
PA2/TX2/T2C3/O2O1/T2ET_/A2
PA1/T2C2/C1O/O1N2/O2N2/A1
PA0/T2C1/C1P1/A0
PC3/T1C4_/T2C1N_/C1N0/C2N1/A13
PA10/SCL/TX1_/MOSI_
PA11/SDA/SCK_/RX1_/C2P1
PA6
PA7
PB1
RSTN PB7
UDM PC16/11
UDP PC17/10
PC18
PA9
VCC
PA5
PA4
PC19
PA3
PA2
PA1
PA0
PC3
PA10
PA11
GND
C1
0.1uF
CH32X033F8P6
RST
S1
RSTN
C11
0.1uF
LED
3V3
1KR3
LED2
D3
1KR6
LED1
D4
PIN
P1
LED2
VCC
PA6
PB1
PC16
PA9
GND
GND
LED1
VCC
PA7
PB7
PC17/10
PA11
GND
GND
HEADER 8x2
P2
VBUS
GND
PA5
PA4
PA3
PA1
PC3
GND
VCC
GND
PC18
PC19
PA2
PA0
PA10
GND
Header 8X2
DOWNLOAD
VCC
R5
4.7K
S4
Download
PC17/10

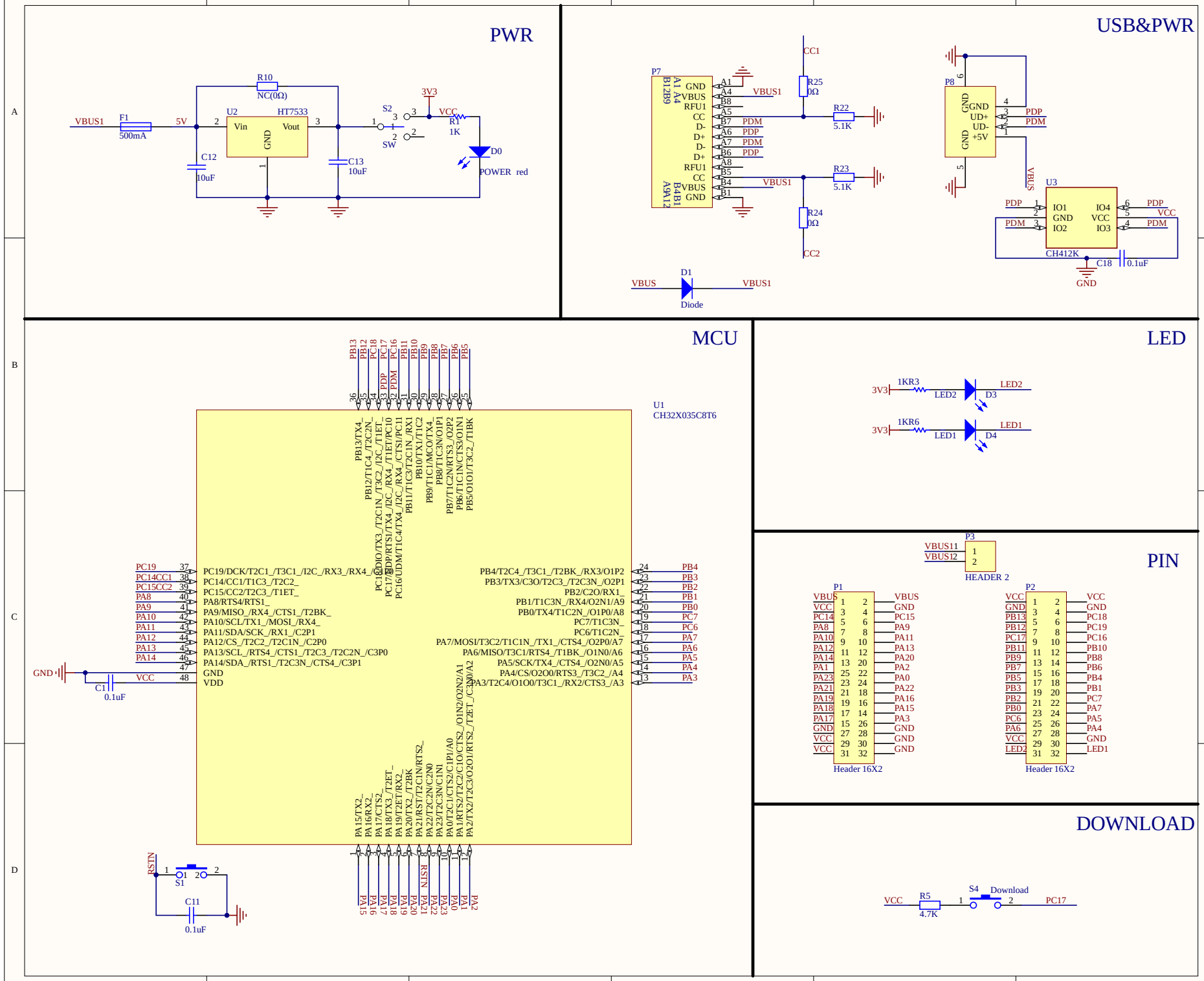
PWR
VBUS1
F1
500mA
5V
R10
NC(0Ω)
U2
HT7533
Vin
Vout
GND
C12
10uF
C13
10uF
3V3
S2
SW
VCC
R1
1K
D0
POWER red
USB&PWR
P7
GND
VBUS
RFU1
CC
D-
D+
D-
D+
RFU1
CC
VBUS
GND
A1 A4
B12B9
B4B1
A9A12
PDM
PDP
PDM
PDP
VBUS1
VBUS1
CC1
R25
0Ω
R22
5.1K
R23
5.1K
R24
0Ω
CC2
VBUS
D1
Diode
VBUS1
P8
GND
UD+
UD-
+5V
PDP
PDM
VBUS
U3
IO1
GND
IO2
IO4
VCC
IO3
CH412K
C18
0.1uF
GND
MCU
U1
CH32X035C8T6
PB13
PB12
PC18
PC17
PC16
PB11
PB10
PB9
PB8
PB7
PB6
PB5
PDP
PDM
PB13/TX4_
PB12/T1C4_/T2C2N_
PC18/DIO/TX3_/T2C1N_/T2C2_/I2C_/T1ET_
PC17/PDP/RTS1/TX4_/I2C_/RX4_/CTS1/PC11
PC16/UDM/T1C4/TX4_/I2C_/RX4_/CTS1/PC11
PB11/T1C3/T2C1N_/RX1
PB10/TX1/T1C2
PB9/T1C1/MCO/TX4_
PB8/T1C3N/O1P1
PB7/T1C2N/RTS3_/O2P2
PB6/T1C1N/CTS3/O1N1
PB5/O1O1/T3C2_/T1BK
PC19
PC14CC1
PC15CC2
PA8
PA9
PA10
PA11
PA12
PA13
PA14
GND
VCC
PC19/DCK/T2C1_/T3C1_/I2C_/RX3_/RX4_/
PC14/CC1/T1C3_/T2C2_
PC15/CC2/T2C3_/T1ET_
PA8/RTS4/RTS1_
PA9/MISO_/RX4_/CTS1_/T2BK_
PA10/SCL/TX1_/MOSI_/RX4_
PA11/SDA/SCK_/RX1_/C2P1
PA12/CS_/T2C2_/T2C1N_/C2P0
PA13/SCL_/RTS4_/CTS1_/T2C3_/T2C2N_/C3P0
PA14/SDA_/RTS1_/T2C3N_/CTS4_/C3P1
GND
VDD
C1
0.1uF
PB4/T2C4_/T3C1_/T2BK_/RX3/O1P2
PB3/TX3/C3O/T2C3_/T2C3N_/O2P1
PB2/C2O/RX1_
PB1/T1C3N_/RX4/O2N1/A9
PB0/TX4/T1C2N_/O1P0/A8
PC7/T1C3N_
PC6/T1C2N_
PA7/MOSI/T3C2/T1C1N_/TX1_/CTS4_/O2P0/A7
PA6/MISO/T3C1/RTS4_/T1BK_/O1N0/A6
PA5/SCK/TX4_/CTS4_/O2N0/A5
PA4/CS/O2O0/RTS3_/T3C2_/A4
PA3/T2C4/O1O0/T3C1_/RX2/CTS3_/A3
PB4
PB3
PB2
PB1
PB0
PC7
PC6
PA7
PA6
PA5
PA4
PA3
PA15/TX2_
PA16/RX2_
PA17/CTS2_
PA18/TX3_/T2ET_
PA19/T2ET/RX2_
PA20/TX2_/T2BK
PA21/RST/T2C1N/RTS2_
PA22/T2C2N/C2N0
PA23/T2C3N/C1N1
PA0/T2C1/CTS2/C1P1/A0
PA1/RTS2/T2C2/C1O/CTS2_/O1N2/O2N2/A1
PA2/TX2/T2C3/O2O1/RTS2_/T2ET_/C3P0/A2
RSTN
S1
C11
0.1uF
LED
3V3
1KR3
LED2
D3
3V3
1KR6
LED1
D4
PIN
P3
VBUS11
VBUS12
HEADER 2
P1
VBUS
VCC
PC14
PA8
PA10
PA12
PA14
PA1
PA23
PA21
PA19
PA18
PA17
GND
VCC
VCC
VBUS
GND
PC15
PA9
PA11
PA13
PA20
PA2
PA0
PA22
PA16
PA15
PA3
GND
GND
GND
Header 16X2
P2
VCC
GND
PB13
PB12
PC17
PB11
PB9
PB7
PB5
PB3
PB2
PB0
PC6
PA6
VCC
LED2
VCC
GND
PC18
PC19
PC16
PB10
PB8
PB6
PB4
PB1
PC7
PA7
PA5
PA4
GND
LED1
Header 16X2
DOWNLOAD
VCC
R5
4.7K
S4
Download
PC17

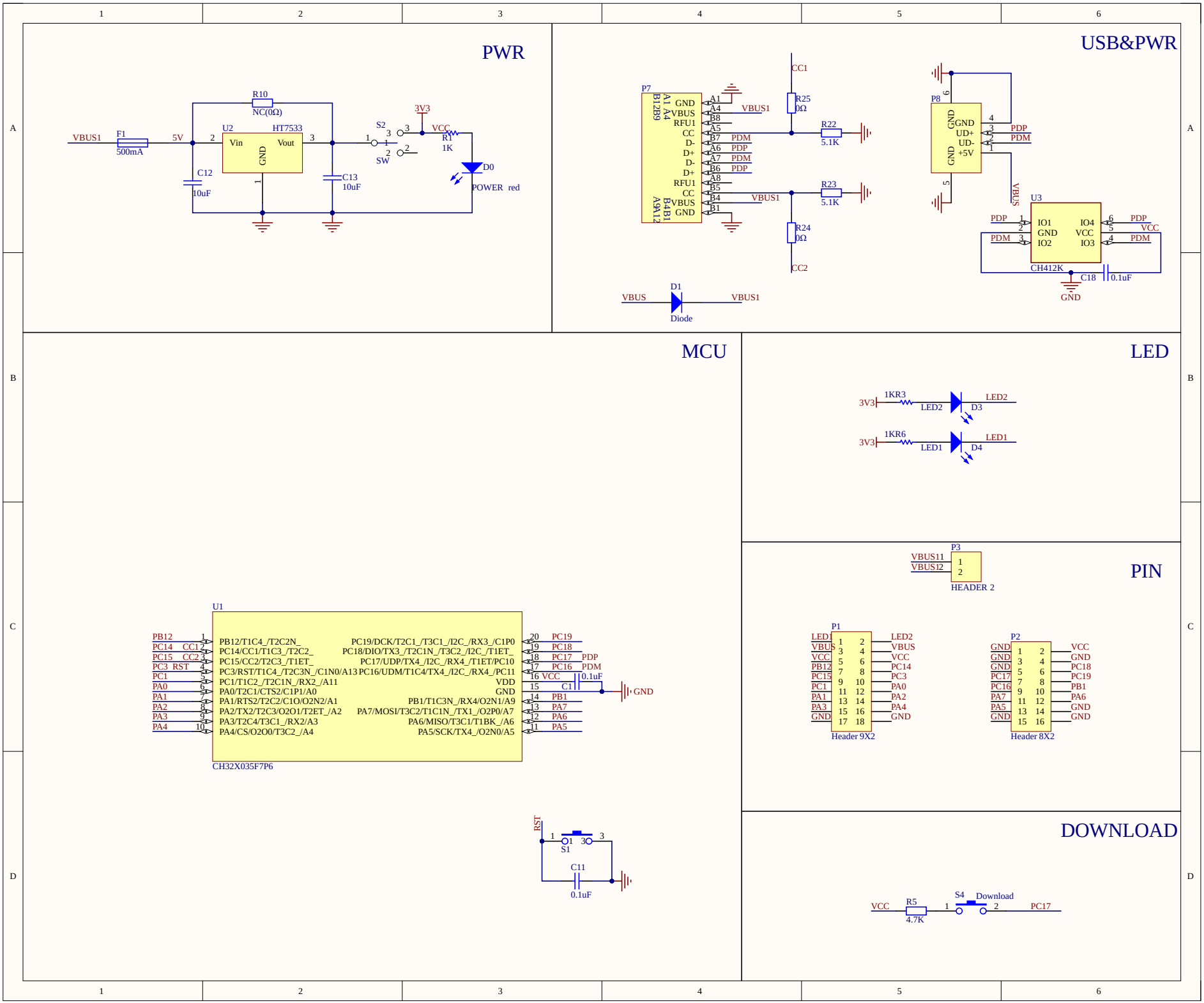
PWR
VBUS1
F1
500mA
5V
R10
NC(0Ω)
U2
HT7533
Vin
Vout
GND
C12
10uF
C13
10uF
3V3
S2
SW
VCC
R1
1K
D0
POWER red
USB&PWR
P7
B12B9
A1 A4
GND
VBUS
RFU1
CC
D-
D+
D-
D+
RFU1
CC
VBUS
GND
A9A12
B4B1
PDM
PDP
PDM
PDP
VBUS1
VBUS1
CC1
R25
0Ω
R22
5.1K
R23
5.1K
R24
0Ω
CC2
VBUS
D1
Diode
VBUS1
P8
GND
UD+
UD-
+5V
PDP
PDM
VBUS
U3
IO1
GND
IO2
IO4
VCC
IO3
PDP
PDM
VCC
PDM
CH412K
C18
0.1uF
GND
MCU
U1
PB12
PC14 CC1
PC15 CC2
PC3 RST
PC1
PA0
PA1
PA2
PA3
PA4
PB12/T1C4_/T2C2N_
PC14/CC1/T1C3_/T2C2_
PC15/CC2/T2C3_/T1ET_
PC3/RST/T1C4_/T2C3N_/C1N0/A13
PC1/T1C2_/T2C1N_/RX2_/A11
PA0/T2C1/CTS2/C1P1/A0
PA1/RTS2/T2C2/C1O/O2N2/A1
PA2/TX2/T2C3/O2O1/T2ET_/A2
PA3/T2C4/T3C1_/RX2/A3
PA4/CS/O2O0/T3C2_/A4
PC19/DCK/T2C1_/T3C1_/I2C_/RX3_/C1P0
PC18/DIO/TX3_/T2C1N_/T3C2_/I2C_/T1ET_
PC17/UDP/TX4_/I2C_/RX4_/T1ET/PC10
PC16/UDM/T1C4/TX4_/I2C_/RX4_/PC11
VDD
GND
PB1/T1C3N_/RX4/O2N1/A9
PA7/MOSI/T3C2/T1C1N_/TX1_/O2P0/A7
PA6/MISO/T3C1/T1BK_/A6
PA5/SCK/TX4_/O2N0/A5
PC19
PC18
PC17 PDP
PC16 PDM
VCC
0.1uF
C1
GND
PB1
PA7
PA6
PA5
CH32X035F7P6
RST
S1
C11
0.1uF
LED
3V3
1KR3
LED2
LED2
D3
3V3
1KR6
LED1
LED1
D4
PIN
P3
VBUS11
VBUS12
HEADER 2
P1
LED1
VBUS
VCC
PB12
PC15
PC1
PA1
PA3
GND
LED2
VBUS
VCC
PC14
PC3
PA0
PA2
PA4
GND
Header 9X2
P2
GND
GND
GND
PC17
PC16
PA7
PA5
GND
VCC
GND
PC18
PC19
PB1
PA6
GND
GND
Header 8X2
DOWNLOAD
VCC
R5
4.7K
S4
Download
PC17

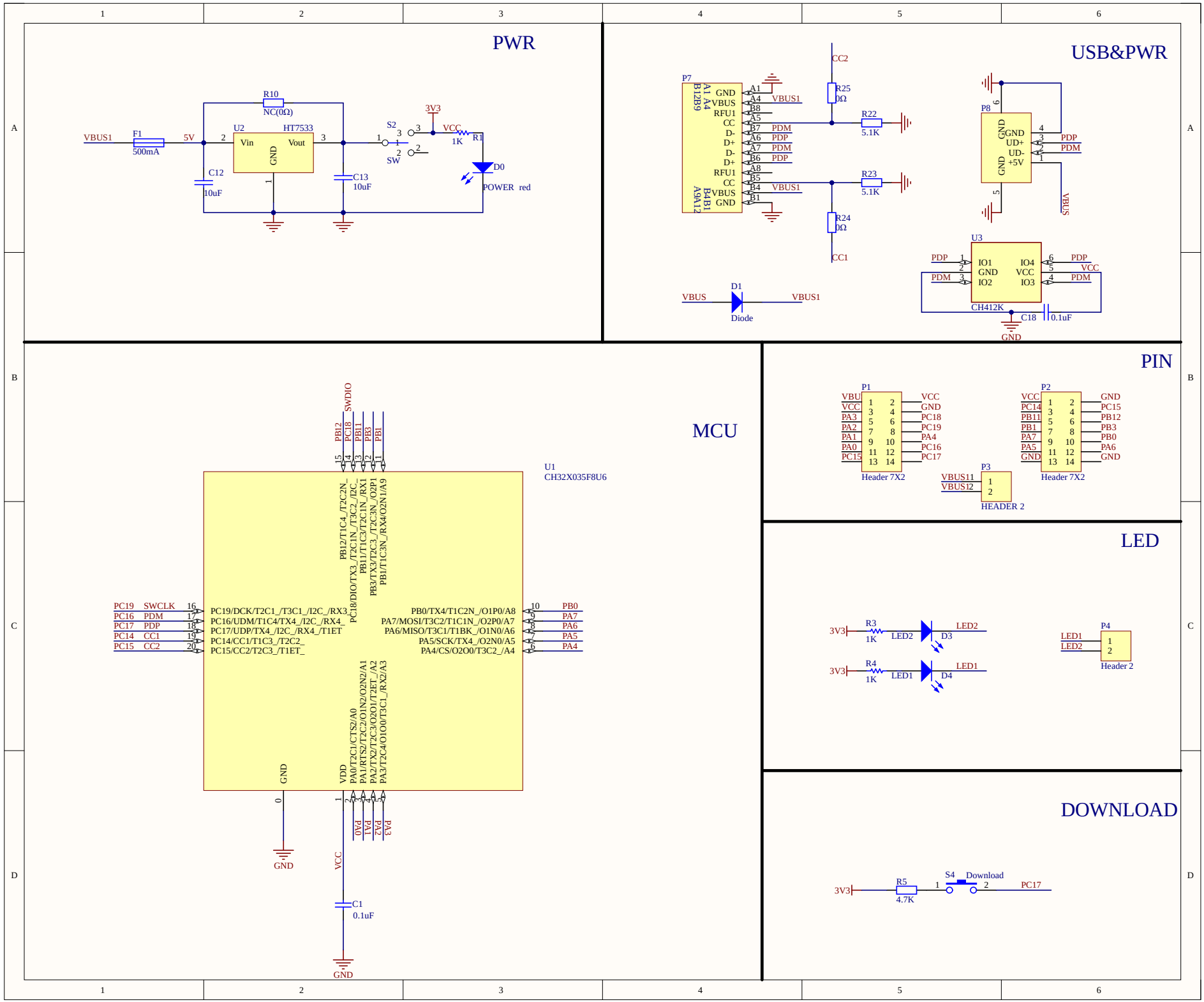
PWR
VBUS1
F1
500mA
5V
R10
NC(0Ω)
U2
HT7533
Vin
Vout
GND
C12
10uF
C13
10uF
S2
SW
3V3
VCC
R1
1K
D0
POWER red
USB&PWR
P7
GND
VBUS
RFU1
CC
D-
D+
D-
D+
RFU1
CC
VBUS
GND
A1 A4
B12B9
B4B1
A9A12
VBUS1
PDM
PDP
PDM
PDP
VBUS1
CC2
R25
0Ω
R22
5.1K
R23
5.1K
R24
0Ω
CC1
P8
GND
UD+
UD-
+5V
PDP
PDM
VBUS
U3
IO1
GND
IO2
IO4
VCC
IO3
CH412K
C18
0.1uF
GND
VBUS
D1
Diode
VBUS1
MCU
U1
CH32X035F8U6
PB12
PC18
PB11
PB3
PB1
SWDIO
PB12/T1C4_/T2C2N_
PC18/DIO/TX3_/T2C1N_/T3C2_/I2C_
PB11/T1C3/T2C1N_/RX1
PB3/TX3/T2C3_/T2C3N_/O2P1
PB1/T1C3N_/RX4/O2N1/A9
PC19 SWCLK
PC16 PDM
PC17 PDP
PC14 CC1
PC15 CC2
PC19/DCK/T2C1_/T3C1_/I2C_/RX3_
PC16/UDM/T1C4/TX4_/I2C_/RX4_
PC17/UDP/TX4_/I2C_/RX4_/T1ET
PC14/CC1/T1C3_/T2C2_
PC15/CC2/T2C3_/T1ET_
PB0/TX4/T1C2N_/O1P0/A8
PA7/MOSI/T3C2/T1C1N_/O2P0/A7
PA6/MISO/T3C1/T1BK_/O1N0/A6
PA5/SCK/TX4_/O2N0/A5
PA4/CS/O2O0/T3C2_/A4
PB0
PA7
PA6
PA5
PA4
GND
VDD
PA0/T2C1/CTS2/A0
PA1/RTS2/T2C2/O1N2/O2N2/A1
PA2/TX2/T2C3/O2O1/T2ET_/A2
PA3/T2C4/O1O0/T3C1_/RX2/A3
PA0
PA1
PA2
PA3
GND
VCC
C1
0.1uF
GND
PIN
P1
VBU
VCC
PA3
PA2
PA1
PA0
PC15
VCC
GND
PC18
PC19
PA4
PC16
PC17
Header 7X2
P2
VCC
PC14
PB11
PB1
PA7
PA5
GND
GND
PC15
PB12
PB3
PB0
PA6
GND
Header 7X2
P3
VBUS11
VBUS12
HEADER 2
LED
3V3
R3
1K
LED2
LED2
D3
3V3
R4
1K
LED1
LED1
D4
P4
LED1
LED2
Header 2
DOWNLOAD
3V3
R5
4.7K
S4
Download
PC17

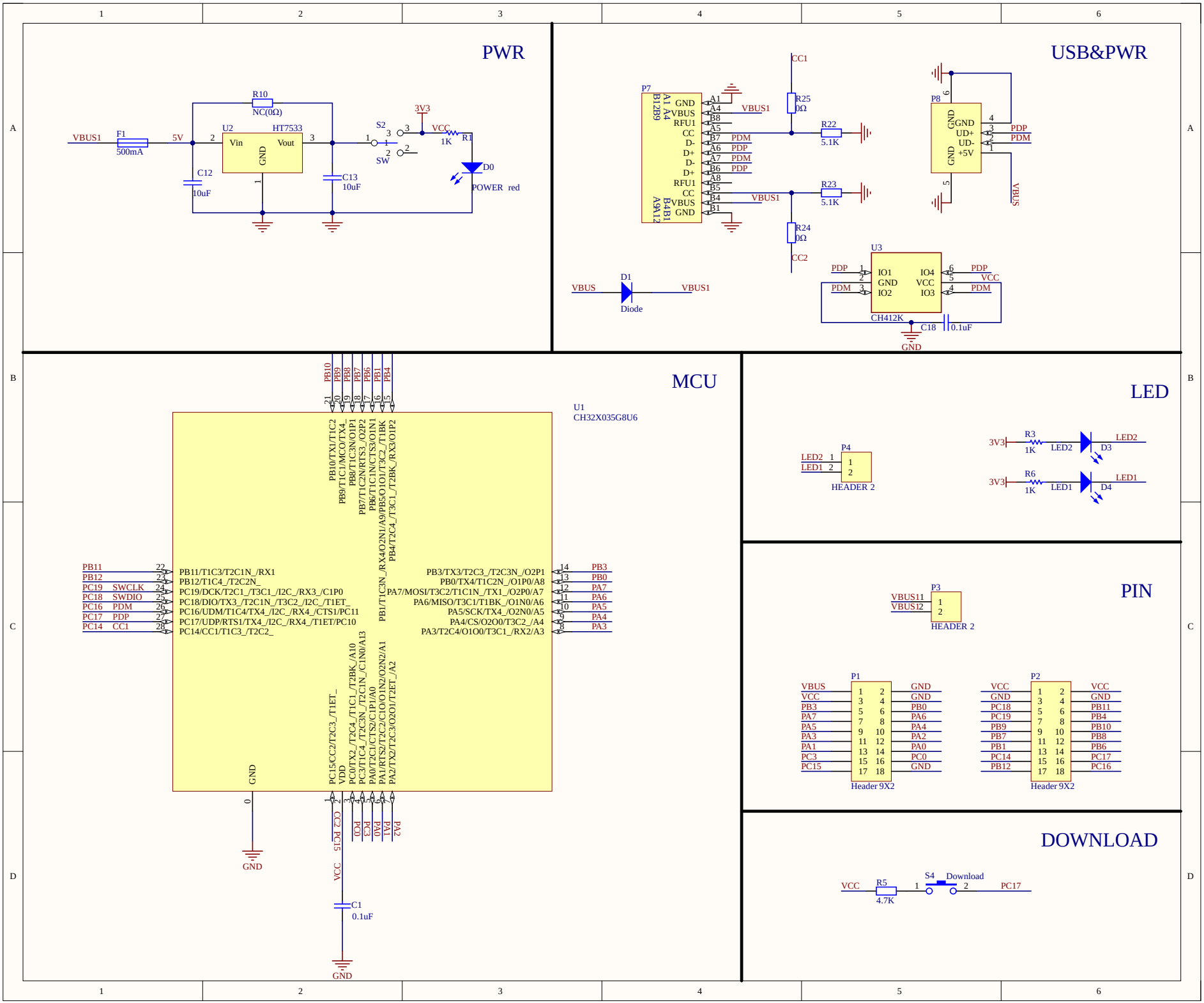
PWR
VBUS1
F1
500mA
5V
R10
NC(0Ω)
U2
HT7533
Vin
Vout
GND
C12
10uF
C13
10uF
3V3
S2
SW
VCC
1K
R1
D0
POWER red
USB&PWR
P7
GND
VBUS
RFU1
CC
D-
D+
D-
D+
RFU1
CC
VBUS
GND
PDM
PDP
PDM
PDP
VBUS1
VBUS1
CC1
R25
0Ω
R22
5.1K
R23
5.1K
R24
0Ω
CC2
P8
GND
UD+
UD-
+5V
PDP
PDM
VBUS
U3
IO1
GND
IO2
IO4
VCC
IO3
PDP
PDM
PDP
VCC
PDM
CH412K
C18
0.1uF
GND
VBUS
D1
Diode
VBUS1
MCU
U1
CH32X035G8U6
PB10
PB9
PB8
PB7
PB6
PB1
PB4
PB11
PB12
PC19 SWCLK
PC18 SWDIO
PC16 PDM
PC17 PDP
PC14 CC1
PB3
PB0
PA7
PA6
PA5
PA4
PA3
GND
PC15
CC2
VDD
PC0
PC3
PA0
PA1
PA2
VCC
C1
0.1uF
GND
LED
P4
LED2
LED1
HEADER 2
3V3
R3
1K
LED2
D3
3V3
R6
1K
LED1
D4
PIN
P3
VBUS11
VBUS12
HEADER 2
P1
VBUS
VCC
PB3
PA7
PA5
PA3
PA1
PC3
PC15
GND
VCC
PB0
PA6
PA4
PA2
PA0
PC0
GND
Header 9X2
P2
VCC
GND
PC18
PC19
PB9
PB7
PB1
PC14
PB12
VCC
GND
PB11
PB4
PB10
PB8
PB6
PC17
PC16
Header 9X2
DOWNLOAD
VCC
R5
4.7K
S4
Download
PC17