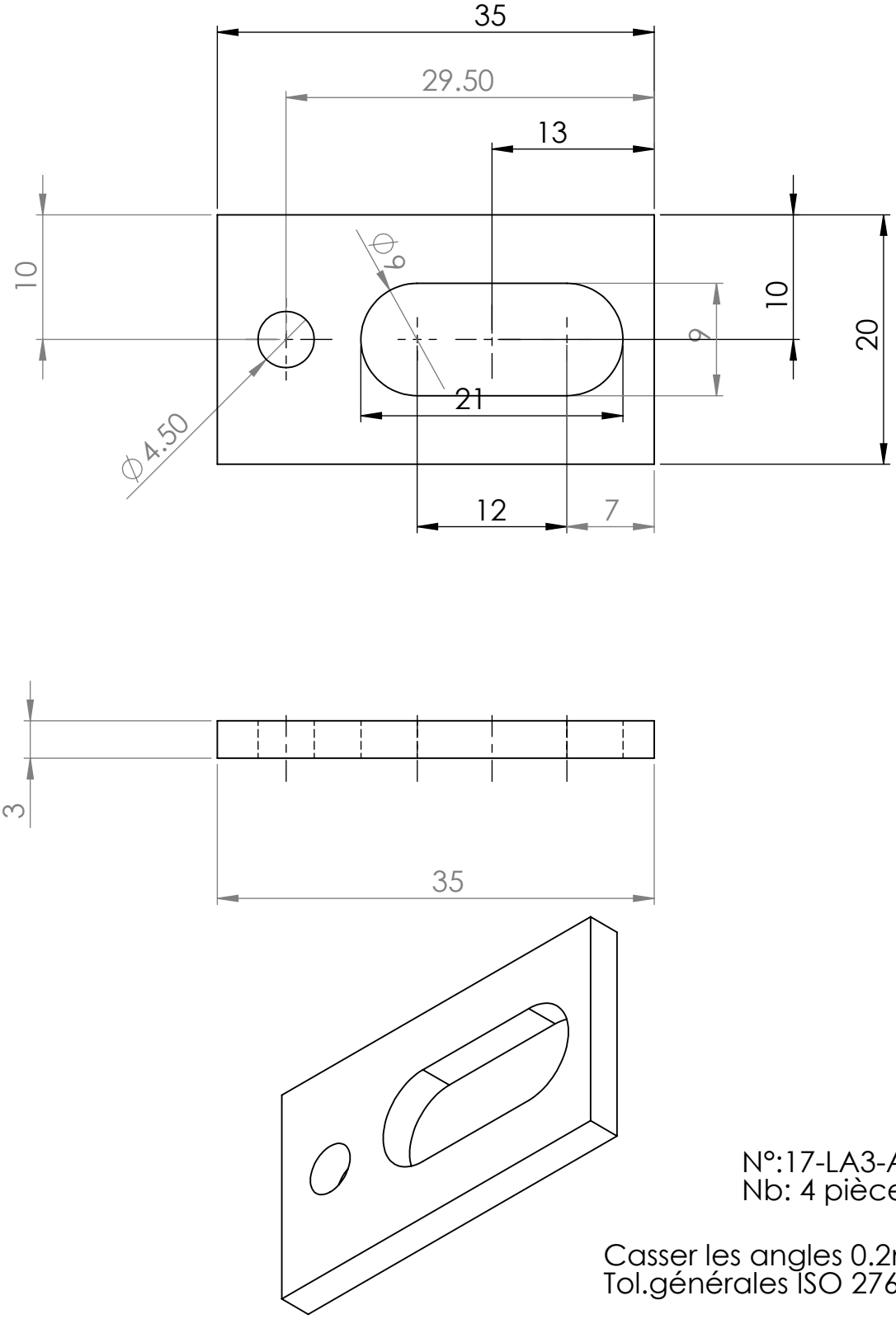

N°:17-LA3-AM-010
Nb: 4 pièces

Casser les angles 0.2mm
Tol.générales ISO 2768-mk

UNLESS OTHERWISE SPECIFIED: DIMENSIONS ARE IN MILLIMETERS SURFACE FINISH: TOLERANCES: LINEAR: ANGULAR:	FINISH:	DEBURR AND BREAK SHARP EDGES	DO NOT SCALE DRAWING	REVISION	

	NAME	SIGNATURE	DATE
DRAWN	Maghrabi Alaa		10/8/2017
CHK'D			
APPV'D			
MFG			
Q.A			

TITLE:

MATERIAL: Aluminium

DWG NO. converter_holder

A4

WEIGHT:

SCALE:2:1

SHEET 1 OF 1