Ministry Of Higher Education

Higher Technological Institute

Mechatronics Engineering Department

Design of Smart Machines

Proposal about : Autonomous Machine for Paper checking process

Supervised by:

Dr. Osama Ismail

Eng. Ehab fydallah

Eng. Hossam Eldin

Submitted by:

Woroud Ahmed Shaker 20120695

Alaa Zaki Elfiqi 20120855

Amira Hamdi Ahmed 20111318

17 December 2016

Contents

1. Abstract: 4
1.1 Objective: 4
1.2 Method: 4
1.3 Result: 4
2. Overview:.....5
2.1 Mechanical: 5
2.2 Electrical: 11
2.3 Controlling: 11
2.4 wiring: 11
3. Programming code: 12
3.1 Labview code: 12
3.2 arduino code: 14
4. Data Sheets: 15
4.1 servo motor 15
4.2 Camera : 16
5. Time plan: 17

Figure1 servo 5
Figure 2 servo base 6
Figure 3 radial ball bearing.....6
Figure4 billow block 7
Figure5 DC motor 7
Figure 6 rod 8
Figure7 coupling 8
Figure8 base.....9
Figure 9 axis 9
Figure 10 bearing assembly. 10
Figure 11 assembly 10
Figure 12 H-Bridge circuit 11
Figure13 H-Bridge layout 11
Figure 14 part A Labview code.....12
Figure 15 B Labview code 12
Figure 16 C Labview code 13
Figure17 D Labview code 13

1. Abstract:

1.1 Objective:

Design and built a system with its checking system to make different shapes from paper using process with lowest number of workers needed with high quality and easy to use.

Our device is may be used in small shops that does not need high quantity to produce different kind of shaped paper.

Our device can further modified to afford shaping of metals but we found that shaping of metals needs heat treatment so we turned our device for paper manufacturing.

1.2 Method:

After cutting the shaped paper will dropped through holes then goes to a conveyer, which makes the shapes goes to a checking system to decide which pass to go to its suitable box. A new shift of paper occurs makes the rest remained paper to be doped into a box.

Controlling done through PC and Arduino for controlling and interfacing.

1.3 Result:

so far, producing shaped paper with lowest number of workers needed with high quality, which can used to produce sticky notes, sticker, adhesive notes... Etc.

2. Overview:

2.1 Mechanical:

The mechanical system consists of:

1) DC motor.
2) Conveyor.
3) Camera.
4) Servomotor.
5) Paper box.

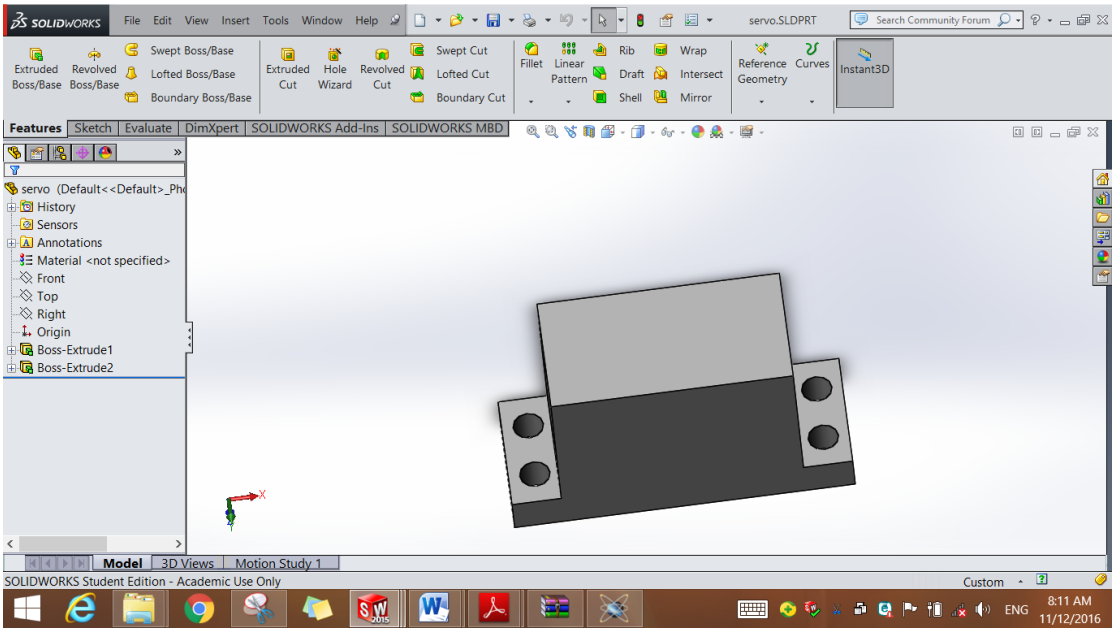

Figure1 servo

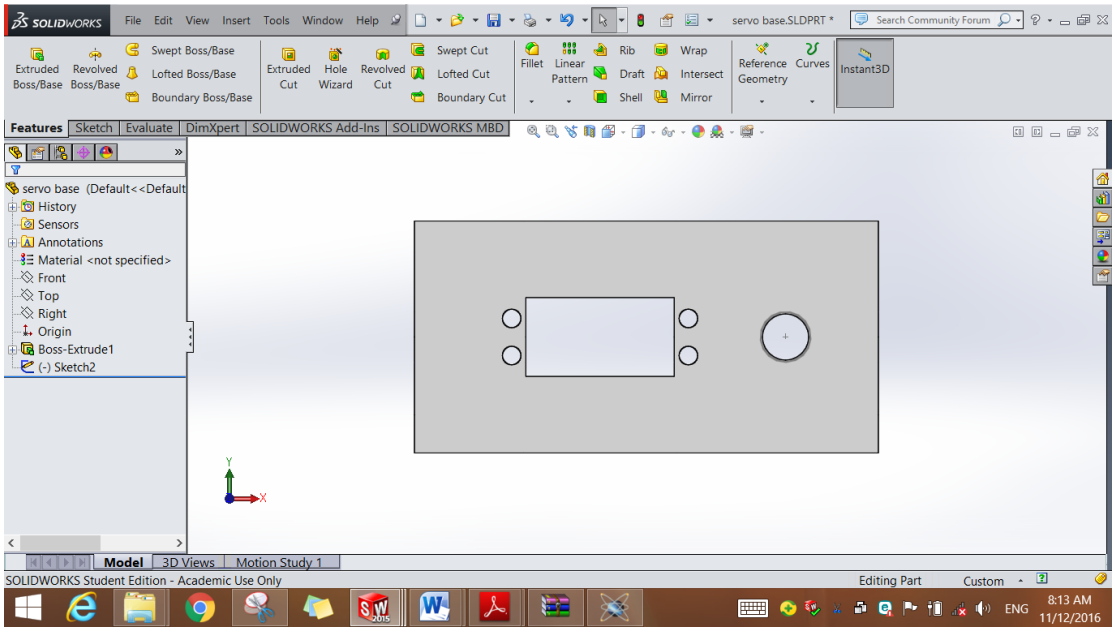

Figure 2 servo base

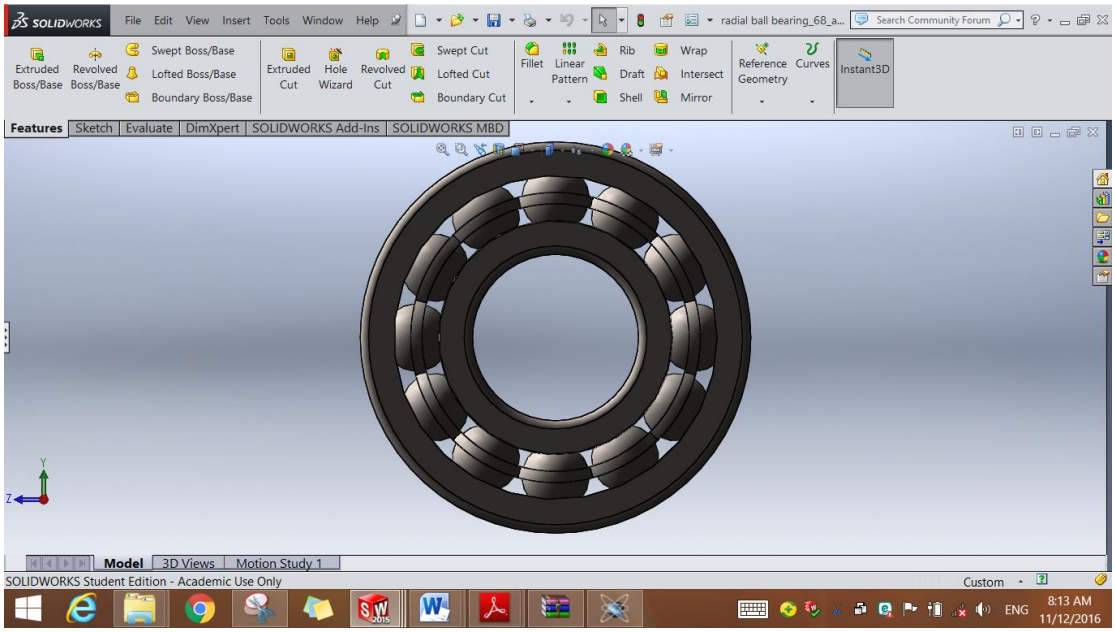

Figure 3 radial ball bearing

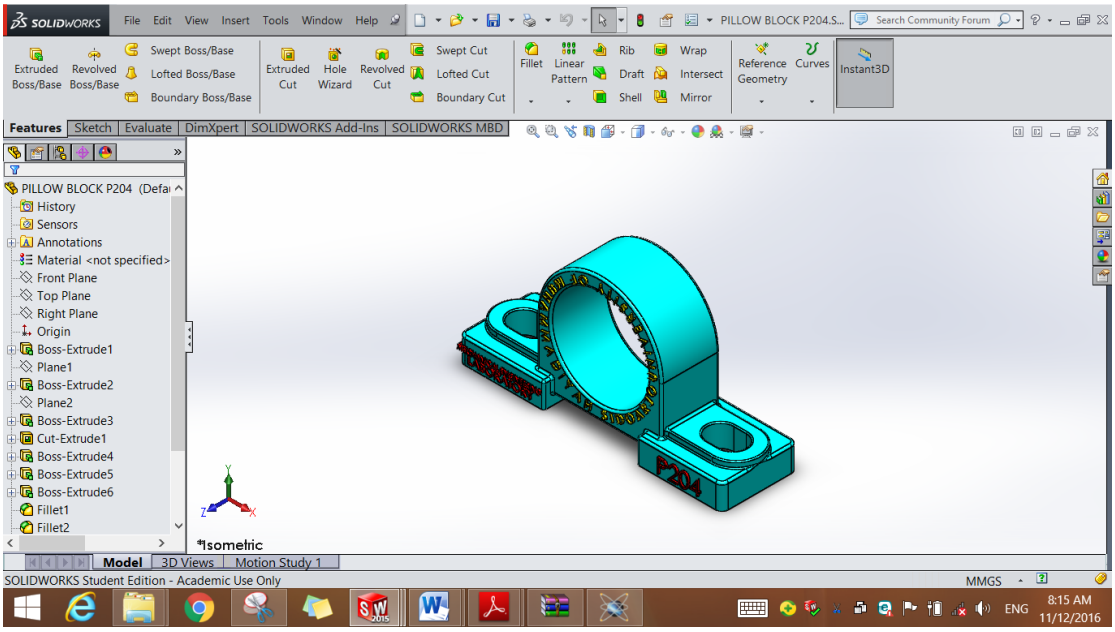

Figure4 billow block

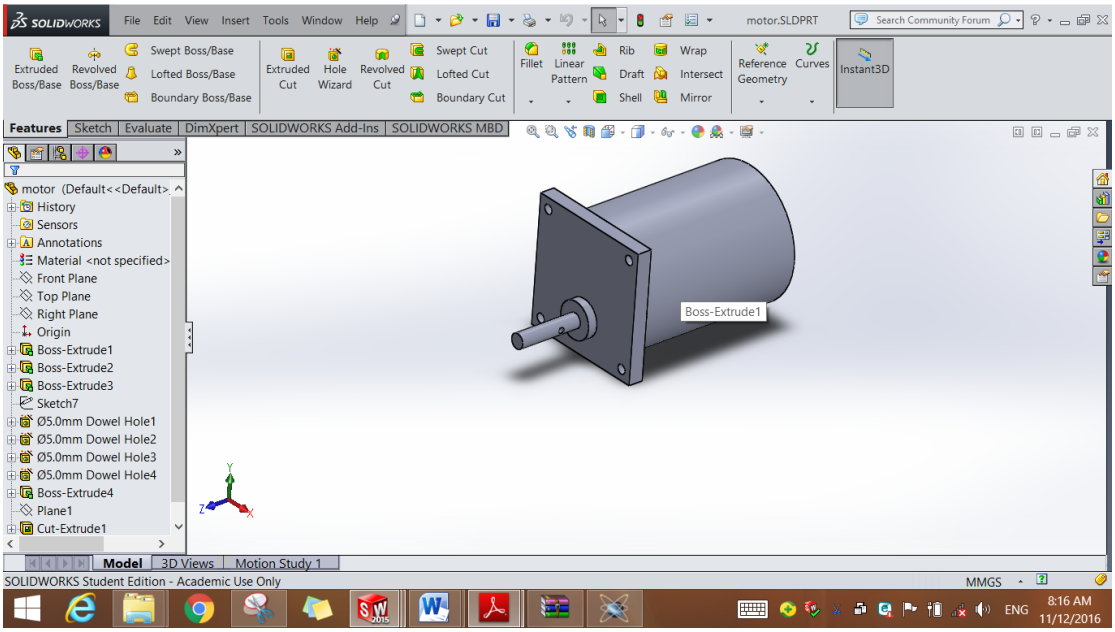

Figure5 DC motor

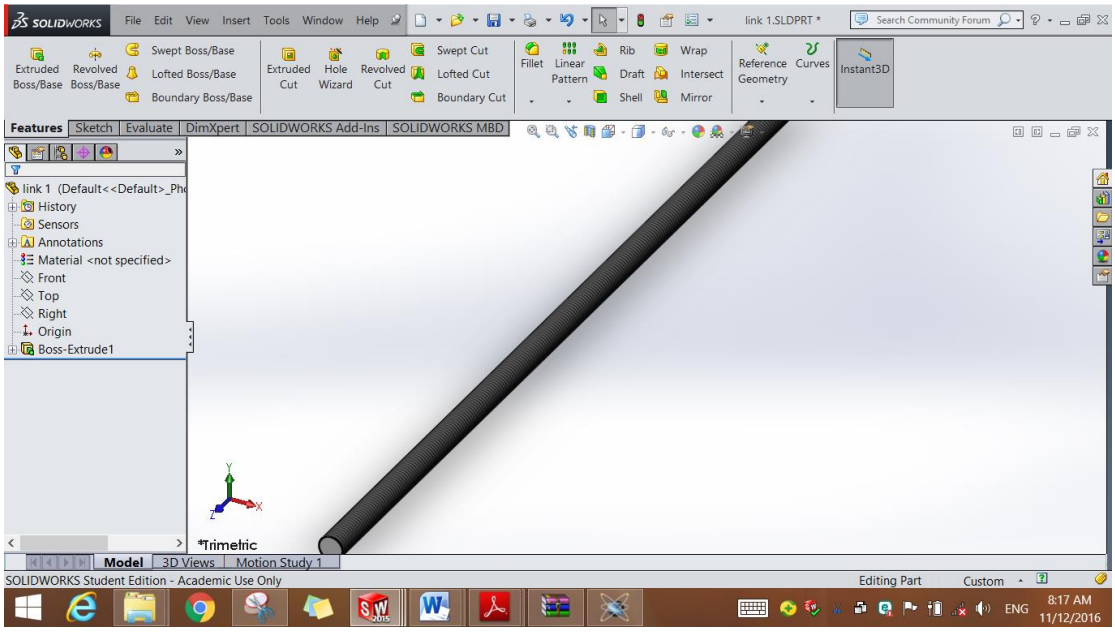

Figure 6 rod

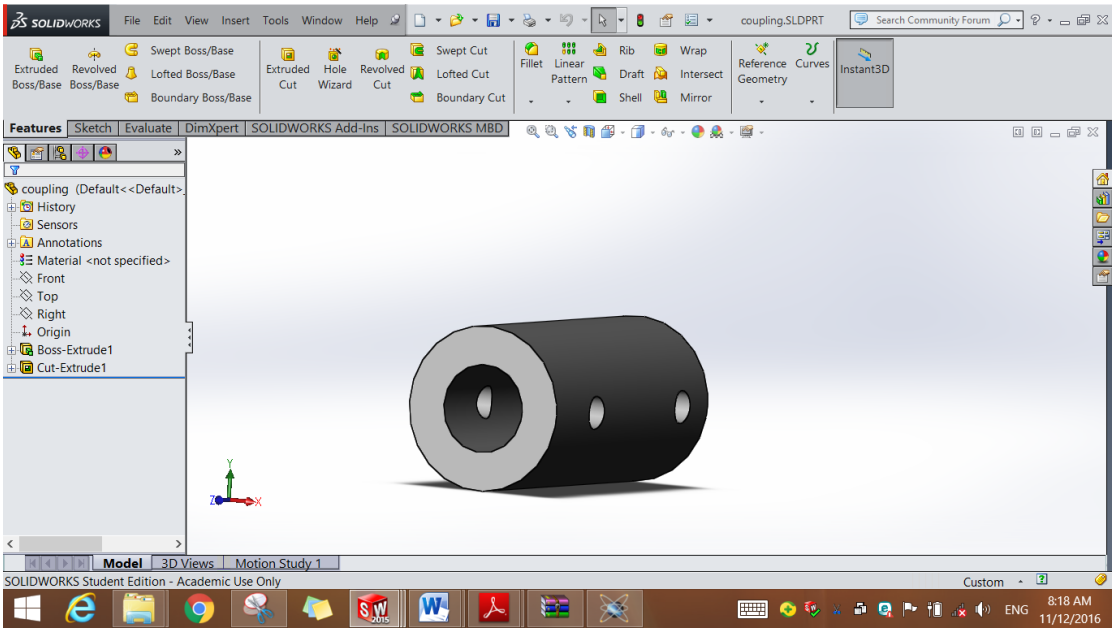

Figure7 coupling

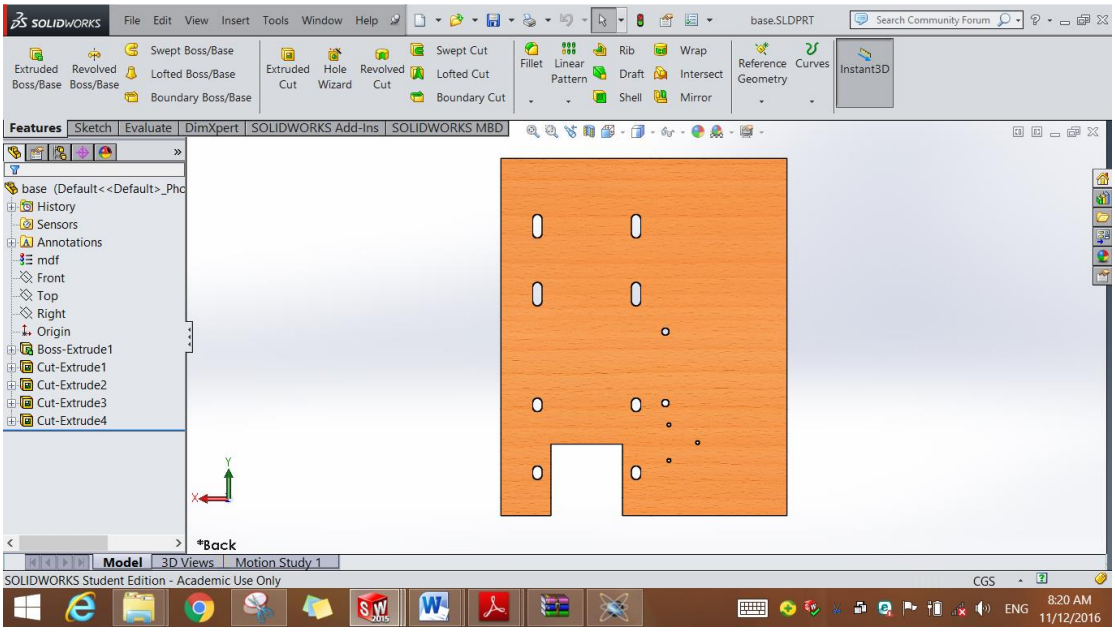

Figure8 base

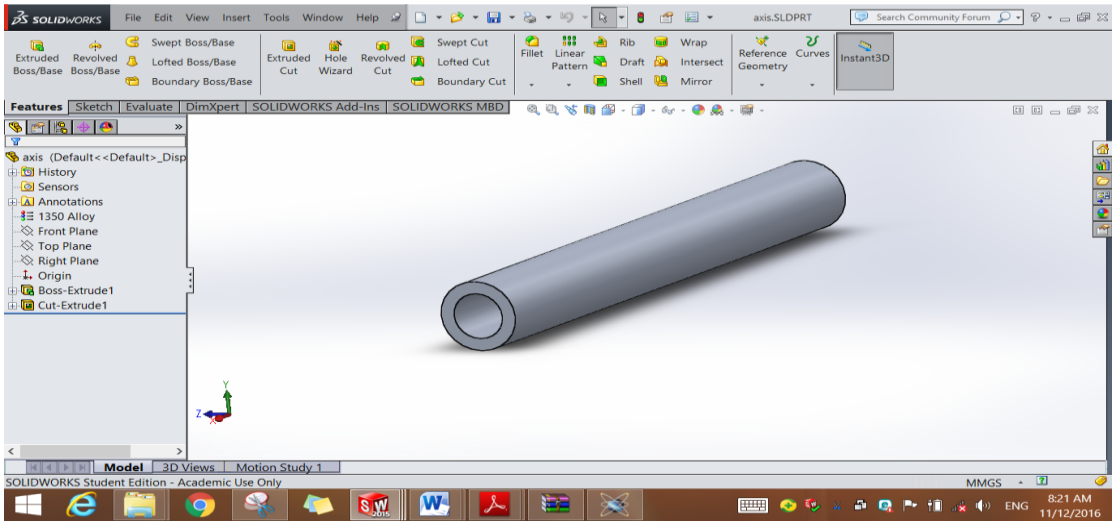

Figure 9 axis

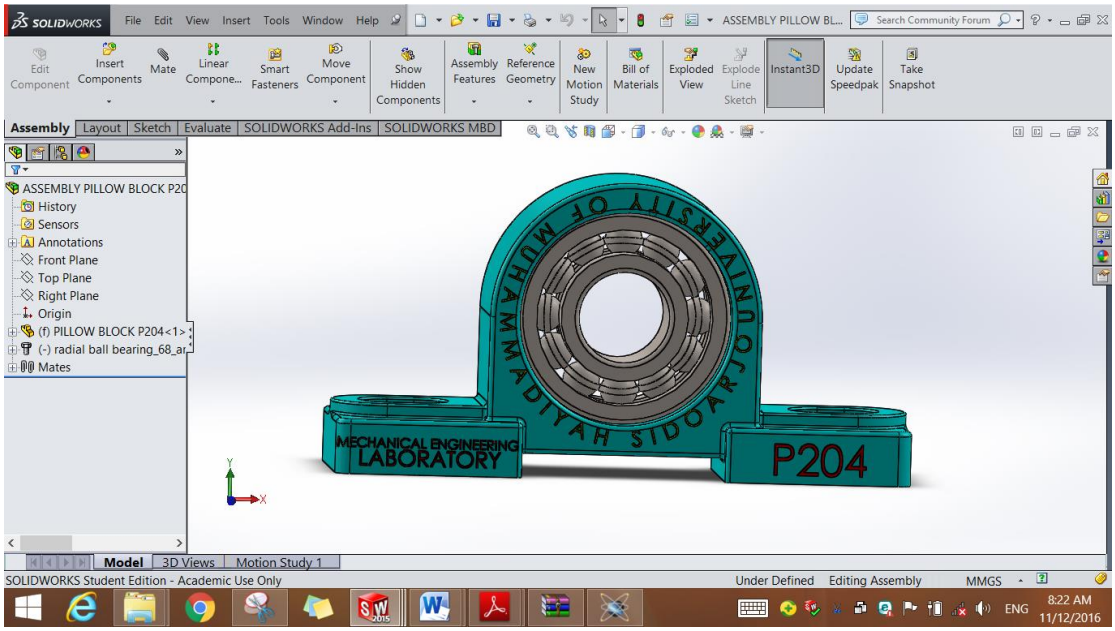

Figure 10 bearing assembly.

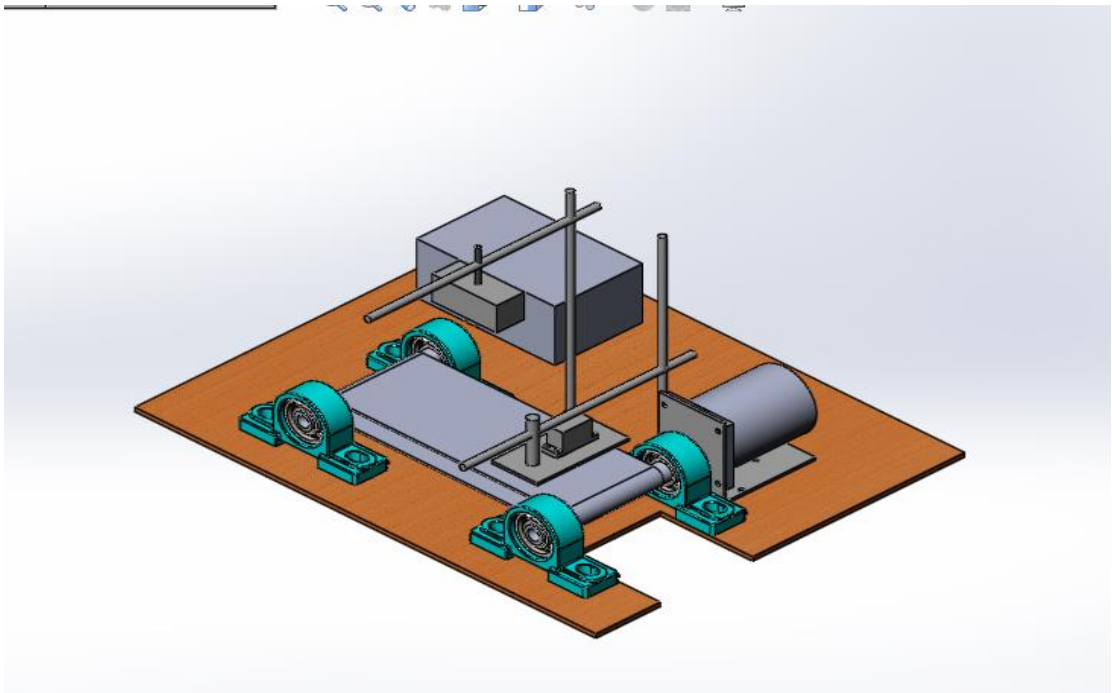

Figure 11 assembly

2.2 Electrical:

Using a DC power supply, which is suitable to the arduino, DC motor, servo motor and camera.

2.3 Controlling:

Controlling system is done using PC and Arduino, the programming is done according to the flow chart shown in the next page.

2.4 wiring:

1) Camera: is supplied from pc.
2) Servo: is supplied from the arduino.
3) DC motor: has a controller circuit to control his start and stop

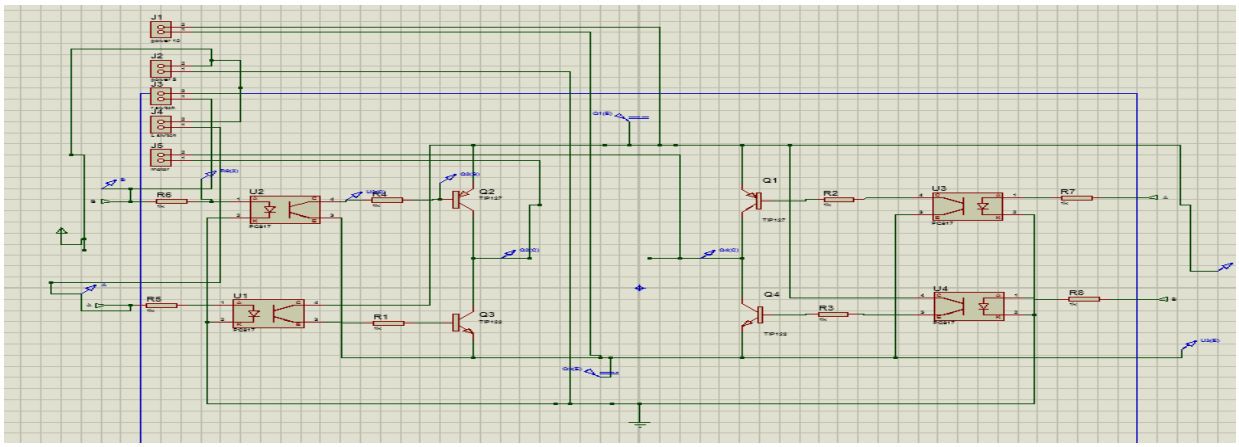

Figure 12 H-Bridge circuit

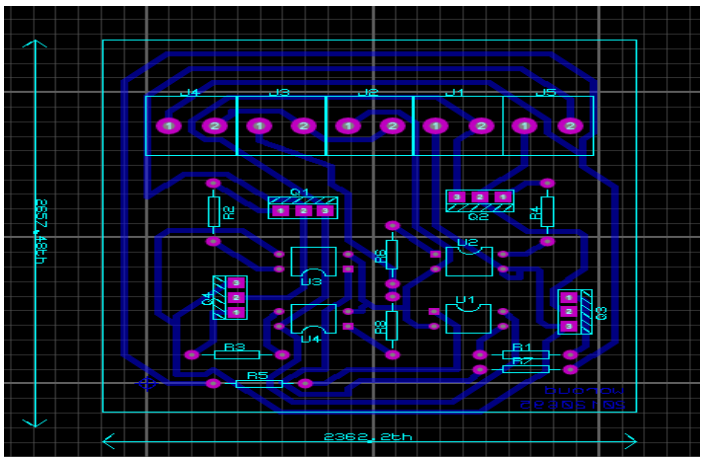

Figure13 H-Bridge layout

3. Programming code:

3.1 Labview code:

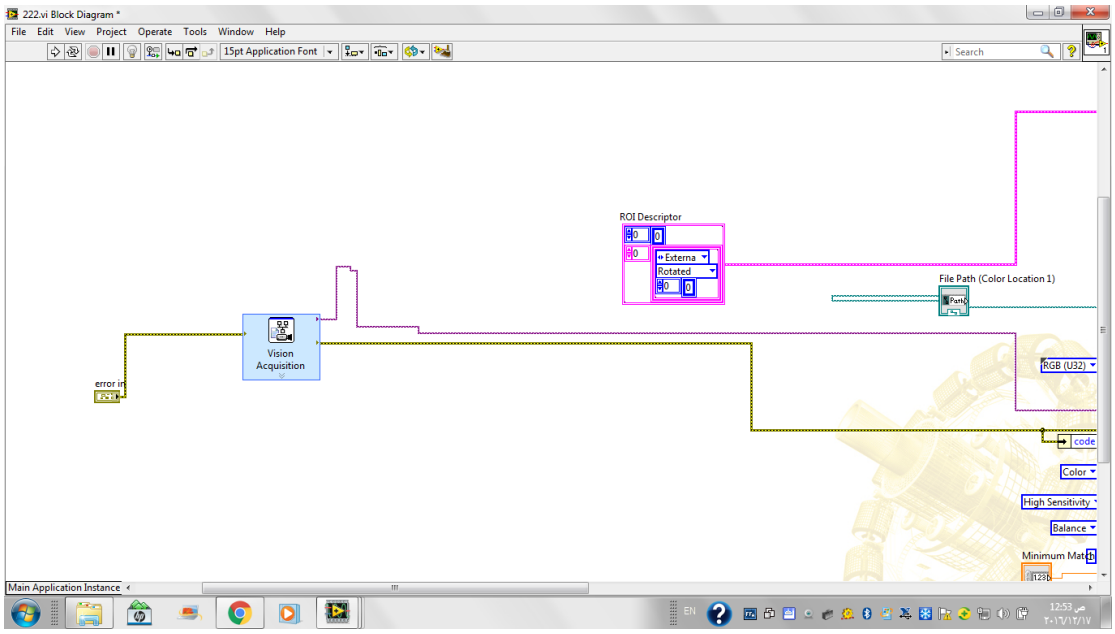

Figure 14 part A Labview code

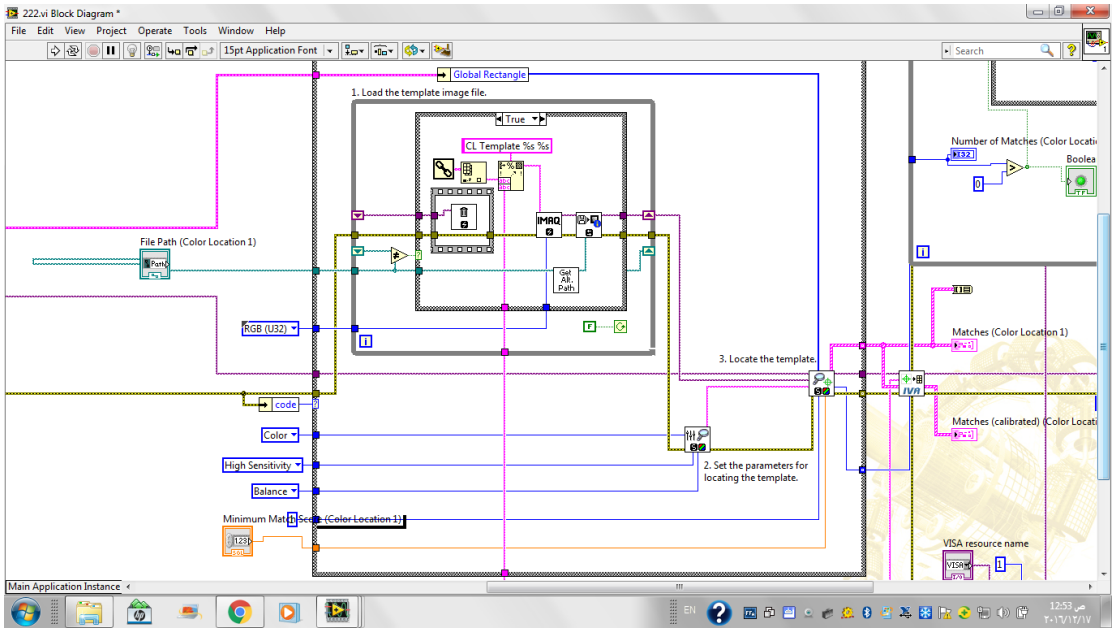

Figure 15 B Labview code

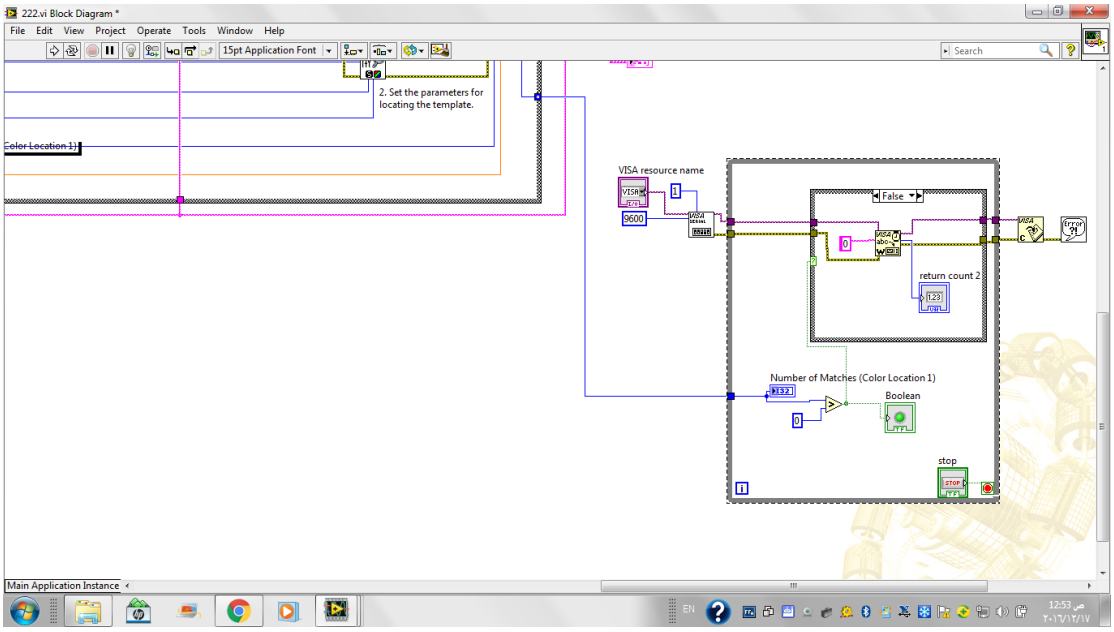

Figure 16 C Labview code

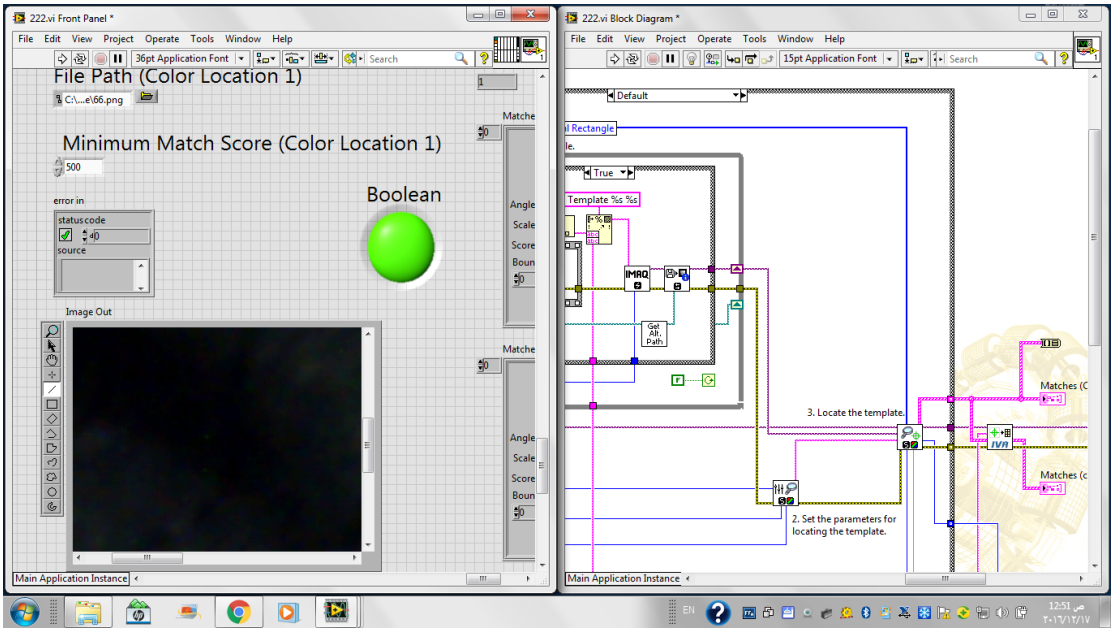

Figure17 D Labview code

3.2 arduino code:

```
#include <Servo.h>

Servo myservo;  // create servo object to control a servo
// twelve servo objects can be created on most boards

int pos = 0;    // variable to store the servo position

void setup() {
  myservo.attach(9);  // attaches the servo on pin 9 to the servo object
}

void loop() {
  for (pos = 0; pos <= 180; pos += 1) { // goes from 0 degrees to 180 degrees
    // in steps of 1 degree
    myservo.write(pos);              // tell servo to go to position in variable 'pos'
    delay(15);                       // waits 15ms for the servo to reach the position
  }
  for (pos = 180; pos >= 0; pos -= 1) { // goes from 180 degrees to 0 degrees
    myservo.write(pos);              // tell servo to go to position in variable 'pos'
    delay(15);                       // waits 15ms for the servo to reach the position
  }
}
```

4. Data Sheets:

4.1 servo motor

4.2 Camera :

HD 12.0 M pixels

Up and down 30 degree you can adjust the angle as you like.

Imported optical lens good precision and undistorted images.

Autofocus is not necessary to adjust the lens.

Designed for both laptop and desktop.

Compatible with USB2.0.

Support for Windows 2000
XP Win7 Win8 Vista 32bit.

works very well with MSN Yahoo and Skype etc

Specifications:

DSP chip: driver

Image Sensor: CMOS

Lens: good quality glass

HD: 12.0 M pixels

Dynamic resolution: 640 x 480

Frame rate: 30fps

Line Length: 140 cm

Package Weight: 122g 4.40 oz

Package list:1 x Webcam

5. Time plan:

	expected	real
Week 1	find the team and Idea, making proposal	**Done**
Week 2	Doing research and finding the best solutions	**Done**
Week 3	Doing calculations and simple tests to prove design concepts, begin deep drawing	**Done**
Week 4	Complete design parts, drawings, order material	**Done**
Week 5	build the prototype	**Done**
Week 6	Complete the prototype and start programming	**Done**
Week 7	Midterm	
Week 8	Midterm	
Week 9	Start electrical, continue programming	**Done**
Week 10	Continue electrical and programming	**Done**
Week 11	Test and modify device based on results. Order/buy parts and supplies needed for final construction.	**Done**
Week 12	Build final device.	**Done** (official vacation)
Week 13	Test and modify final device as necessary. Organize tools, materials, and supplies	
Week 14	**final**	