Robotronics Student Club

Higher Technological Institute

GRENDIZER TEAM

Real Steel Challenge 2015

By :

Aalaa Elfiqi 20120855

Sara Diaa 20120271

Bassant Ayman 20140316

Gihad Radwan 20143336

Doaa Gafaar 20140394

Mentor : Mohamed Elfiqi

Objective :

our object here is to make a robot with high torque that is strong ,unbeatable with a material with high strength and hardness and a fitting speed .

our main objective is the journey; doing what we love, the experience we get, the problems we face, think in different ways, new solutions, team working, and applying what we have learned to enhance our knowledge and through it in an open circle.

Acknowledgement

we thank God, our institute and everyone helped to apply what we have learned also Robotronics student club for such competition specially Eng : M. Elfiqi, Eng : M. Tarik , Eng ; M. Elsheewy, Eng : Ahmed Said, Eng : Ali Magdy.

Contents

Total Statement : 5

chapter 1 6

Mechanical 6

1.1 Design 6

- a rectangilar frame of alloy steel 40 cm*4o cm *1.25 mm all components inside ;batteries ,electronics and wheels concluded. 6

1.2 Base and components : 8

chapter 2 10

Electtical 10

2.1 Main Electrical Components 10

2.2 H-briges 11

chapter 3 14

Programming 14

3.1 control 14

Total Statement :

purchases	numers	price	Total price
motors	4+2	100-200	800
Italian wheels	6	15	90
couples	6	10	60
Lead battry 24 volt 7 mA	2	95	190
Joy stick	1	50	50
1 kg of alloy steel sheet	1 kg	25	Free
ardieno	1	110	No
Welding + mchining		10+30+50	90
Nail s	60	.20	25
Pcb boards	1	17	17
components		88+6+18	112
افيز +روزيتات - ترامل -سلوك			50
Total price			1484

chapter 1

Mechanical

1.1 Design

- a rectangilar frame of alloy steel 40 cm*4o cm *1.25 mm all components inside ;batteries ,electronics and wheels concluded.
- motors fixed to wheels with artelon couples.

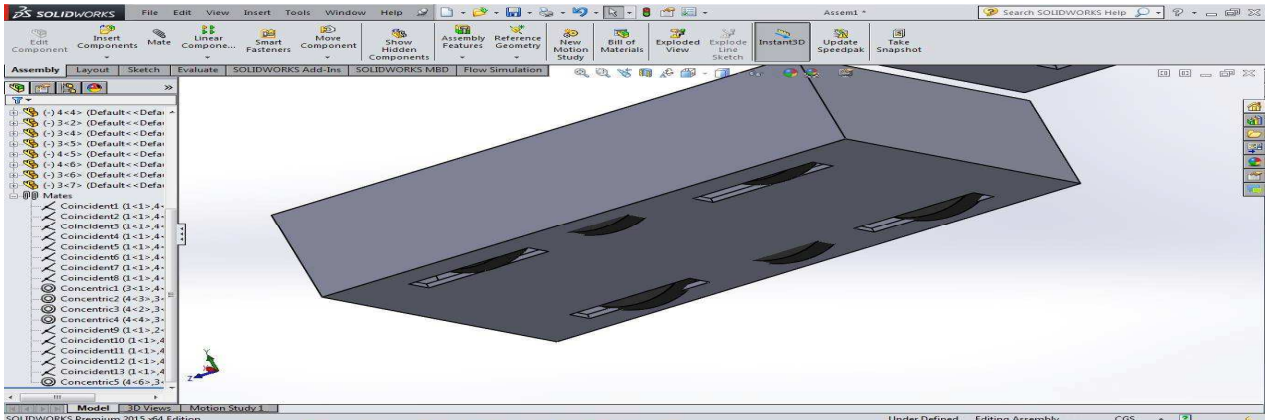

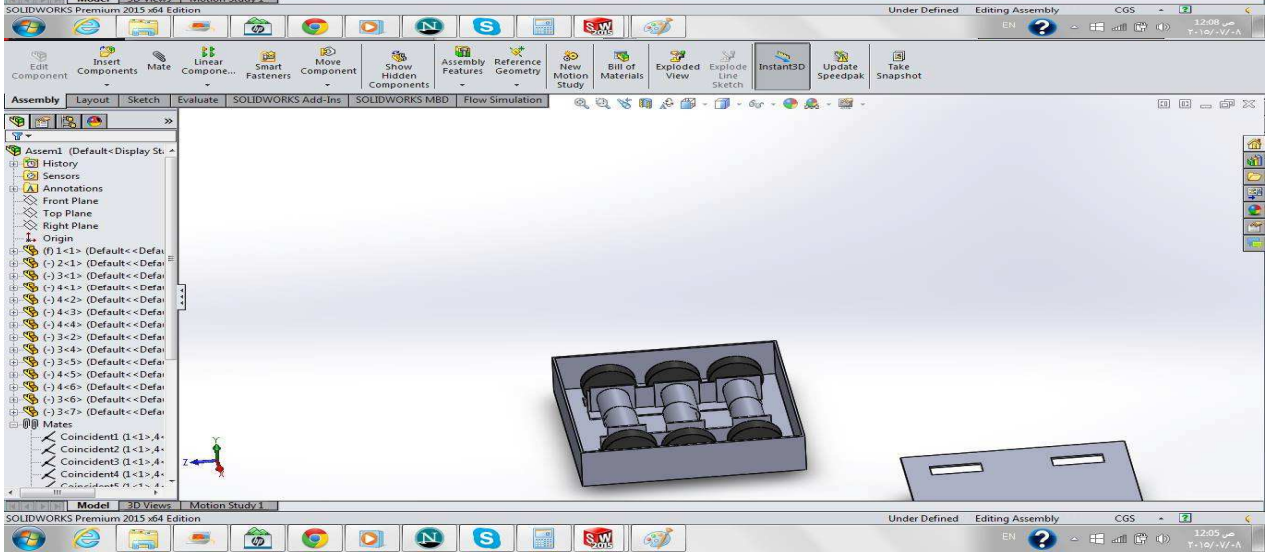

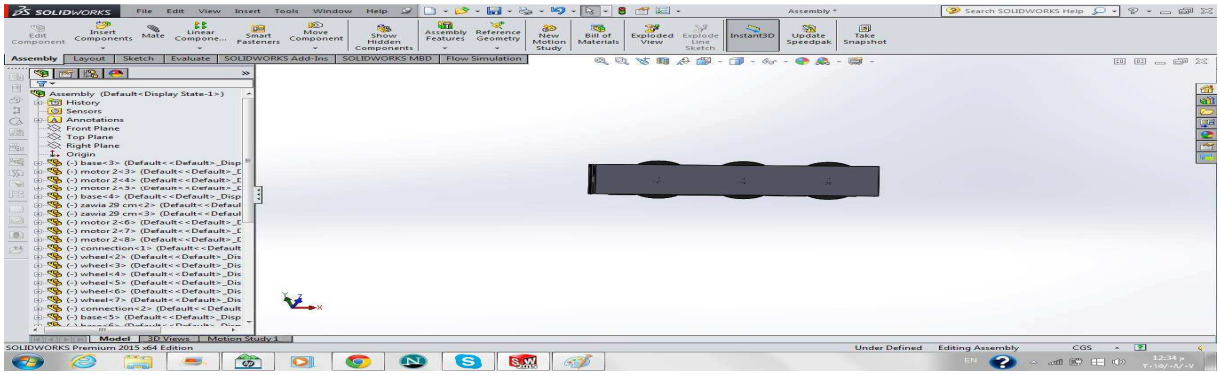
SOLIDWORKS
File Edit View Insert Tools Window Help
Assembly
Search SOLIDWORKS Help
Edit Component
Insert Components
Mate
Linear Compone...
Smart Fasteners
Move Component
Show Hidden Components
Assembly Features
Reference Geometry
New Motion Study
Bill of Materials
Exploded View
Explode Line Sketch
Instant3D
Update Speedpak
Take Snapshot
Assembly
Layout
Sketch
Evaluate
SOLIDWORKS Add-Ins
SOLIDWORKS MBD
Flow Simulation
Assembly (Default<Display State-1>)
History
Sensors
Annotations
Front Plane
Top Plane
Right Plane
Origin
Model
3D Views
Motion Study 1
SOLIDWORKS Premium 2015 x64 Edition
Under Defined
Editing Assembly
CGS

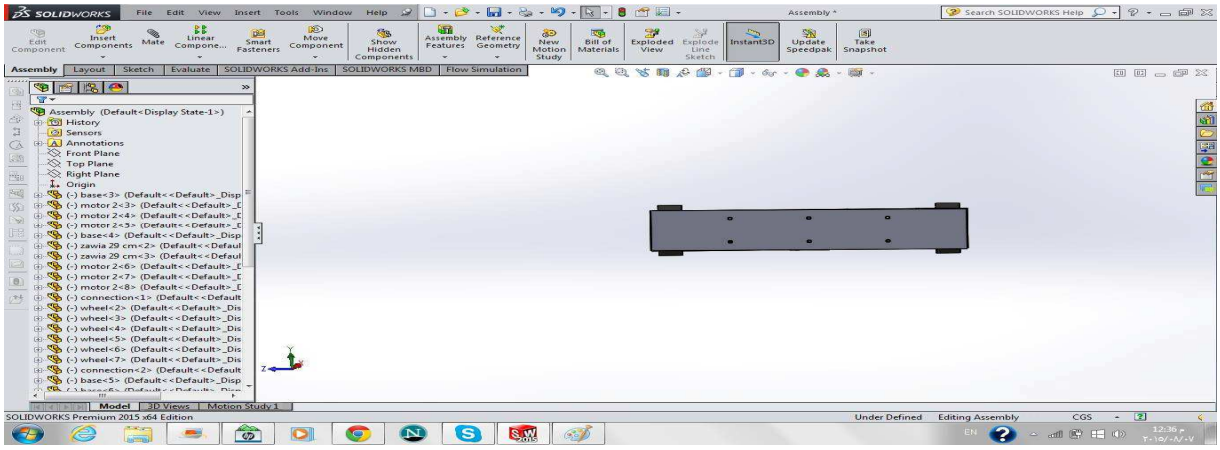
SOLIDWORKS
File Edit View Insert Tools Window Help
Assembly
Search SOLIDWORKS Help
Edit Component
Insert Components
Mate
Linear Compone...
Smart Fasteners
Move Component
Show Hidden Components
Assembly Features
Reference Geometry
New Motion Study
Bill of Materials
Exploded View
Explode Line Sketch
Instant3D
Update Speedpak
Take Snapshot
Assembly
Layout
Sketch
Evaluate
SOLIDWORKS Add-Ins
SOLIDWORKS MBD
Flow Simulation
Assembly (Default<Display State-1>)
History
Sensors
Annotations
Front Plane
Top Plane
Right Plane
Origin
Model
3D Views
Motion Study 1
SOLIDWORKS Premium 2015 x64 Edition
Under Defined
Editing Assembly
CGS

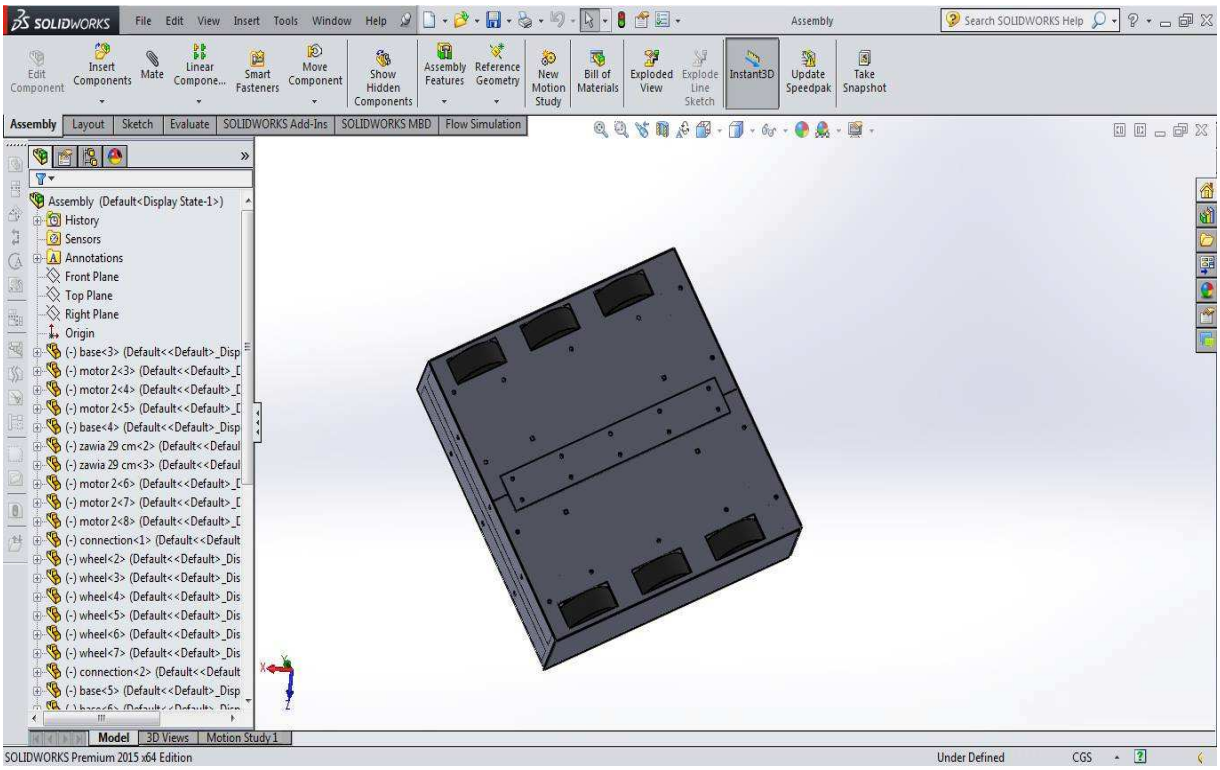
SOLIDWORKS
File Edit View Insert Tools Window Help
Assembly
Search SOLIDWORKS Help
Edit Component
Insert Components
Mate
Linear Compone...
Smart Fasteners
Move Component
Show Hidden Components
Assembly Features
Reference Geometry
New Motion Study
Bill of Materials
Exploded View
Explode Line Sketch
Instant3D
Update Speedpak
Take Snapshot
Assembly
Layout
Sketch
Evaluate
SOLIDWORKS Add-Ins
SOLIDWORKS MBD
Flow Simulation
Assembly (Default<Display State-1>)
History
Sensors
Annotations
Front Plane
Top Plane
Right Plane
Origin
(-) base<3> (Default<<Default>_Disp
(-) motor 2<3> (Default<<Default>_[
(-) motor 2<4> (Default<<Default>_[
(-) motor 2<5> (Default<<Default>_[
(-) base<4> (Default<<Default>_Disp
(-) zawia 29 cm<2> (Default<<Defaul
(-) zawia 29 cm<3> (Default<<Defaul
(-) motor 2<6> (Default<<Default>_[
(-) motor 2<7> (Default<<Default>_[
(-) motor 2<8> (Default<<Default>_[
(-) connection<1> (Default<<Default
(-) wheel<2> (Default<<Default>_Dis
(-) wheel<3> (Default<<Default>_Dis
(-) wheel<4> (Default<<Default>_Dis
(-) wheel<5> (Default<<Default>_Dis
(-) wheel<6> (Default<<Default>_Dis
(-) wheel<7> (Default<<Default>_Dis
(-) connection<2> (Default<<Default
(-) base<5> (Default<<Default>_Disp
Model
3D Views
Motion Study 1
SOLIDWORKS Premium 2015 x64 Edition
Under Defined
CGS

1.2 Base and components :

- 1 kg of steel alloy sheets with dimentions 400*40081.25 mm
- Aluminum stands to carry the motors
- 6 rubber wheels with 10 cm diameter
- 6 coupling
- 6 motors with 180 rpm and 8 kg.cm

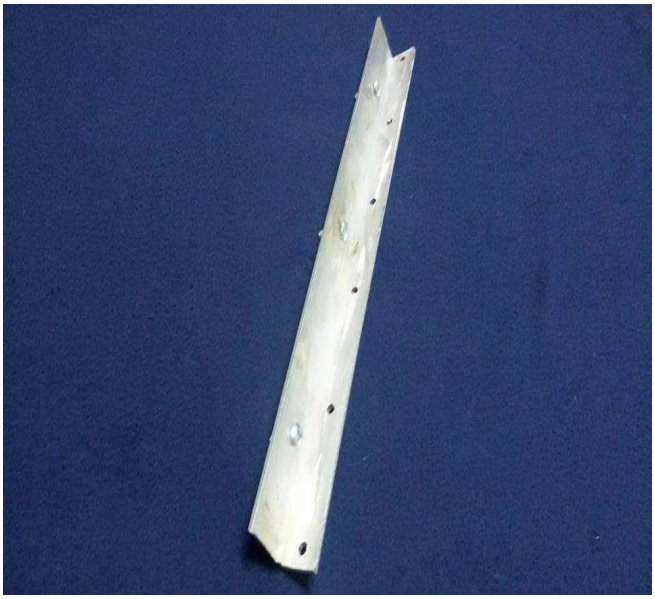

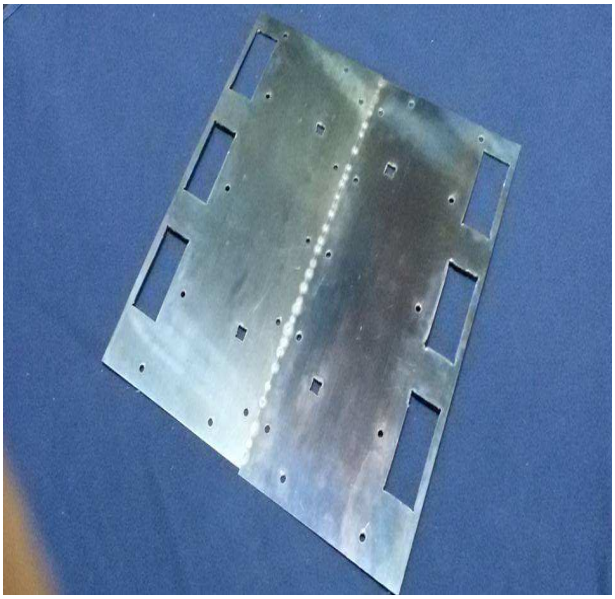

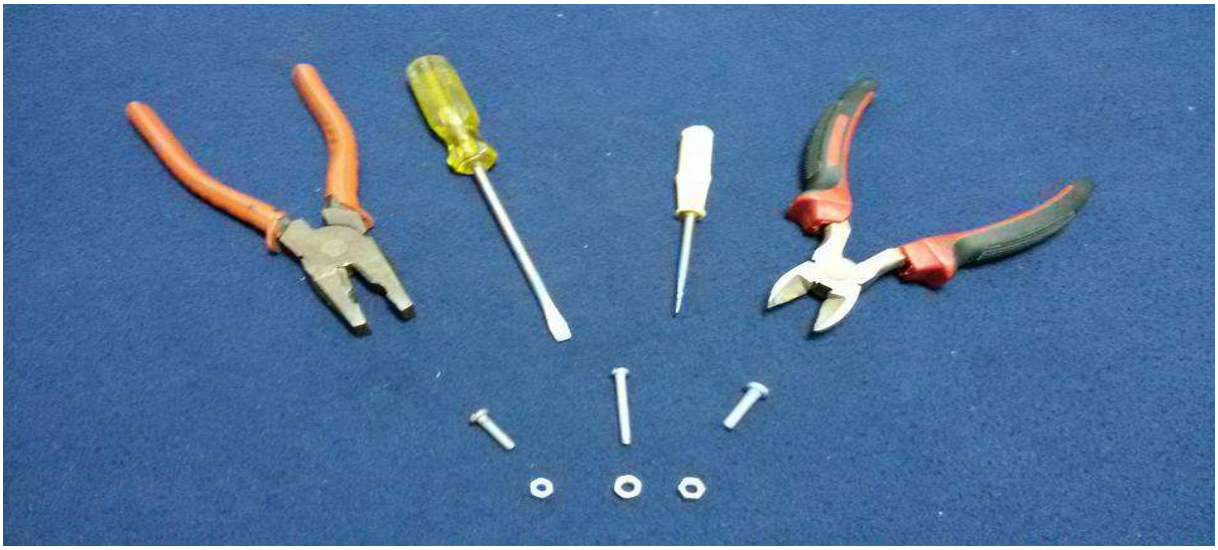

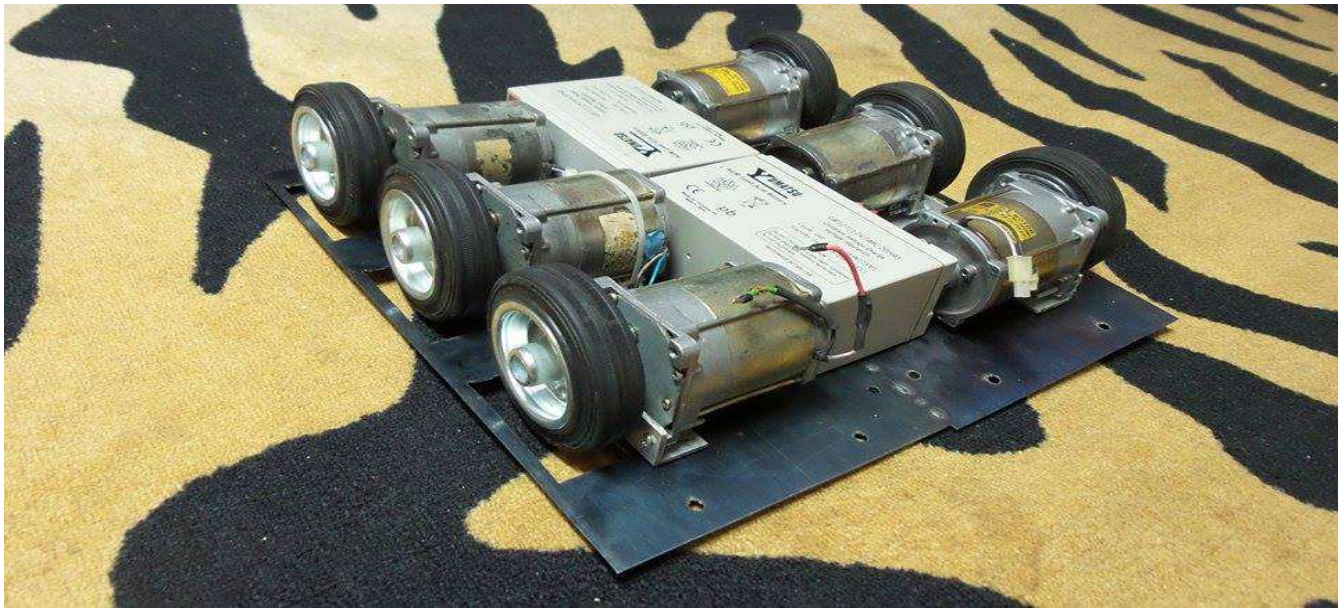

chapter 2

Electtical

2.1 Main Electrical Components

2 batteries with 24 volt , 7 mA

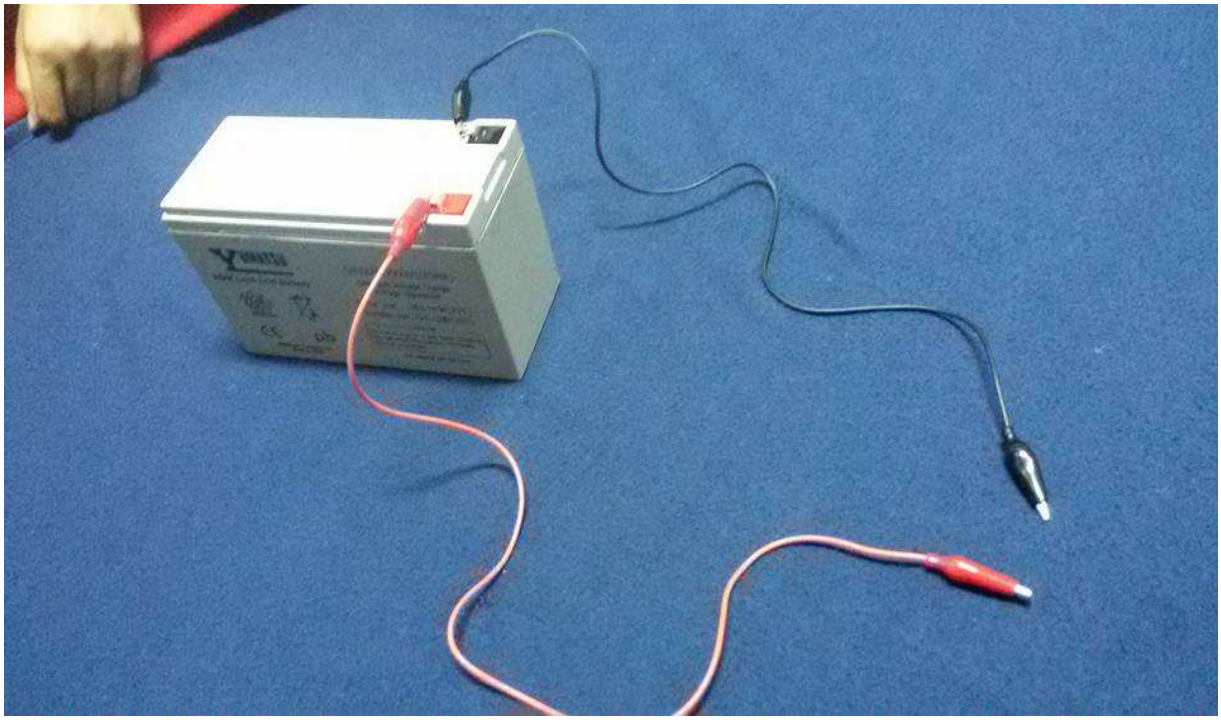

2.2 H-briges

6 H-Bridges to control the motors each 3 on a pcb board

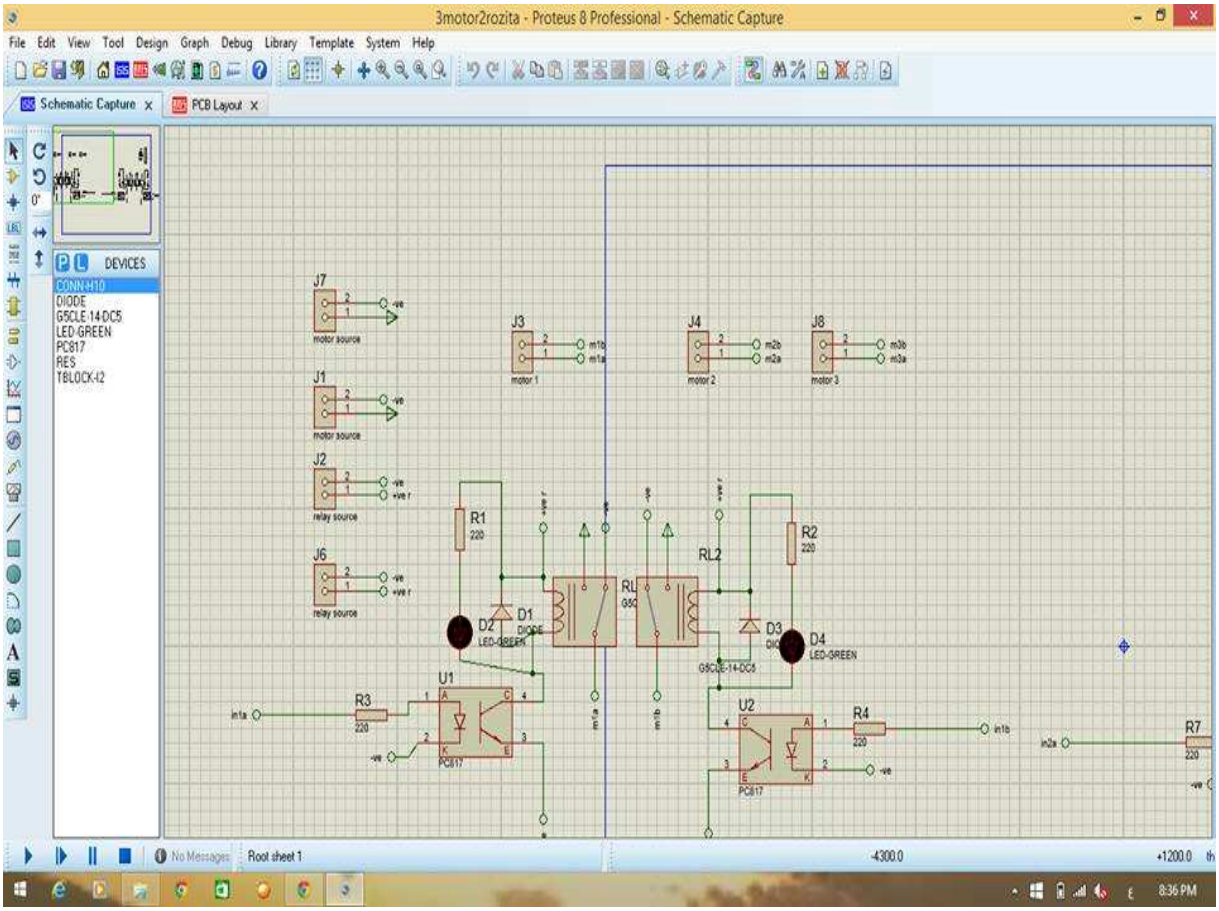

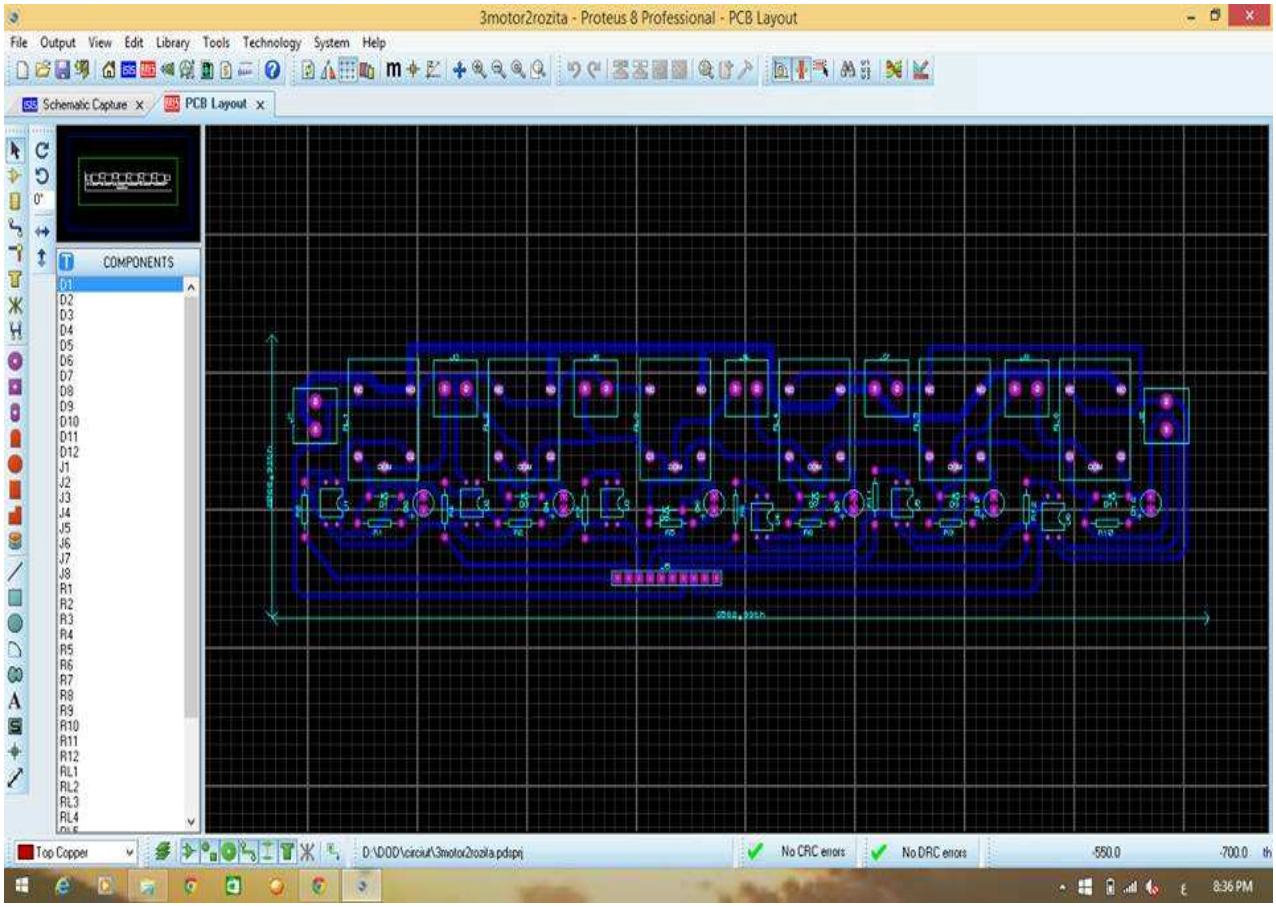
3motor2rozita - Proteus 8 Professional - PCB Layout
File Output View Edit Library Tools Technology System Help
Schematic Capture
PCB Layout
COMPONENTS
D1
D2
D3
D4
D5
D6
D7
D8
D9
D10
D11
D12
J1
J2
J3
J4
J5
J6
J7
J8
R1
R2
R3
R4
R5
R6
R7
R8
R9
R10
R11
R12
RL1
RL2
RL3
RL4
Top Copper
D:\DOD\circiut\3motor2rozita.pdsprj
No CRC errors
No DRC errors
-550.0
-700.0
8:36 PM

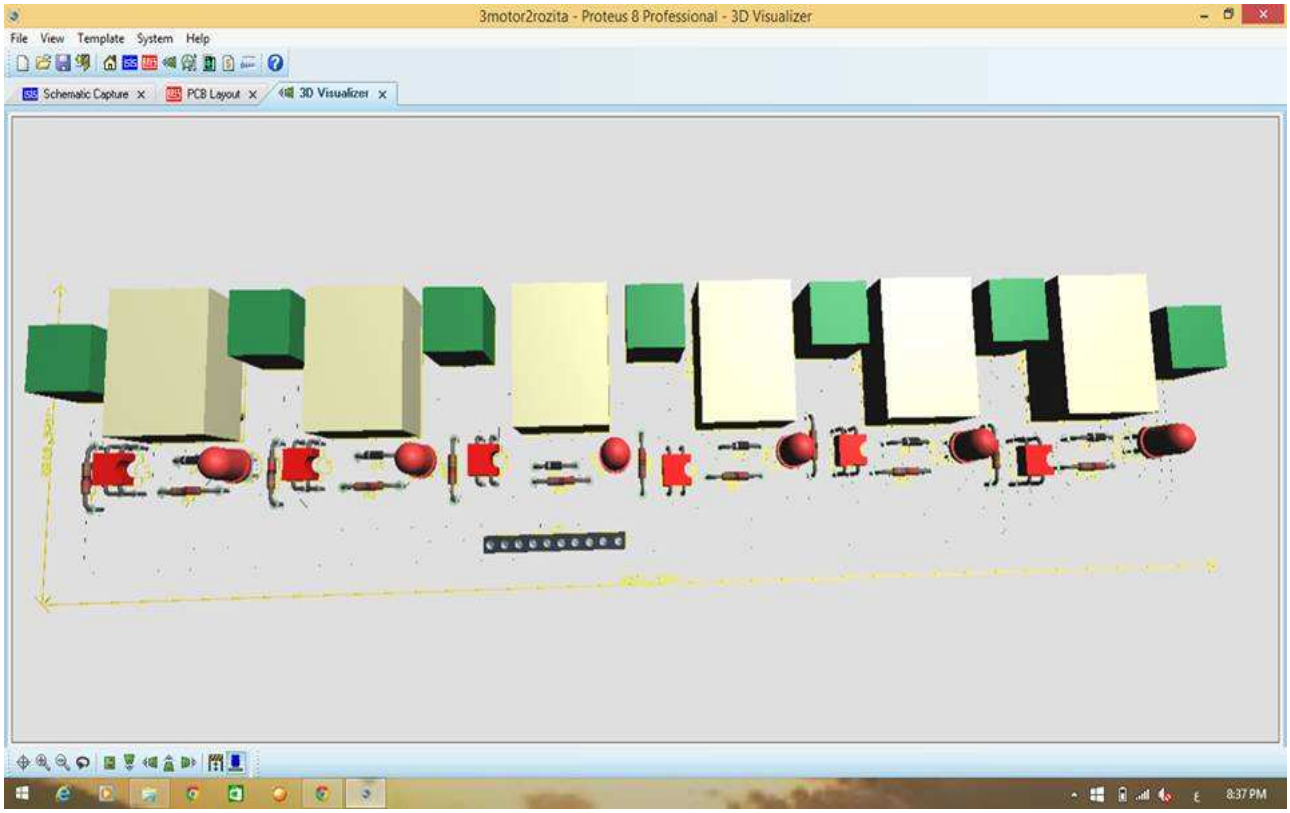
3motor2rozita - Proteus 8 Professional - 3D Visualizer
File View Template System Help
Schematic Capture
PCB Layout
3D Visualizer
8:37 PM

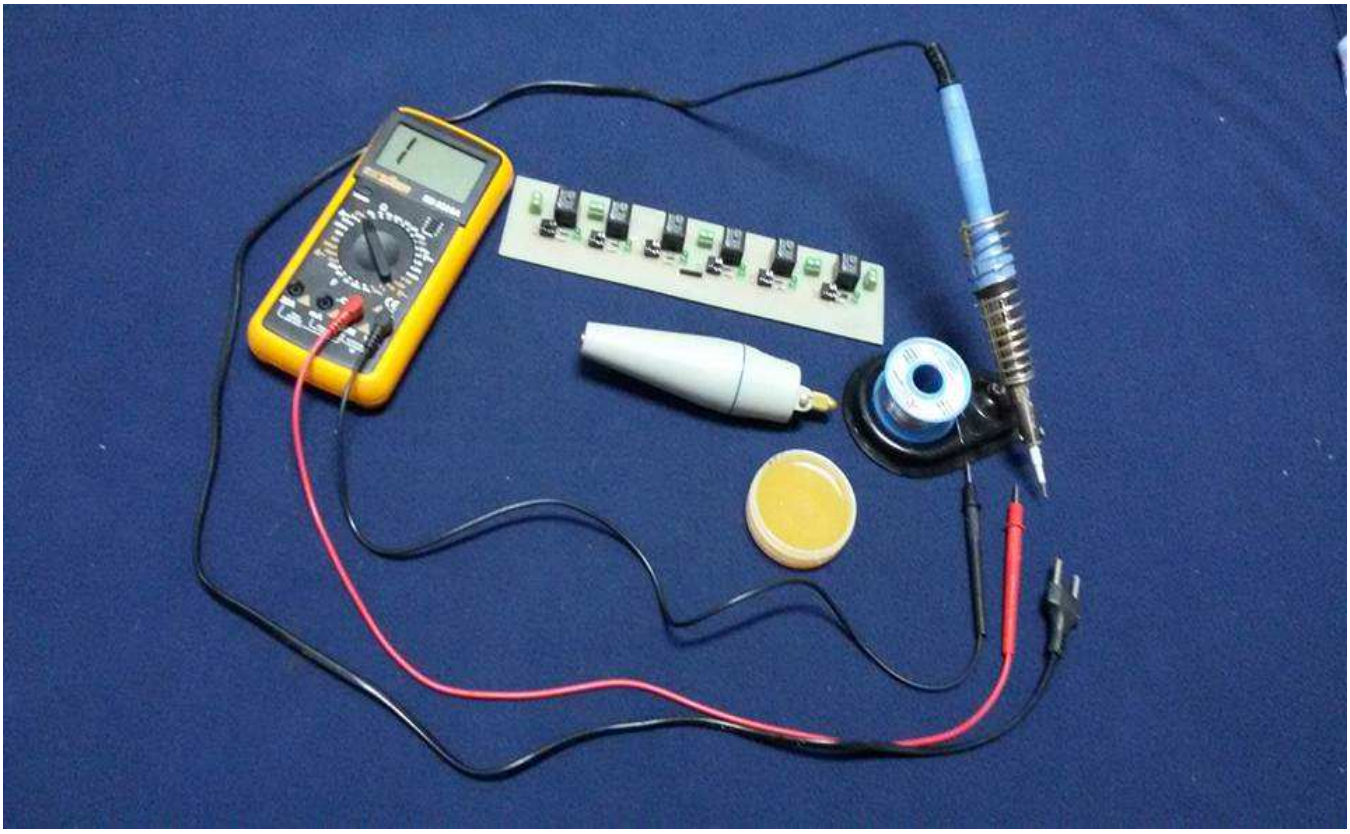

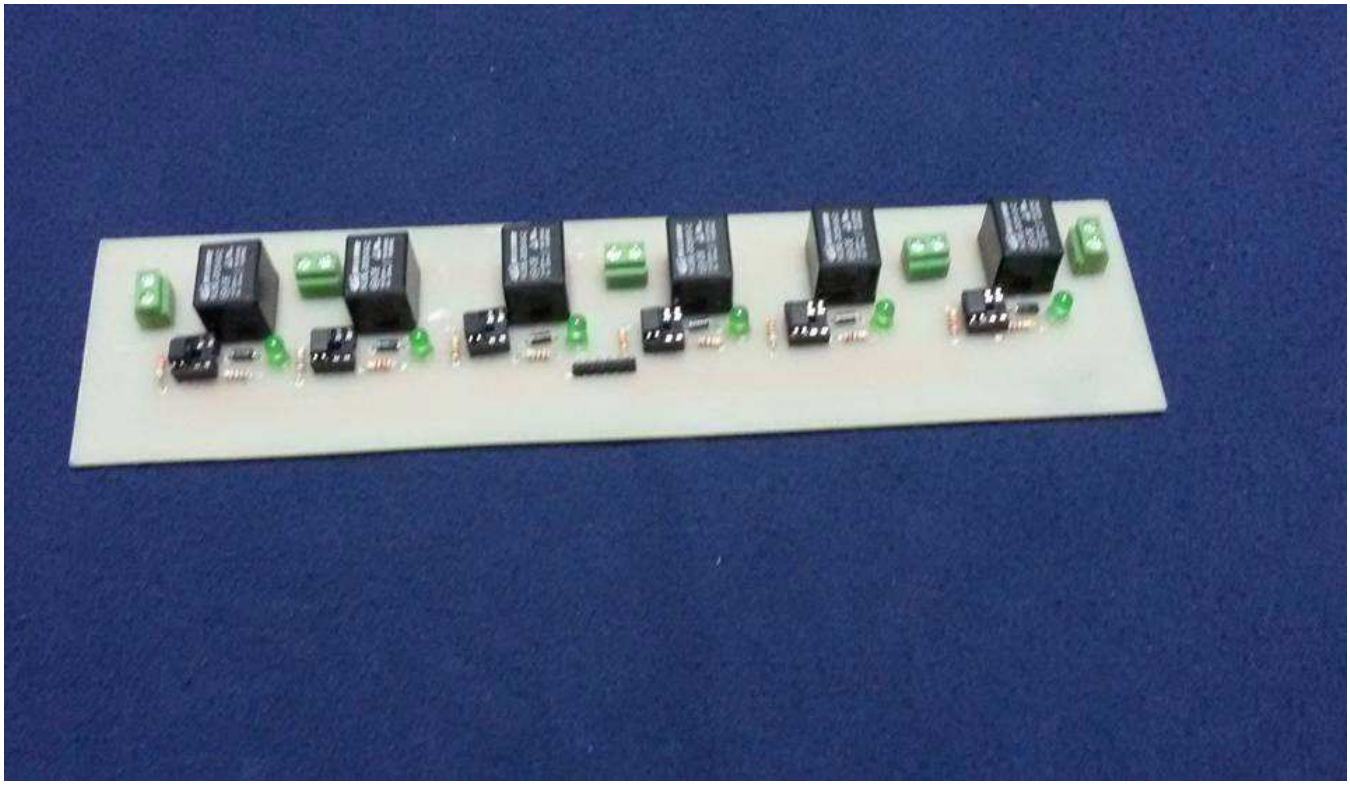

chapter 3

Programming

3.1 control

control of motion depends on joy stick and ardieno uno