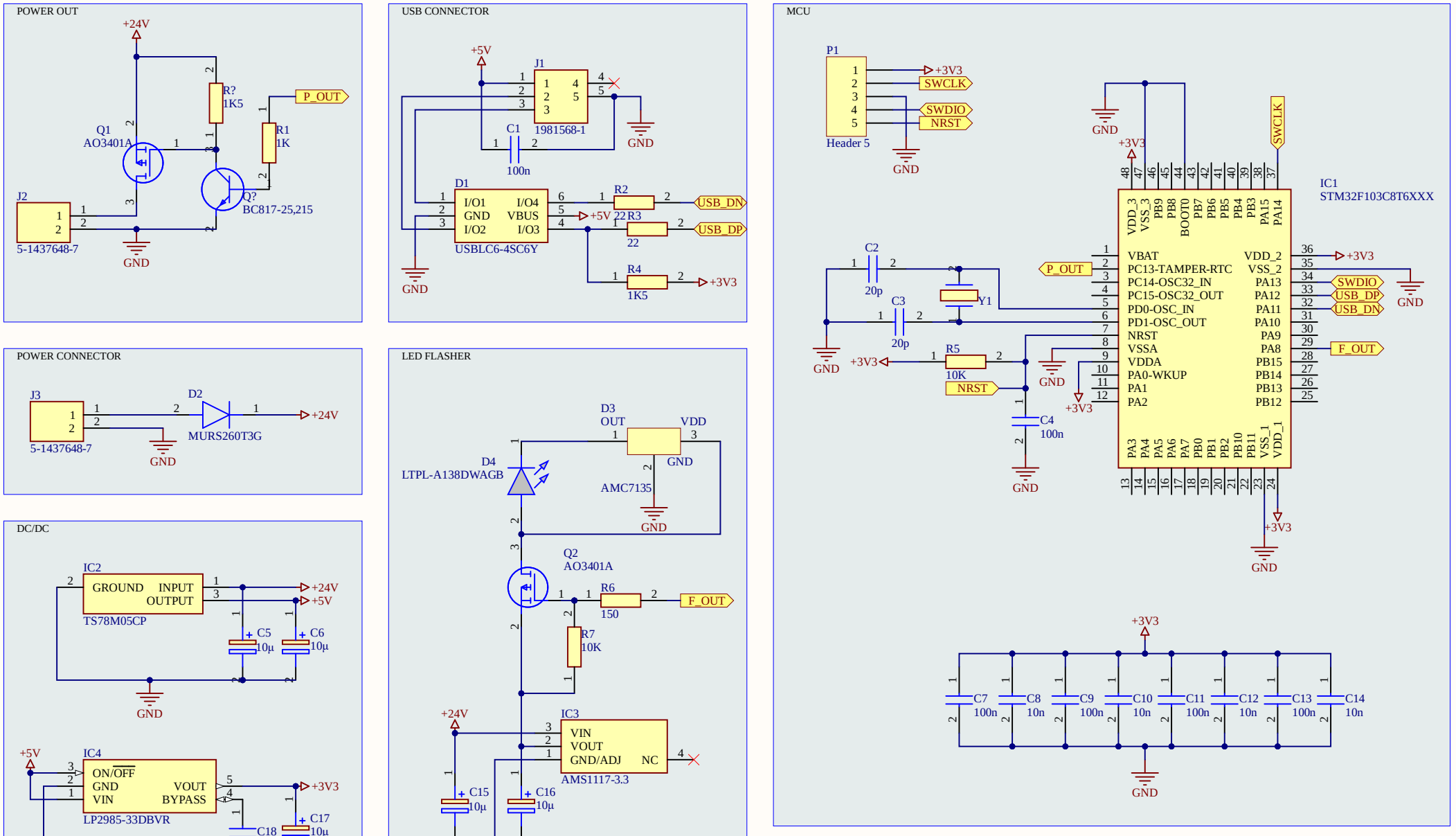

Title		
Size A4	Number	Revision
Date: 2.10.2024		Sheet of
File: C:\Stroboscope\Hardware\Sch.SchDoc		Drawn By: