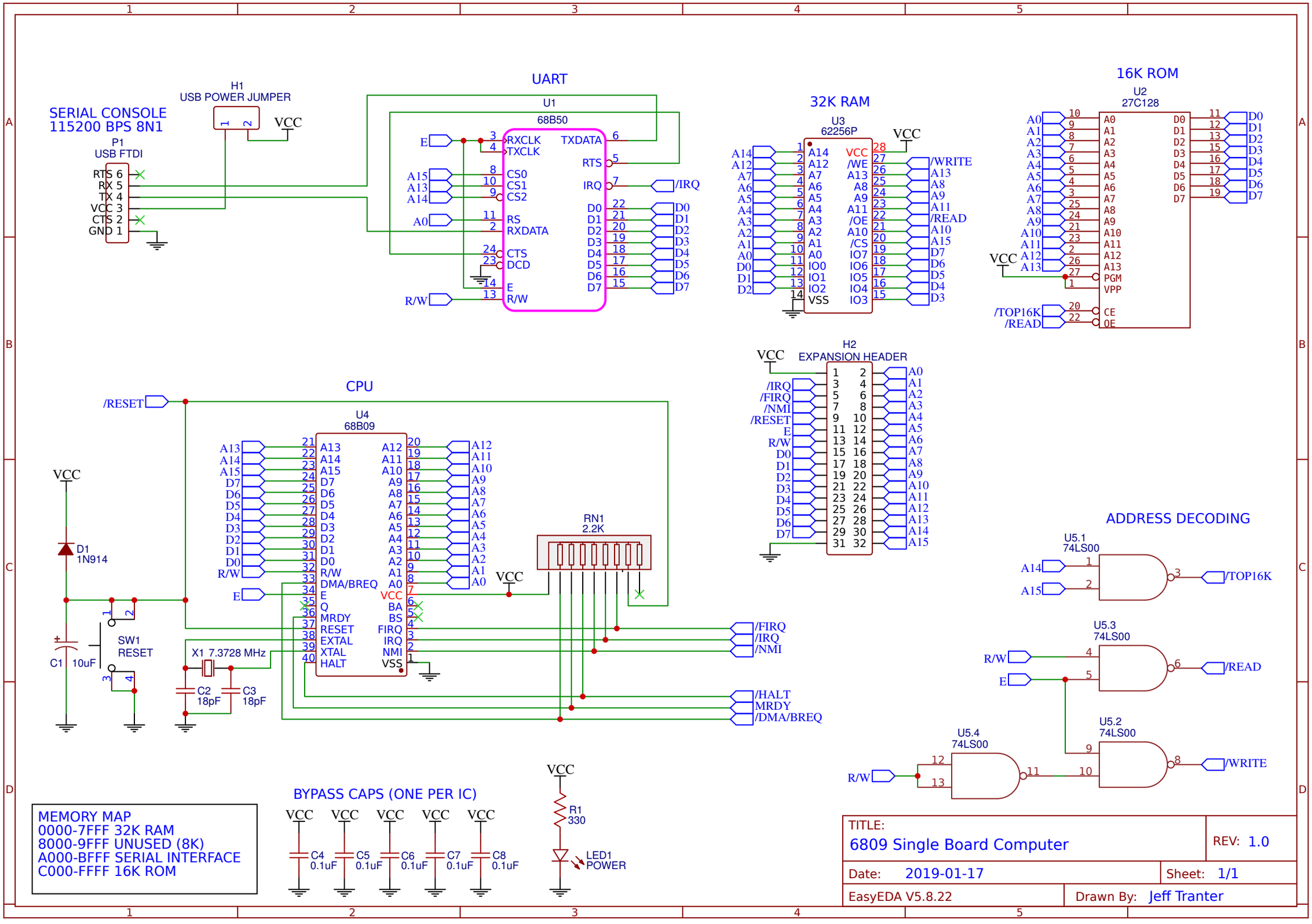
SERIAL CONSOLE
115200 BPS 8N1
P1
USB FTDI
RTS 6
RX 5
TX 4
VCC 3
CTS 2
GND 1
H1
USB POWER JUMPER
VCC
UART
U1
68B50
RXCLK
TXCLK
TXDATA
RTS
IRQ
CS0
CS1
CS2
RS
RXDATA
CTS
DCD
E
R/W
D0
D1
D2
D3
D4
D5
D6
D7
/IRQ
32K RAM
U3
62256P
A14
A12
A7
A6
A5
A4
A3
A2
A1
A0
IO0
IO1
IO2
VSS
VCC
/WE
A13
A8
A9
A11
/OE
A10
/CS
IO7
IO6
IO5
IO4
IO3
/WRITE
/READ
16K ROM
U2
27C128
PGM
VPP
CE
OE
/TOP16K
/READ
CPU
U4
68B09
/RESET
DMA/BREQ
Q
MRDY
RESET
EXTAL
XTAL
HALT
BA
BS
FIRQ
NMI
/FIRQ
/IRQ
/NMI
/HALT
MRDY
/DMA/BREQ
D1
1N914
C1
10uF
SW1
RESET
X1 7.3728 MHz
C2
18pF
C3
18pF
RN1
2.2K
H2
EXPANSION HEADER
ADDRESS DECODING
U5.1
74LS00
/TOP16K
U5.3
74LS00
/READ
U5.2
74LS00
/WRITE
U5.4
74LS00
BYPASS CAPS (ONE PER IC)
C4
0.1uF
C5
0.1uF
C6
0.1uF
C7
0.1uF
C8
0.1uF
R1
330
LED1
POWER
MEMORY MAP
0000-7FFF 32K RAM
8000-9FFF UNUSED (8K)
A000-BFFF SERIAL INTERFACE
C000-FFFF 16K ROM
TITLE:
6809 Single Board Computer
REV: 1.0
Date: 2019-01-17
Sheet: 1/1
EasyEDA V5.8.22
Drawn By: Jeff Tranter