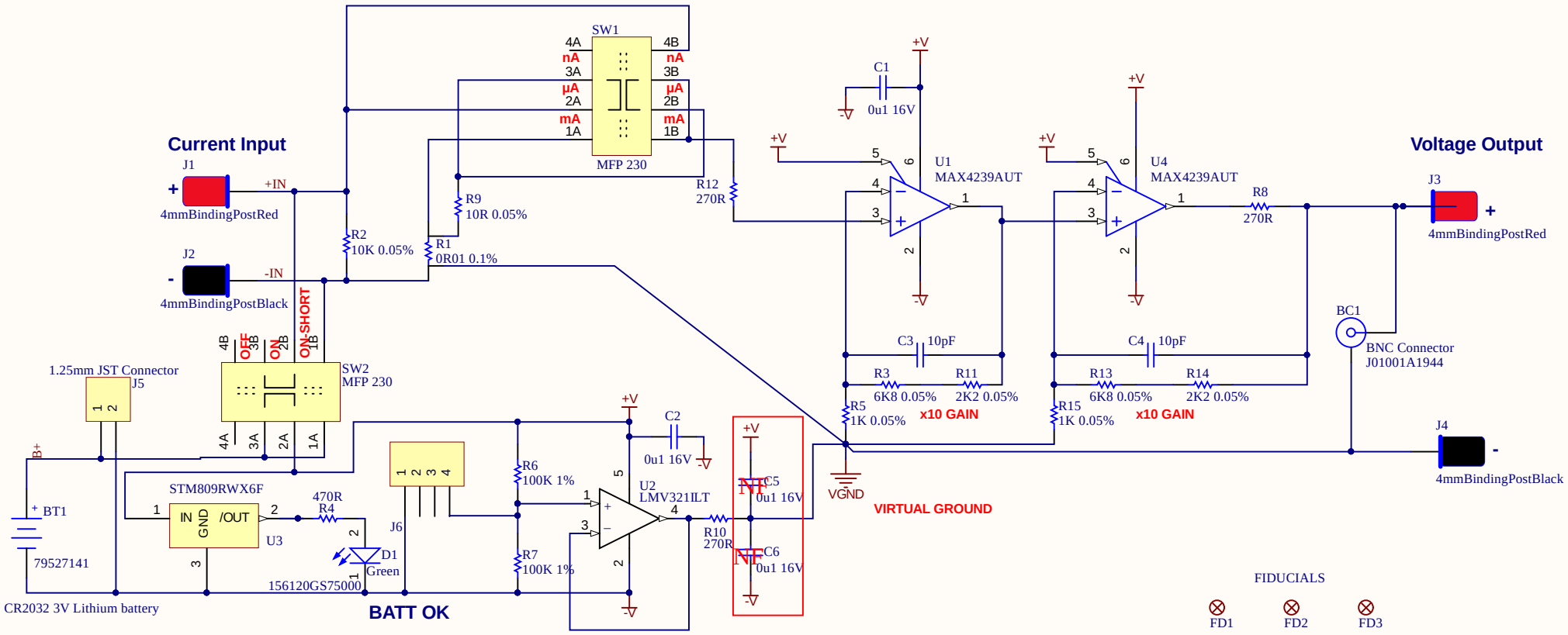

Title	**tinyCurrent**	
Size A4	Number **www.n-fuse.co**	Revision **1**
Date: 9/9/2018	Sheet of	
File: \\..\tinyCurrent_Version1.SchDoc	Drawn By:	