View from Top side (Scale 1:1)

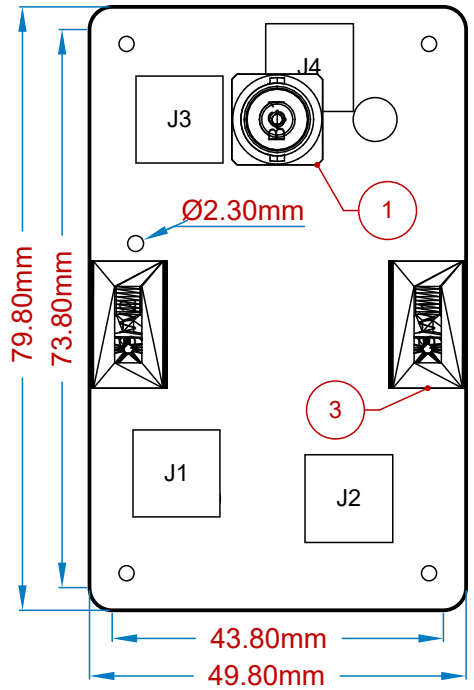

View from Bottom side (Scale 1:1)

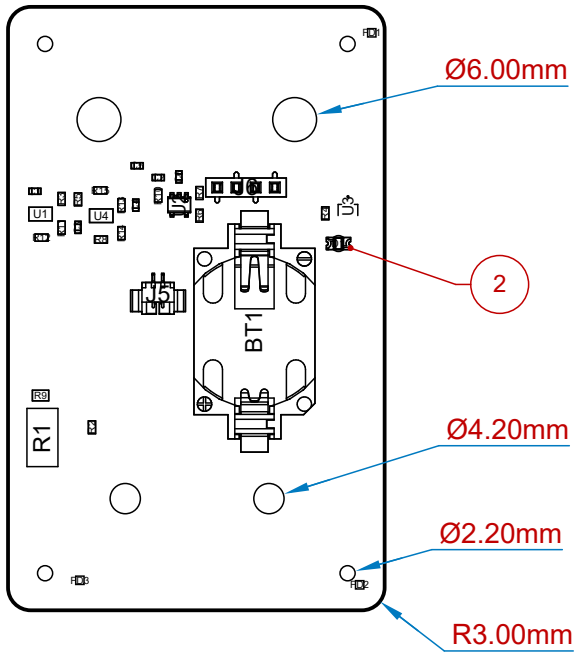

Drill Table

Symbol	Count	Hole Size	Plated	Hole Tolerance
☆	4	0.40mm	Plated	None
□	16	1.00mm	Plated	None
✧	1	1.05mm	Plated	None
☆	4	1.35mm	Plated	None
✞	4	2.20mm	Non-Plated	None
◇	1	2.30mm	Non-Plated	None
✕	2	4.20mm	Plated	None
○	2	6.00mm	Plated	None
	34 Total			

Notes:

1. Bayonet pins vertically aligned
2. LED Reverse mounted
3. Embossed label on the switch side oriented towards the middle

Layer Stack Legend

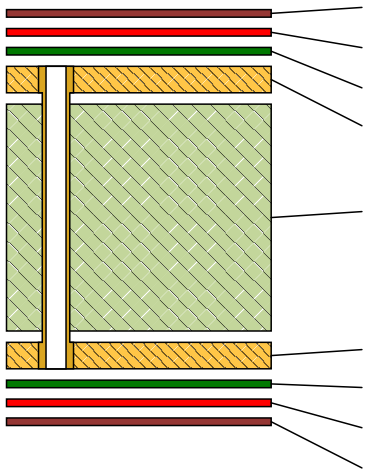

Material	Layer	Thickness	Dielectric Material	Type	Gerber
	Top Paste			Paste Mask	GTP
	Top Overlay			Legend	GTO
Surface Material	Top Solder	0.01mm	Solder Resist	Solder Mask	GTS
Copper	Top Layer	0.04mm		Signal	GTL
		1.55mm	*FR-4*	*Dielectric*	
Copper	Bottom Layer	0.04mm		Signal	GBL
Surface Material	Bottom Solder	0.01mm	Solder Resist	Solder Mask	GBS
	Bottom Overlay			Legend	GBO
	Bottom Paste			Paste Mask	GBP

Total thickness: 1.64mm