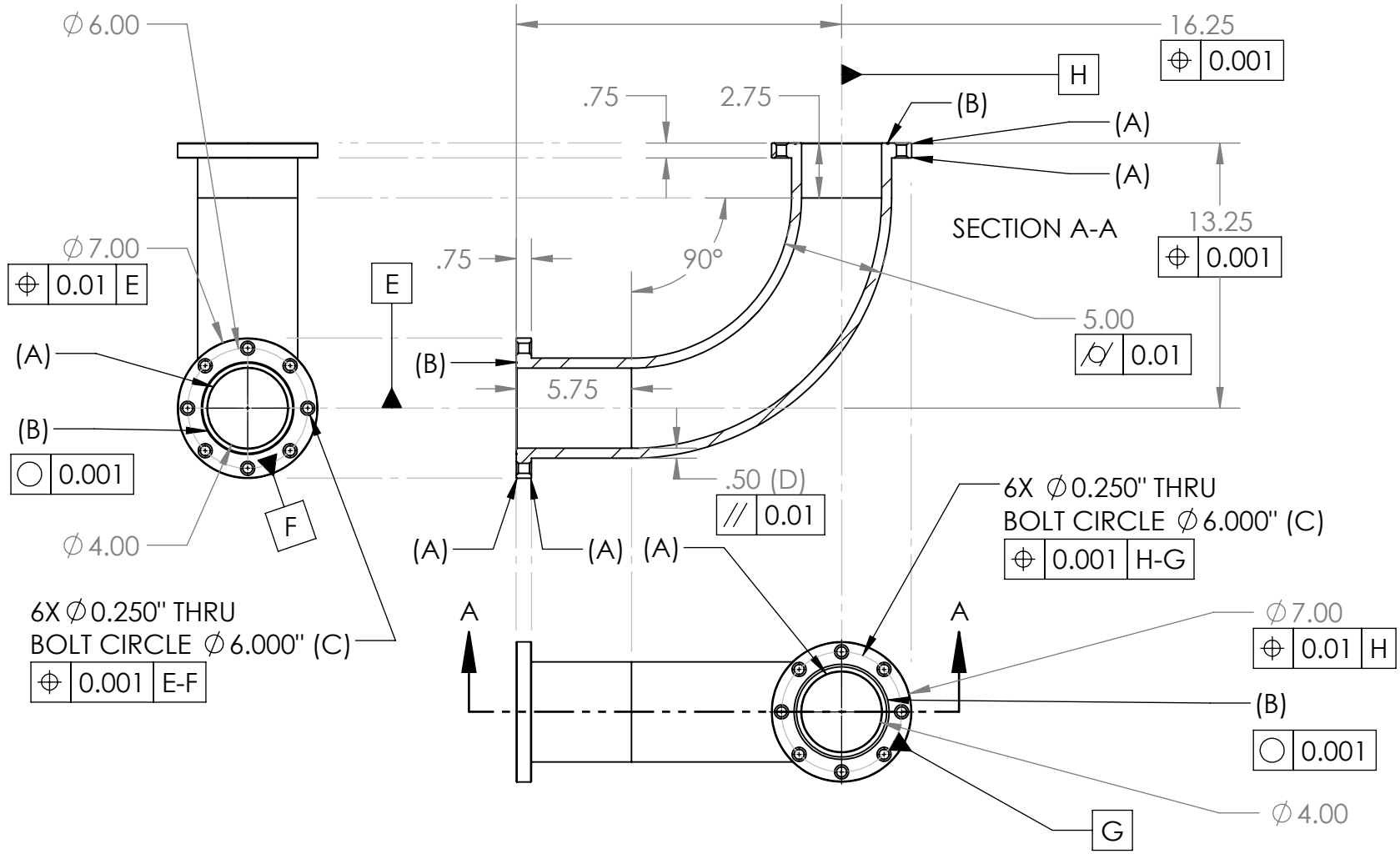

		UNLESS OTHERWISE SPECIFIED:		NAME	DATE
		DIMENSIONS ARE IN INCHES TOLERANCES: LINEAR: ± 0.001" ANGULAR (MACHINED): ± 0.001° ANGULAR (BENT): ± 0.1°	DRAWN	ALAN L.	07/31/2025
			CHECKED	N/A	N/A
			ENG APPR.	N/A	N/A
			MFG APPR.	N/A	N/A
		GEOMETRIC TOLERANCING INTERPRETED PER ASME Y14.5-2009	Q.A.	N/A	N/A
		MATERIAL ASTM A106 GRADE B	COMMENTS: (A) - 1/32" x 45° CHAMFER (B) - 1/16" W x 1/16" DEEP x R4.625" CIRCULAR CX GASKET GROOVE CONCENTRIC WITH DATUM E OR H (C) - 0.100" X 45° CHAMFER (D) WALL THICKNESS UNIFORM		
NEXT ASSY	USED ON	FINISH FLANGES - AS MACHINED OTHER - AS FABRICATED			
APPLICATION		DO NOT SCALE DRAWING			

TITLE:

4" FLANGED PIPE 90° ELBOW

SIZE	DWG. NO.	REV
A	1	001

SCALE: 1:8 | WEIGHT: 56.96 LB | SHEET 1 OF 1

PROPRIETARY AND CONFIDENTIAL

THE INFORMATION CONTAINED IN THIS DRAWING IS THE SOLE PROPERTY OF ALAN C. LONGFELLOW. ANY REPRODUCTION IN PART OR AS A WHOLE WITHOUT THE WRITTEN PERMISSION OF ALAN C. LONGFELLOW IS PROHIBITED.

SOLIDWORKS Maker Product. For Personal Use Only.