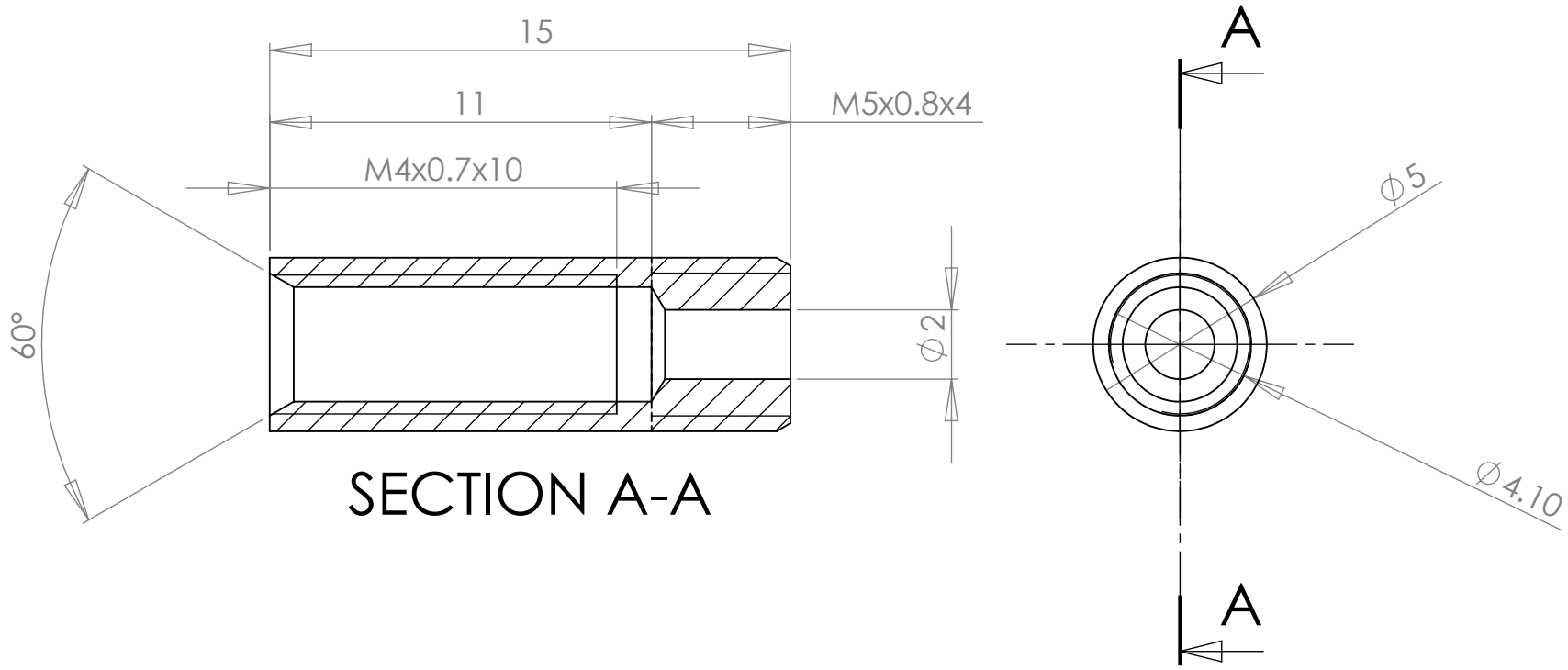

UNLESS OTHERWISE SPECIFIED: DIMENSIONS ARE IN MILLIMETERS SURFACE FINISH: TOLERANCES: LINEAR: ANGULAR:	FINISH:			DEBUR AND BREAK SHARP EDGES	DO NOT SCALE DRAWING	REVISION 2
	NAME	SIGNATURE	DATE		TITLE:	
DRAWN	JMG		01.08.11			
CHK'D						
APPV'D						
MFG						
Q.A				MATERIAL: BRASS	DWG NO. bowden-end	A4
				WEIGHT:	SCALE:5:1	SHEET 1 OF 1