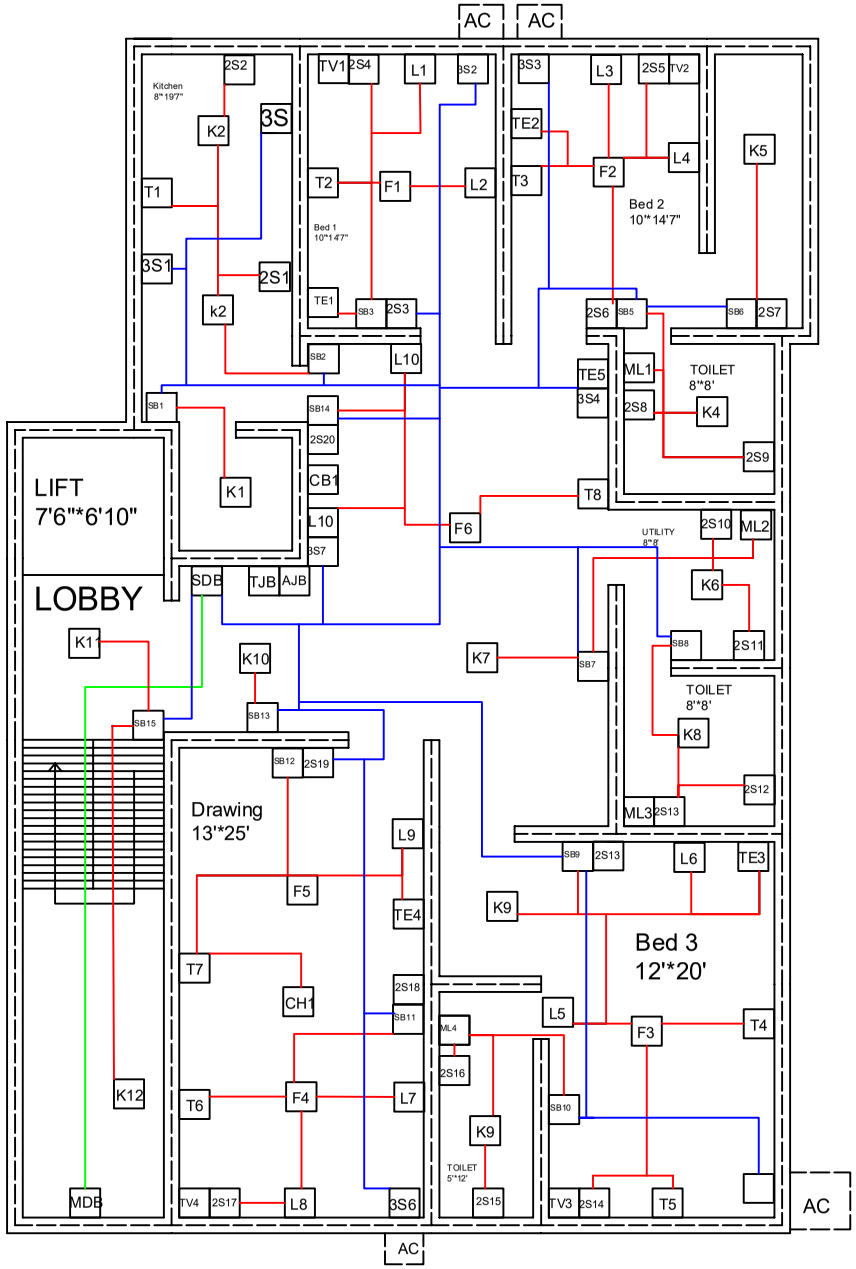

Green - Heavy load
Blue - Medium load
Red - Light load

Md Sadi Al Huda
Id: 20-43129-1