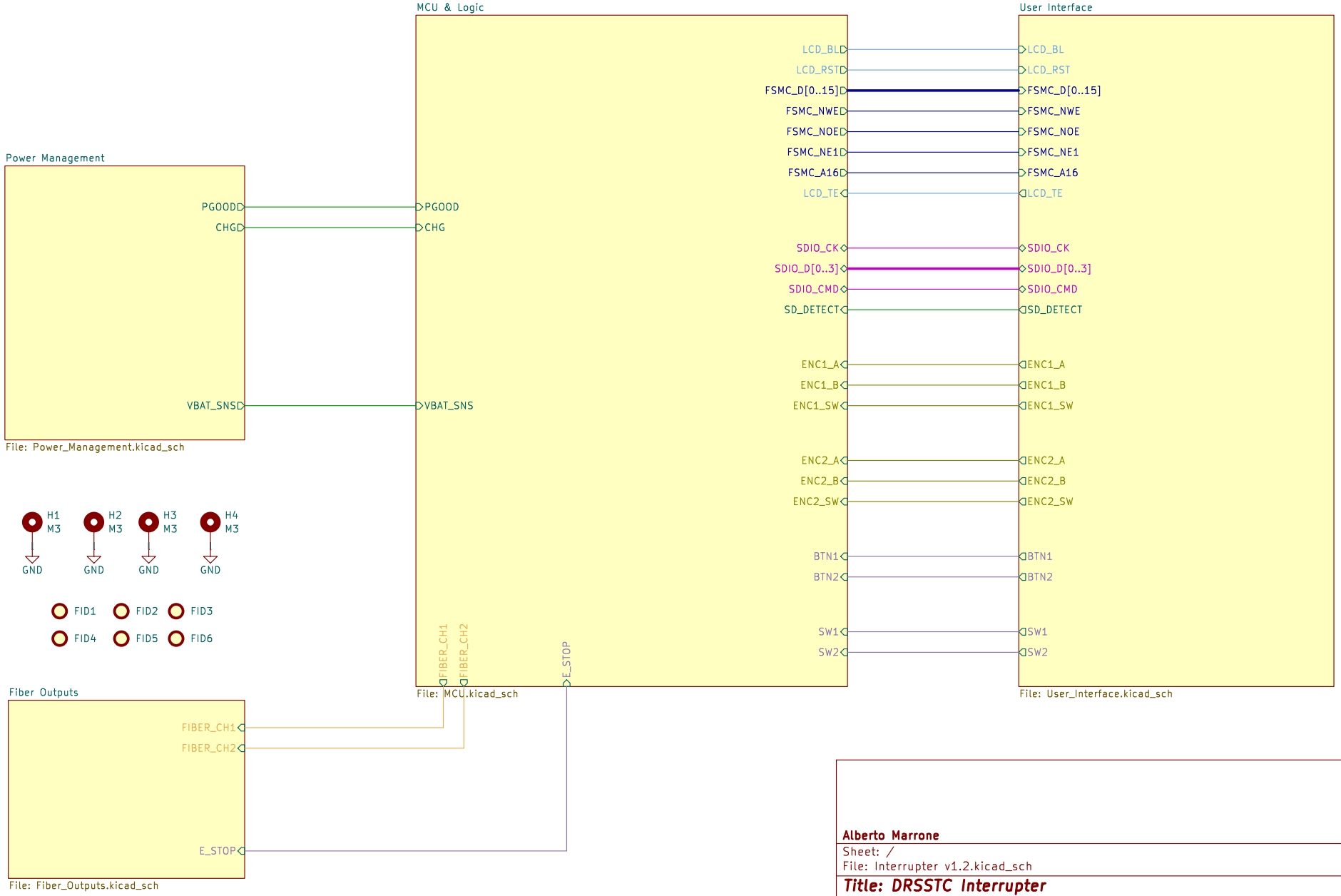

Alberto Marrone

Sheet: /
File: Interrupter v1.2.kicad_sch

Title: DRSSTC Interrupter

Size: A4	Date: 2026-02-20	**Rev: v1.1**
KiCad E.D.A. 9.0.7		Id: 1/5

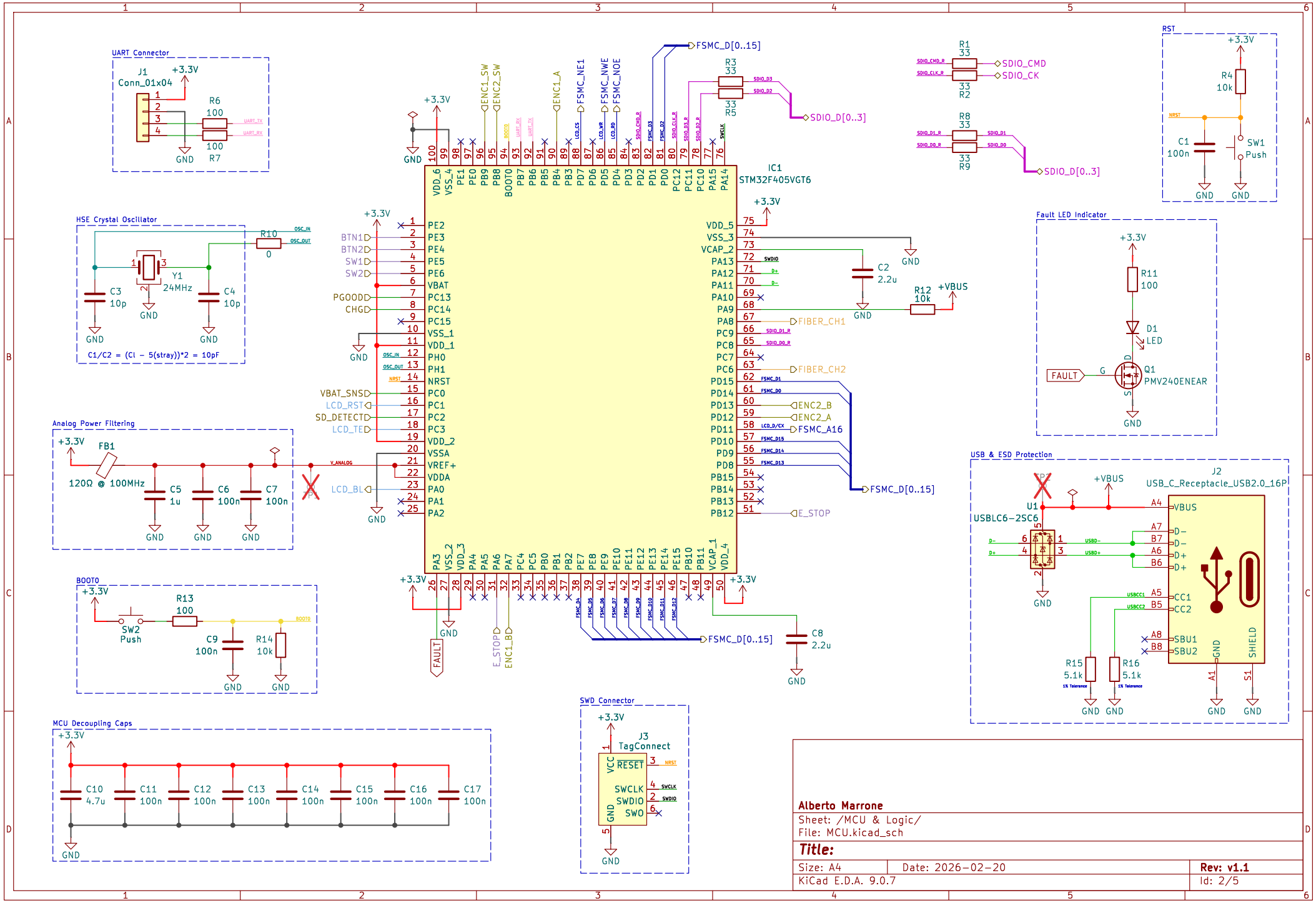

Alberto Marrone

Sheet: /MCU & Logic/

File: MCU.kicad_sch

Title:

Size: A4	Date: 2026-02-20	Rev: v1.1
KiCad E.D.A. 9.0.7		Id: 2/5

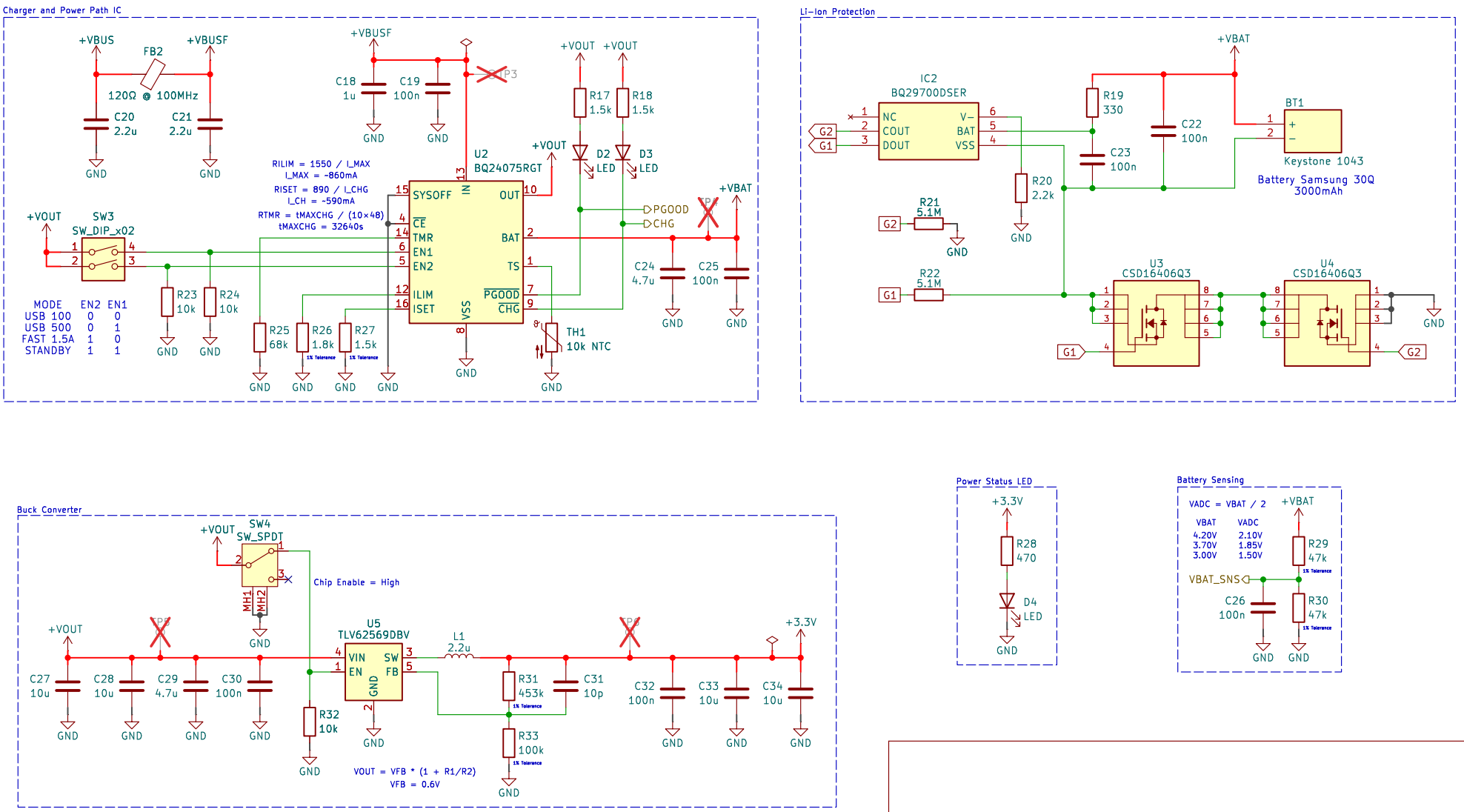

Alberto Marrone

Sheet: /Power Management/

File: Power_Management.kicad_sch

Title:

Size: A4	Date: 2026-02-20	**Rev: v1.1**
KiCad E.D.A. 9.0.7		Id: 3/5

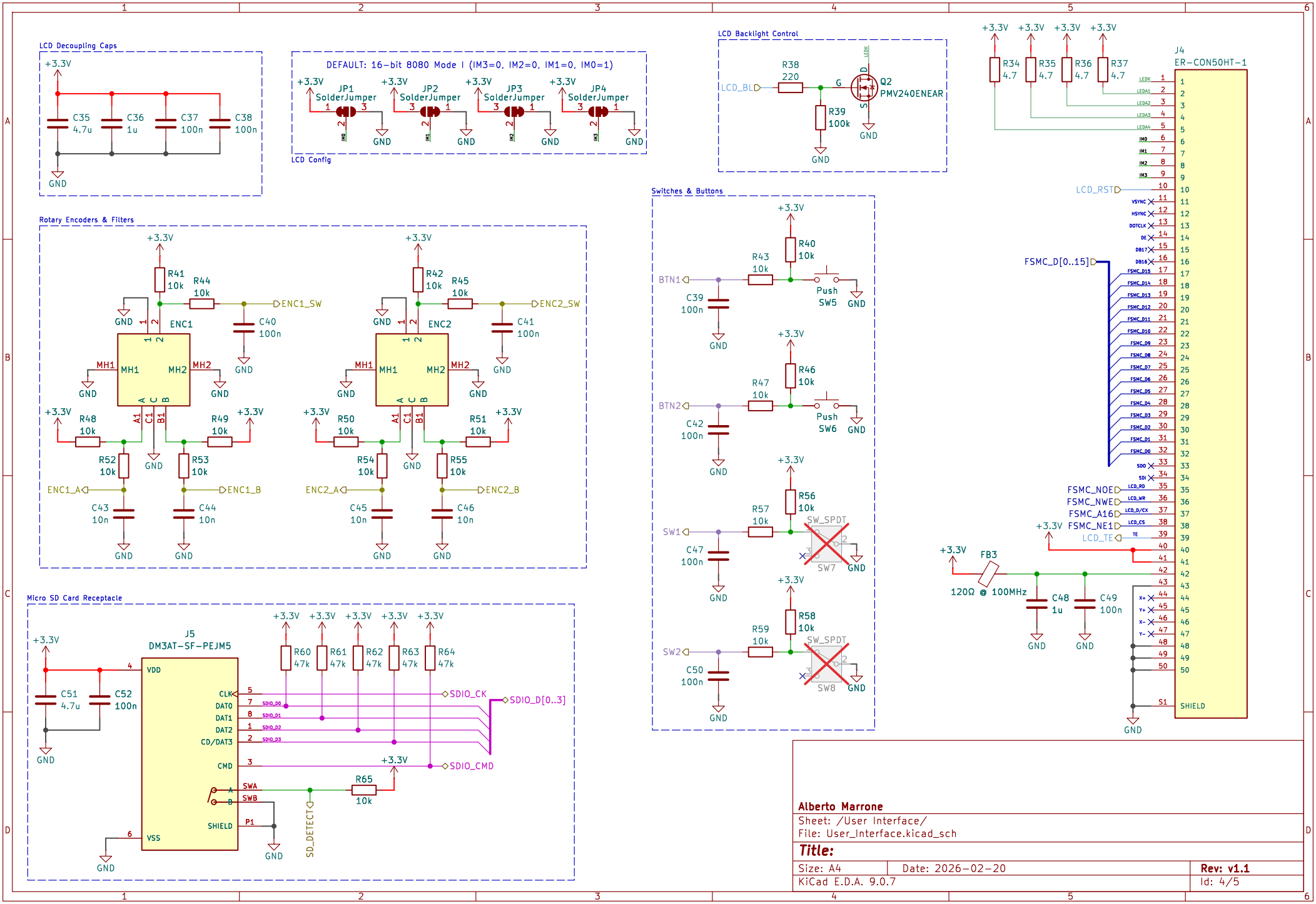

Alberto Marrone

Sheet: /User Interface/

File: User_Interface.kicad_sch

Title:

Size: A4	Date: 2026-02-20	**Rev: v1.1**
KiCad E.D.A. 9.0.7		Id: 4/5

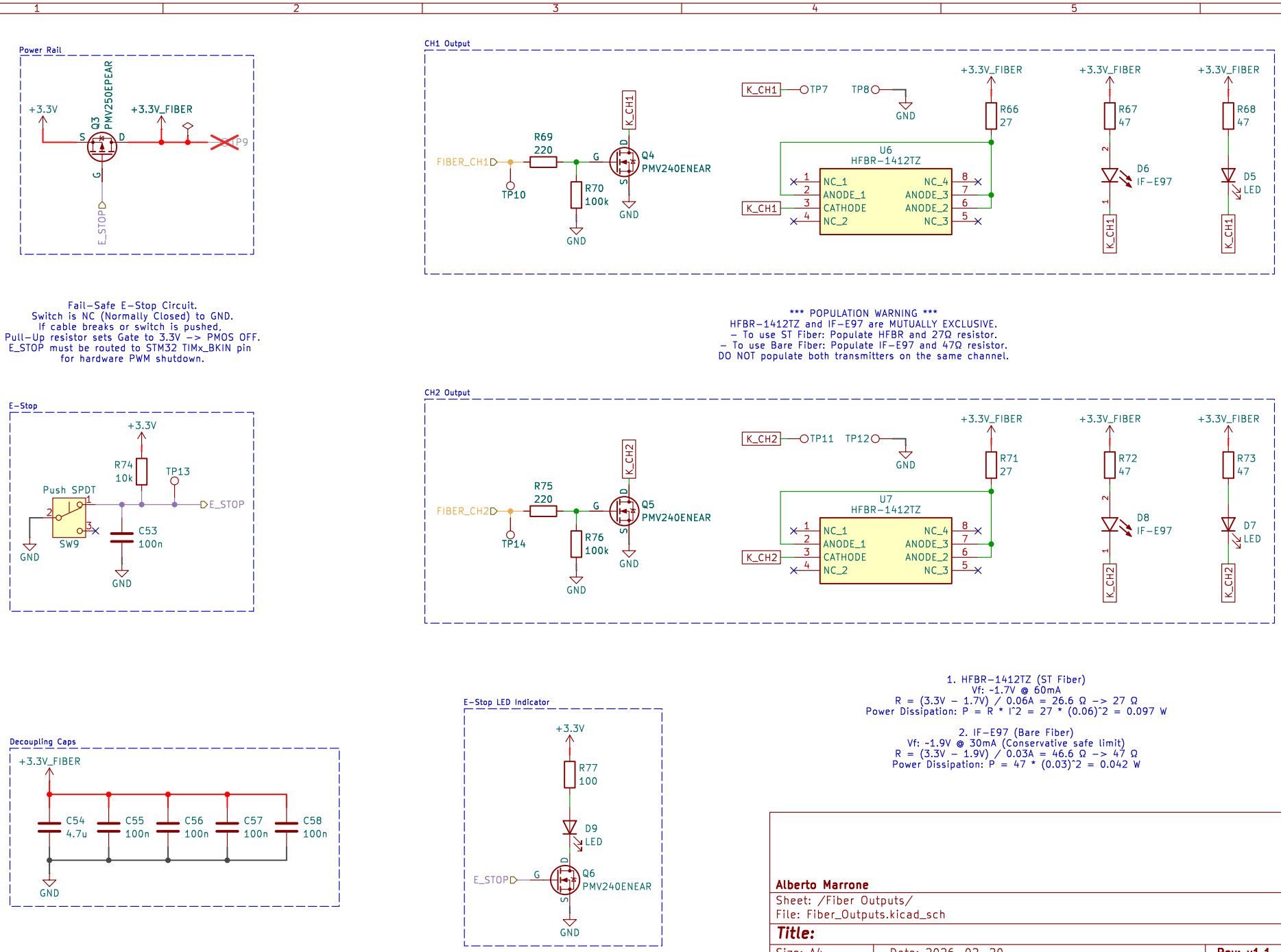
Power Rail
+3.3V
Q3
PMV250EPEAR
+3.3V_FIBER
S
D
G
E_STOP
CH1 Output
FIBER_CH1
TP10
R69
220
R70
100k
GND
K_CH1
Q4
PMV240ENEAR
TP7
TP8
+3.3V_FIBER
R66
27
R67
47
R68
47
U6
HFBR-1412TZ
NC_1
ANODE_1
CATHODE
NC_2
NC_4
ANODE_3
ANODE_2
NC_3
D6
IF-E97
D5
LED
Fail-Safe E-Stop Circuit.
Switch is NC (Normally Closed) to GND.
If cable breaks or switch is pushed,
Pull-Up resistor sets Gate to 3.3V -> PMOS OFF.
E_STOP must be routed to STM32 TIMx_BKIN pin
for hardware PWM shutdown.
*** POPULATION WARNING ***
HFBR-1412TZ and IF-E97 are MUTUALLY EXCLUSIVE.
- To use ST Fiber: Populate HFBR and 27Ω resistor.
- To use Bare Fiber: Populate IF-E97 and 47Ω resistor.
DO NOT populate both transmitters on the same channel.
E-Stop
+3.3V
R74
10k
TP13
Push SPDT
SW9
C53
100n
GND
CH2 Output
FIBER_CH2
TP14
R75
220
R76
100k
K_CH2
Q5
PMV240ENEAR
TP11
TP12
R71
27
R72
47
R73
47
U7
HFBR-1412TZ
D8
IF-E97
D7
LED
Decoupling Caps
C54
4.7u
C55
100n
C56
100n
C57
100n
C58
100n
E-Stop LED Indicator
R77
100
D9
LED
Q6
PMV240ENEAR
1. HFBR-1412TZ (ST Fiber)
Vf: ~1.7V @ 60mA
R = (3.3V - 1.7V) / 0.06A = 26.6 Ω -> 27 Ω
Power Dissipation: P = R * I^2 = 27 * (0.06)^2 = 0.097 W
2. IF-E97 (Bare Fiber)
Vf: ~1.9V @ 30mA (Conservative safe limit)
R = (3.3V - 1.9V) / 0.03A = 46.6 Ω -> 47 Ω
Power Dissipation: P = 47 * (0.03)^2 = 0.042 W
Alberto Marrone
Sheet: /Fiber Outputs/
File: Fiber_Outputs.kicad_sch
Title:
Size: A4
Date: 2026-02-20
Rev: v1.1
KiCad E.D.A. 9.0.7
Id: 5/5